Box 2-8

HUGHES

SANTA BARBARA RESEARCH CENTER
a subsidiary

5 December 1991

In reply refer to: DM LE46-0017

Orbital Science Corporation
Space Systems Division
14119 Sullyfield Circle
P.O. BOX 10840
Chantilly, Virginia 22021

Attention: Mr. Michael R. Long, Contracts/Subcontracts Adminstrator

Subject: Submittal of Critical Design Review (CDR) Data Package, CDRL 006

Reference: OSC 9105-SW

In accordance with the requirements of the subject contract, SBRC encloses five (5) copies of the Critical Design Review (CDR) Data Package.

If you have any questions, please call Mr. R. L. Roberts, (805) 562-7168 for technical information. Please direct all other questions to me at (805)562-7817.

SANTA BARBARA RESEARCH CENTER

Cordially,

R. H. Hogan

R. H. Hogan
Manager, Major Programs Contracts

RHH/ta

Enclosure

cc: K. Lyon

SANTA BARBARA RESEARCH CENTER
75 Coromar Drive
Goleta, CA 93117
(805) 968-3511

(REFERENCE: SBRC DATA MANAGEMENT PRACTICE NO. 5-3-6-3)

HUGHES
SANTA BARBARA RESEARCH CENTER
a subsidiary

CONTRACT DATA ITEM INSPECTION RECORD

								DM NO. 1	LE46-0017
PROGRAM NAME 2	SEAWIFS	W.A. NO. 3	LE46	CONTRACT NO. 4	OSC 9105-SW	CLIN 5		CDRL SEQ. NO. 6	006
DATA ITEM NO. 7		DATA ITEM TITLE 8	CRITICAL DESIGN REVIEW (CDR) DATA PACKAGE					SCDRL NO. 9	

10

TO MEET CONTRACT REQUIREMENTS, DATA MUST BE APPROVED NO LATER THAN:
DATE: _____

REVIEWER 11	APPRVD 12	DISAPPRVD	SIGNATURE 13	DATE 14
ORIGINATOR A. HOLMES	✓		Alan Holmes	12/10/91
CONTRACTS B. HOGAN	✓		R. B. Hogan	12/3/91
PROGRAM MANAGER R. L. ROBERTS			[illegible]	12/8/91

COMMENTS: 15

☐ CONTINUED ON REVERSE SIDE

DISCREPANCIES: 16

☐ CONTINUED ON REVERSE SIDE

EVIDENCE OF INSPECTION 17

THE SIGNATURE BELOW IS EVIDENCE OF INSPECTION FOR PROPER TECHNICAL CONTENT, LEGIBILITY, FORMAT, IDENTIFICATION, RIGHTS-IN-DATA, AND SECURITY CLASSIFICATION MARKINGS, CORRECTION OF PRIOR DISCREPANCIES OR NONCONFORMANCES, AND ALL OTHER CONTRACT REQUIREMENTS FOR THE ABOVE DESCRIBED DATA ITEM.

CUSTOMER APPROVAL REQUIRED YES ☐ NO ☒ DATE CUSTOMER APPROVAL RECEIVED: _____

SOURCE INSPECTION REQUIRED YES ☐ NO ☒ FINAL SHIPMENT/"Z" DD250: YES ☐ NO ☒

DD FORM 250 REQUIRED YES ☐ NO ☒

CONTRACT DATA MANAGER: TERESA APODACA SIGNATURE: Teresa Apodaca DATE: 12/6/91

SeaWiFS
CRITICAL DESIGN REVIEW

DECEMBER 18 AND 19, 1991

HUGHES

SANTA BARBARA RESEARCH CENTER
a subsidiary

12/91
91-0838-0

WEDNESDAY 18 DECEMBER
AGENDA

HUGHES

SANTA BARBARA RESEARCH CENTER
a subsidiary

INTRODUCTION	DICK ROBERTS	8:30
PROGRAM SUMMARY		
INSTRUMENT OVERVIEW	ALAN HOLMES	8:45
SYSTEM ANALYSIS		
BREAK		10:00
OPTICAL DESIGN & ANALYSIS	GARY MOORE	10:15
SCANNER MECHANICAL DESIGN	BILL FINCHER	11:15
LUNCH		12:00
SCANNER		
BEARING ANALYSIS	JOHN BOHNER	12:45
STRUCTURAL ANALYSIS	JACK BROOKS	1:00
THERMAL ANALYSIS	PAUL BORTFELDT	1:30
MECHANISMS: DESIGN & CONTROL	RON CUBALCHINI	2:00
BREAK		3:00
ELECTRONICS DESIGN	DAVE ROGERS	3:15
ADJOURN		5:30

11/91
91-0838-1

THURSDAY 19 DECEMBER AGENDA

HUGHES
SANTA BARBARA RESEARCH CENTER
a subsidiary

ELECTRONICS MODULE		
PACKAGING	STEVE HERNANDEZ	8:30
MECHANICAL ANALYSIS	PAUL BORTFELDT	9:00
THERMAL ANALYSIS		
BREAK		10:00
RELIABILITY	GEORGE GRITT	10:15
TEST EQUIPMENT	JIM KANE	10:45
LUNCH		11:30
CALIBRATION	RICK SHADFORTH	12:30
CONCLUSIONS	DICK ROBERTS	1:45
BREAK		2:00
SEASTAR INTERFACES	TOMAS SVITEK (OSC)	2:15
ADJOURN		3:30

11/91
91-0838-2

INTRODUCTION

RICHARD ROBERTS

11/91
91-0838-3

CRITICAL DESIGN REVIEW OBJECTIVES

HUGHES

SANTA BARBARA RESEARCH CENTER
a subsidiary

- REVIEW DETAIL DESIGNS FOR:
  - SCANNER
  - ELECTRONICS MODULE
- REVIEW DESIGN ANALYSIS AND PERFORMANCE PREDICTIONS
- REVIEW TEST RESULTS

SeaStar
NASA OCEAN COLOR DATA

HUGHES
SANTA BARBARA RESEARCH CENTER
a subsidiary

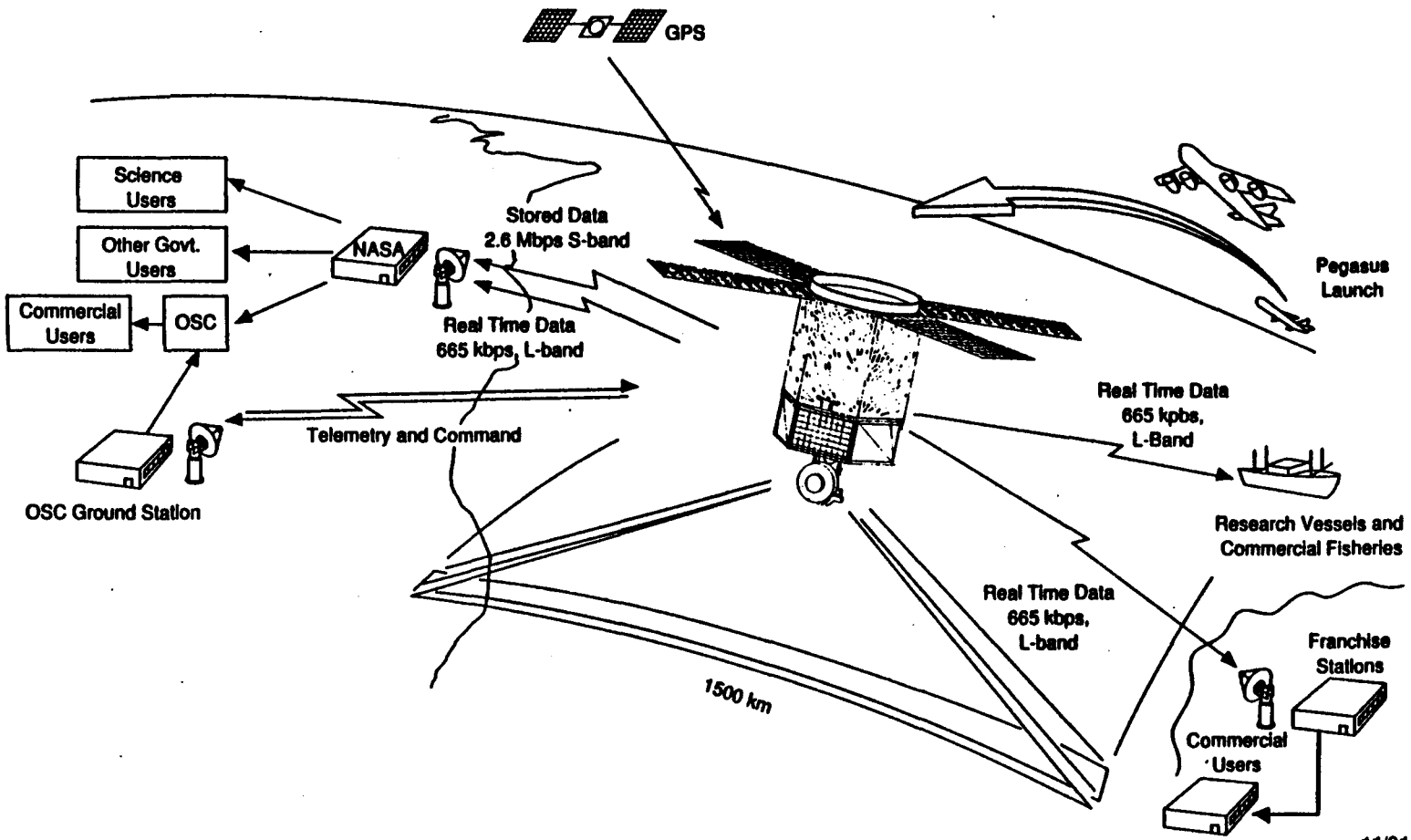

11/91
91-0838-5

OCEAN COLOR USER COMMUNITY DESIGN DRIVERS

HUGHES

SANTA BARBARA RESEARCH CENTER
a subsidiary

- HRPT DATA TRANSMISSION FORMAT
  - SETS IFOV AT 1.13 KM (1.6 MR)
  - SET SCAN RATE AT SIX LINES/SEC
- DAILY REVISIT
  - ± 58.3° SCAN
  - LIMITS FPA DESIGN TO ONE DETECTOR PER BAND ALONG TRACK
- SNRs BETWEEN 447 AND 667
  - FOUR DETECTORS IN TDI PER BAND
- <2% POLARIZATION SENSITIVITY
  - ELIMINATES USE OF ROTATING SCAN MIRROR - LEADS TO ROTATING TELESCOPE
- -20°, +20° FORE AND AFT VIEW TO AVOID SUN GLINT

SeaWiFS BASELINE INSTRUMENT PARAMETERS

HUGHES

SANTA BARBARA RESEARCH CENTER
a subsidiary

ORBIT	705 km, DESCENDING, CALIBRATE OVER SOUTH POLE
SWATH	±58.3° x 1.6 mr
SCAN	CONTINUOUSLY ROTATING TELESCOPE, 6 rps, WITH CONTINUOUSLY ROTATING HALF-ANGLE MIRROR, 3 rps
DWELL TIME	42.0 μs
IFOV	1.6 x 1.6 mr
TELESCOPE	OFF-AXIS AFOCAL GREGORIAN WITH REFRACTIVE FOCUSING OPTICS BEFORE FOCAL PLANE
SPECTRAL SEPARATION	DICHROIC BEAMSPLITTERS AND NARROW-BAND FILTERS.

SeaWiFS BASELINE INSTRUMENT PARAMETERS

HUGHES

SANTA BARBARA RESEARCH CENTER
a subsidiary

ON-ORBIT CALIBRATION	SOLAR DIFFUSER WITH ATTENUATOR LUNAR SCENE
DATA RATE	1.905 Mbit/SEC
SCANNER SIZE	20 x 21 x 20 IN. (NO SPECIFICATION)
WEIGHT	94 LB: (SPECIFICATION 99 LB MAX)
POWER	88W OPERATIONAL, 60W ORBIT AVERAGE
NUMBER OF SPECTRAL BANDS	8
NUMBER OF DETECTORS PER BAND	SELECTABLE FROM 4 TO 1 TDI
FOCAL PLANE ASSEMBLIES	4 (2 BANDS PER FPA) UNCOOLED SILICON PHOTODIODE ARRAYS

11/91
91-0838-8

SeaWiFS
SEA-VIEWING, WIDE FIELD-OF-VIEW SENSOR

HUGHES

SANTA BARBARA RESEARCH CENTER
a subsidiary

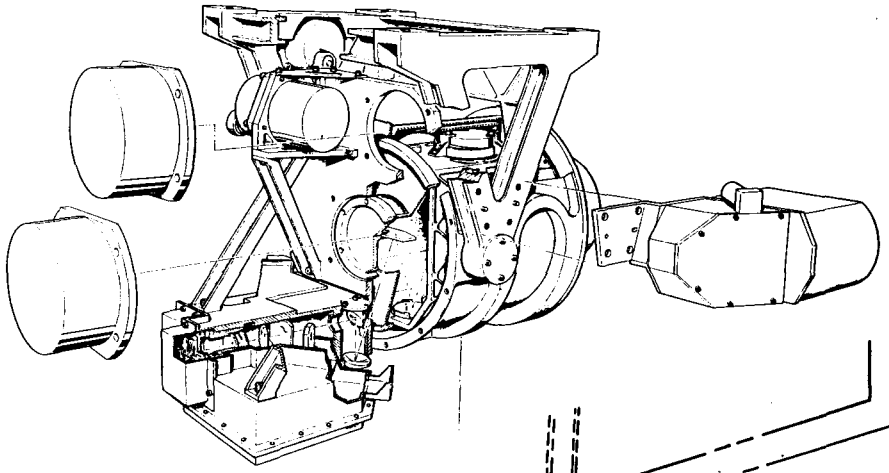

SCANNER ASSEMBLY

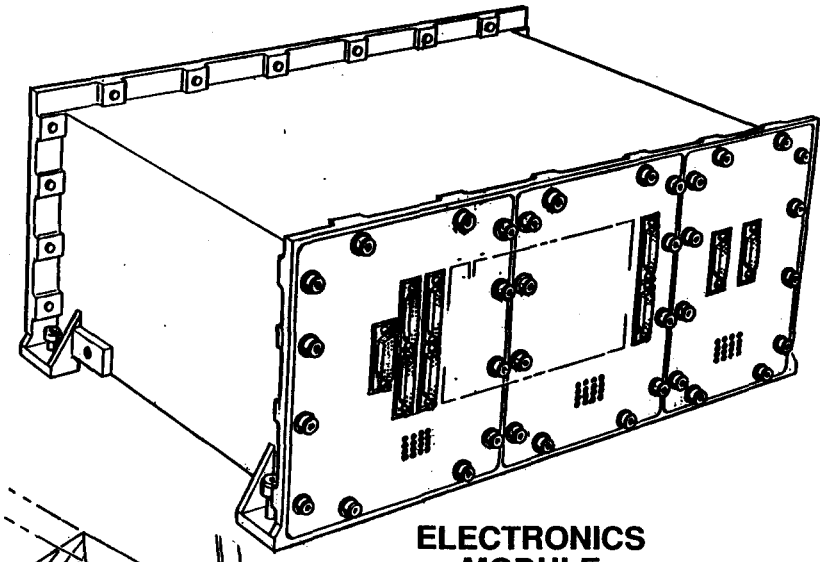

ELECTRONICS MODULE

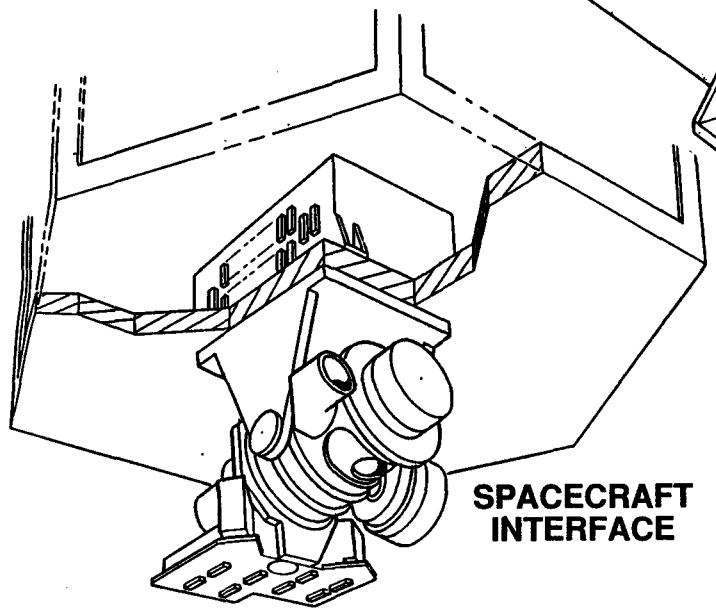

SPACECRAFT INTERFACE

11/91
91-0838-9

SCANNER ASSEMBLY

HUGHES

SANTA BARBARA RESEARCH CENTER
a subsidiary

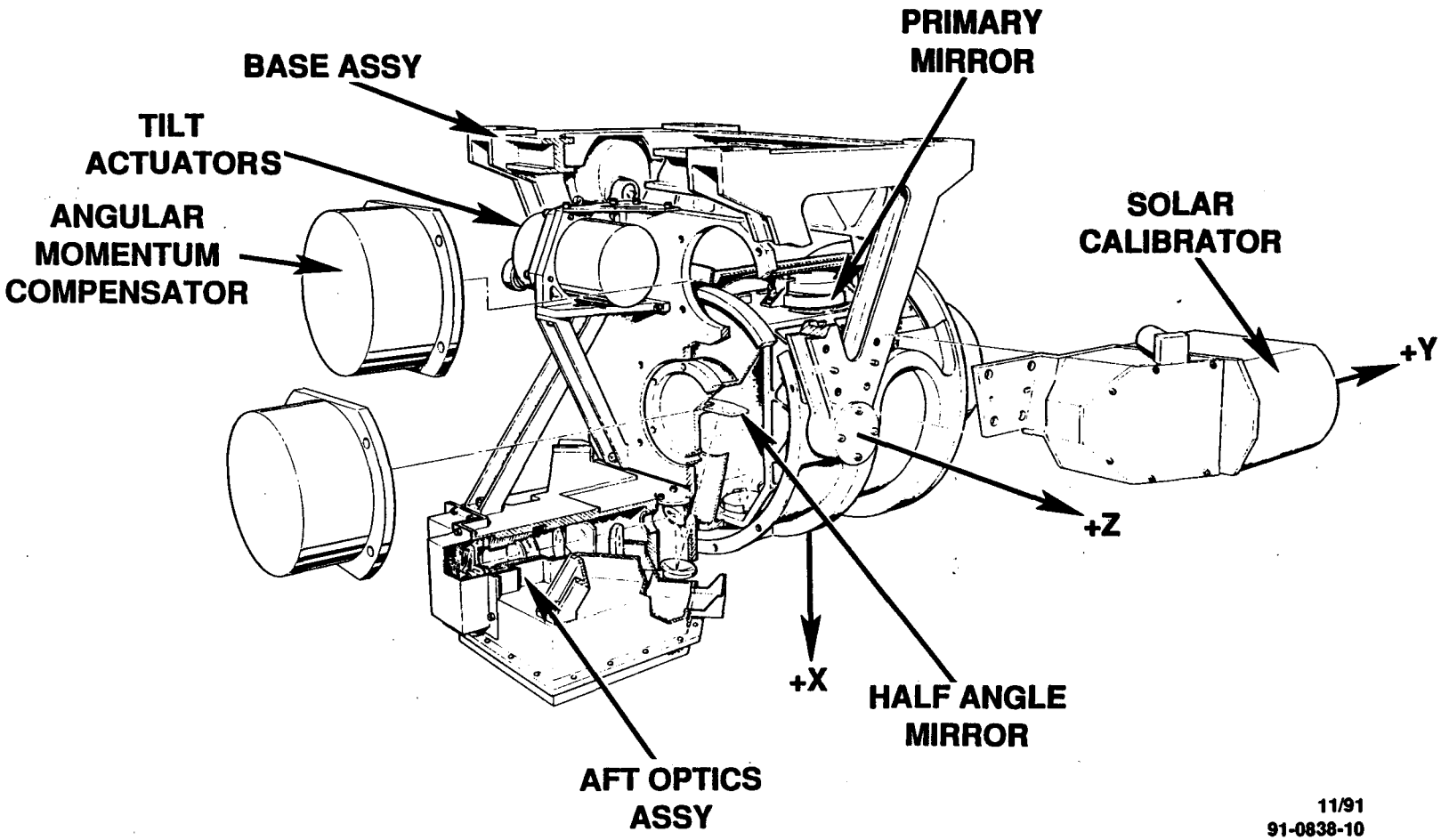

11/91
91-0838-10

SeaWiFS INSTRUMENT

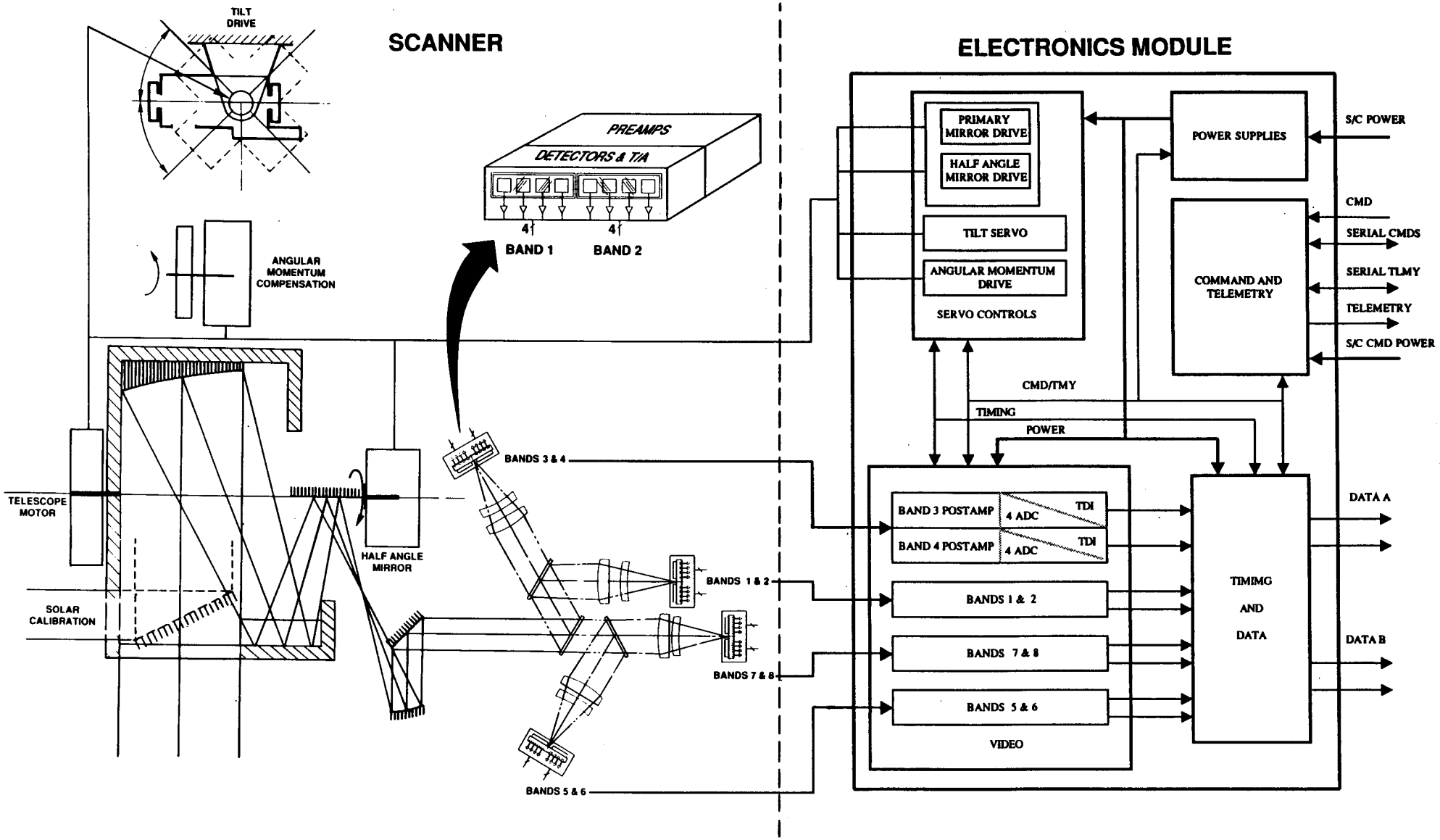

11/91
91-0838-11A

PROGRAM OBJECTIVES

HUGHES

SANTA BARBARA RESEARCH CENTER
a subsidiary

- DESIGN, BUILD, CALIBRATE, AND DELIVER THE SeaWiFS INSTRUMENT TO ORBITAL SCIENCES CORPORATION BY MAY 16, 1993

- SUPPLY ORBITAL SCIENCES CORPORATION WITH ENGINEERING DEVELOPMENT UNIT (EDU) TO SUPPORT SPACECRAFT INTEGRATION BY SEPTEMBER 16, 1992

SeaWiFS PROGRAM ORGANIZATION

HUGHES

SANTA BARBARA RESEARCH CENTER
a subsidiary

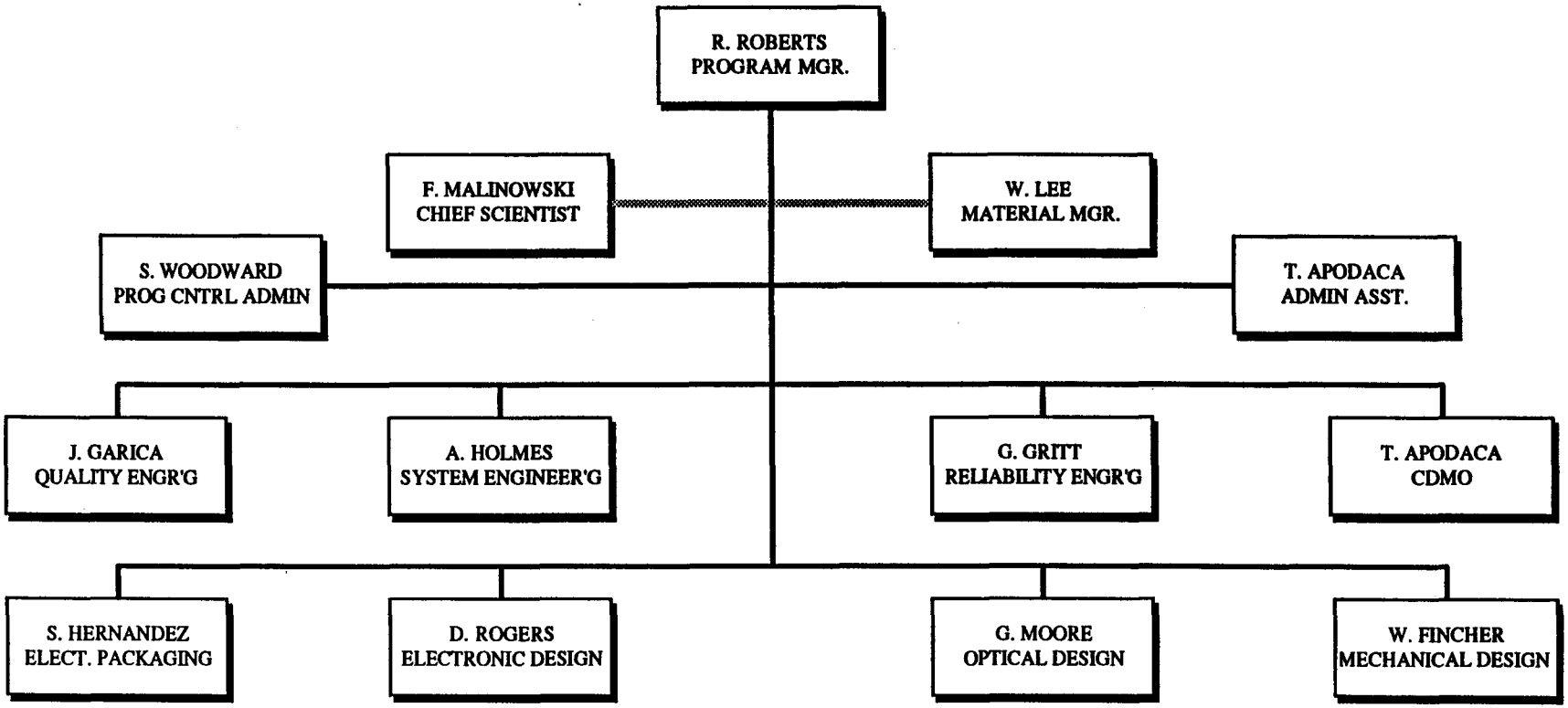

11/91
91-0838-12B

PROGRAM STATUS SUPPORTS MAY 93 DELIVERY

HUGHES

SANTA BARBARA RESEARCH CENTER
a subsidiary

- PROGRAM STARTED 16 MAY 1991
- PRELIMINARY DESIGN REVIEW JULY 16 & 17 1991
- DETAIL DESIGN NEARLY COMPLETE
- MAJOR PROCUREMENTS BEING PLACED
  - MOTORS
  - FILTERS AND DICHROICS
  - MIRRORS
  - PRINTED WIRING BOARDS
  - POWER SUPPLY
  - DETECTORS
  - ELECTRONICS MODULE HOUSING

SeaWiFS Instrument Program Schedule

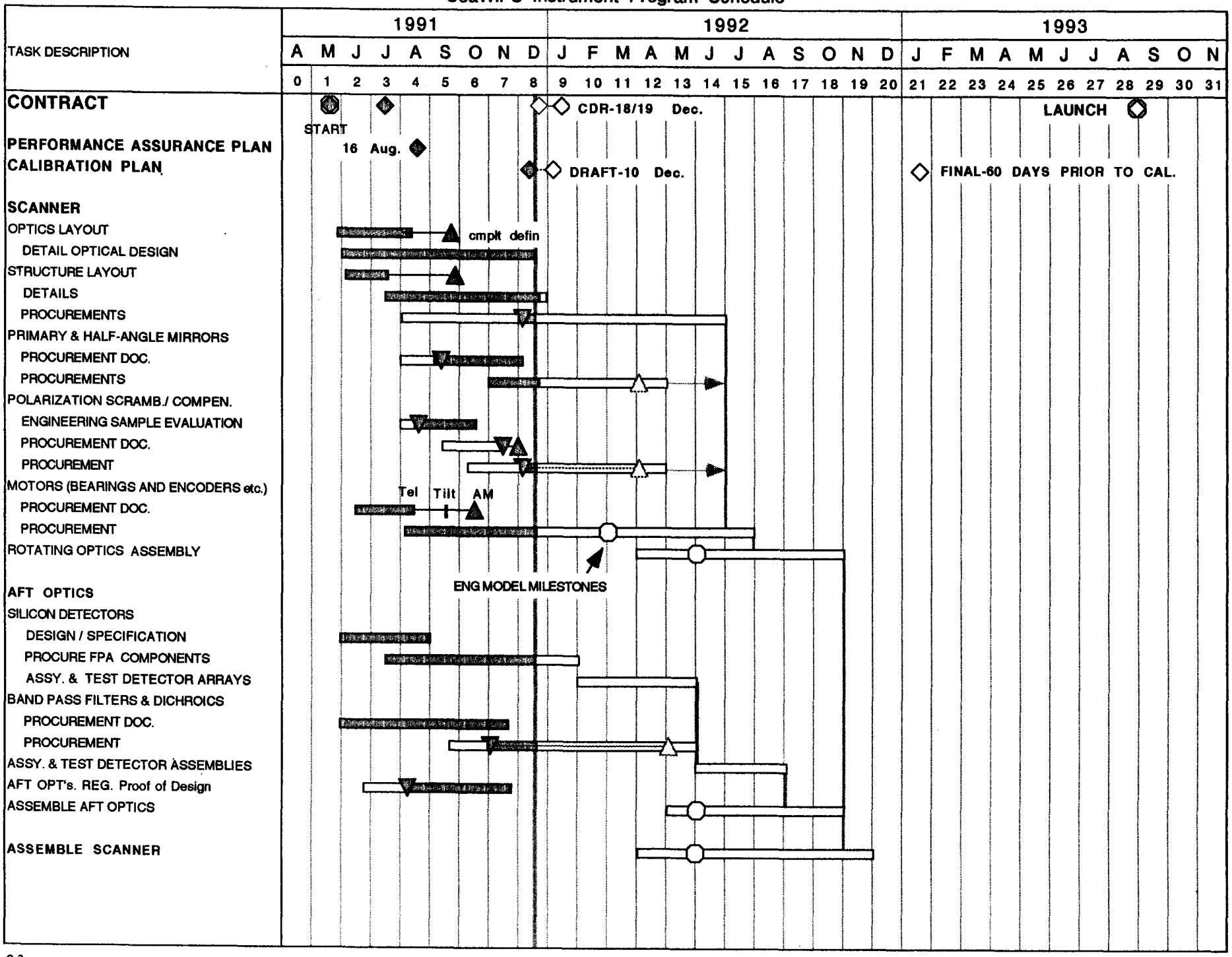

Wednesday, December 18, 1991

11/91

91-0838-14

SeaWiFS Instrument Program Schedule

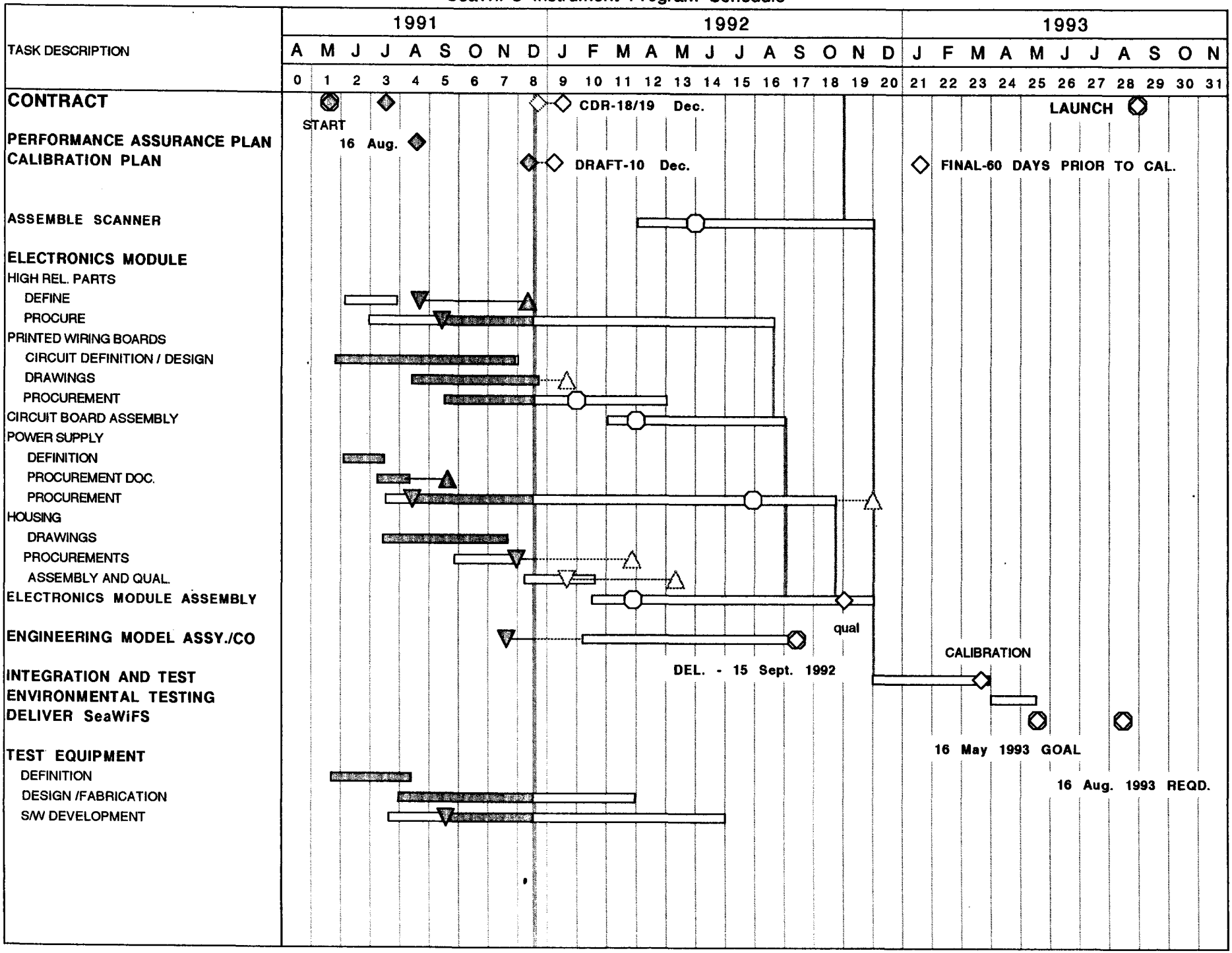

Wednesday, December 18, 1991
11/91
91-0838-15

SeaWiFS Deliveries

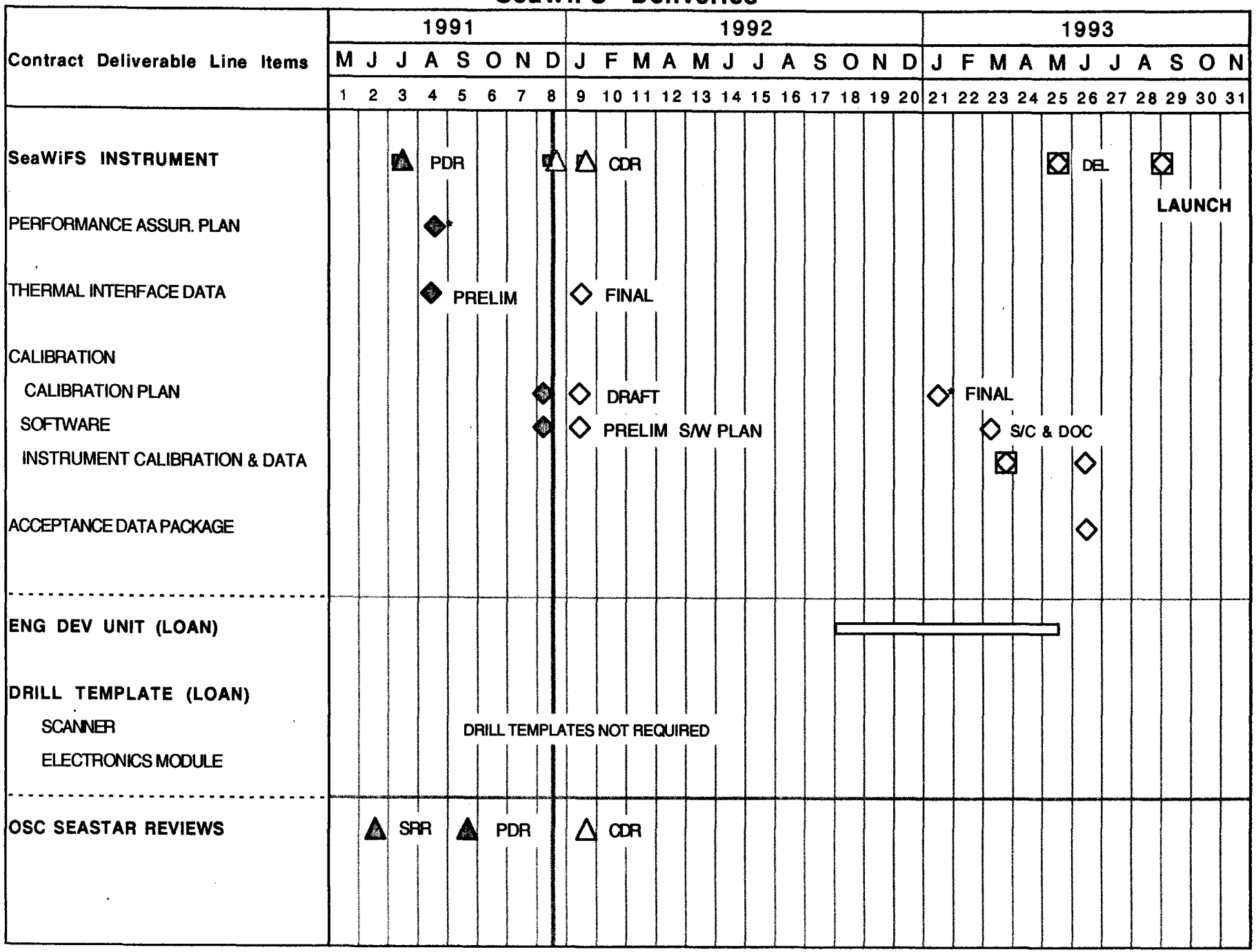

* REQUIRES GSFC APPROVAL

Wednesday, December 18, 1991

11/91
91-0838-16

RISK REDUCTION RECEIVES SIGNIFICANT ATTENTION

HUGHES

SANTA BARBARA RESEARCH CENTER
a subsidiary

- **BRIGHT TARGET RECOVERY**
  - EARLY EVALUATION OF DETECTORS AND TIA CIRCUITS
  - BREADBOARD TESTING OF FLIGHT CIRCUITS AND DETECTOR CONFIGURATIONS
- **SCANNER SERVO SYSTEM**
  - EVALUATION OF ACTUAL WINDAGE CREATED BY ROTATING COMPONENTS
  - BREADBOARD TESTING OF TELESCOPE AND HALF ANGLE MIRROR SERVO
- **TILT MECHANISM**
  - PLANNED BREADBOARD OF MECHANISM AND SERVO CONTROLS
- **ELECTRONICS DESIGN**
  - ASSEMBLY OF "ENGINEERING MODEL" ELECTRONICS IN <u>ADDITION</u> TO EDU.
- **POLARIZATION SCRAMBLER**
  - BREADBOARD TESTING OF SAMPLE SCRAMBLER
- **BANDPASS FILTERS**
  - SAMPLES FROM TWO SUPPLIERS EVALUATED FOR ASSEMBLY TECHNIQUES

REQUIREMENTS AND INSTRUMENT DESIGN OVERVIEW

ALAN HOLMES

11/91
91-0838-50

INSTRUMENT OPTICAL REQUIREMENTS OF OVERVIEW

HUGHES

SANTA BARBARA RESEARCH CENTER
a subsidiary

- 8 SPECTRAL BANDS
- PIXEL SIZE OF 1.6 x 1.6 mR
- ±58.3 DEGREE FIELD OF VIEW 6 TIMES A SECOND
- 10-BIT DATA WORDS WITH SNR OF 447 TO 667
- POINTING KNOWLEDGE ACCURACY OF 0.23 mR IN-TRACK, AND 0.23 mR CROSS TRACK AT ALL SCAN POSITIONS AND ORIENTATIONS (1σ)
- <2% POLARIZATION OVER THE CENTER ±45° OF THE SCAN
- ±20 DEGREES FORE/AFT POINTING
- BAND TO BAND REGISTRATION 0.48 mR (1σ)

MECHANICAL REQUIREMENTS OVERVIEW

HUGHES

SANTA BARBARA RESEARCH CENTER
a subsidiary

- 5-YEAR LIFE; CONTINUOUSLY OPERATING MOTORS
- TOTAL WEIGHT LESS THAN 99 LBS
- UNCOMPENSATED ANGULAR MOMENTUM LESS THAN 1 IN.-OZ-SEC
- DYNAMICALLY BALANCED TO WITHIN ±0.5 IN.-OZ
- AT LEAST 4X TORQUE MARGIN ON ALL MOTORS BEGINNING OF LIFE
- TILT MECHANISM REQUIRED TO SELECT +20, 0 AND -20° LOOK ANGLES IN LESS THAN 13 SEC
- ALIGNMENT MIRRORS REQUIRED; SCANNER X AND Y AXIS MUST BE KNOWN TO WITHIN 0.2 mR RMS
- TELESCOPE CAN BE DRIVEN TO A STOW POSITION

ELECTRICAL REQUIREMENTS OVERVIEW

HUGHES

SANTA BARBARA RESEARCH CENTER
a subsidiary

- DIGITAL VIDEO OUTPUT: EIGHT 10-BIT WORDS PER PIXEL, 1285 PIXELS PER FRAME
- TDI (TIME DELAY INTEGRATION) REQUIRED
- DETECTOR SAMPLING MUST BE CONTROLLED WITH 0.01% POSITION ACCURACY
- ACCEPT SPACECRAFT COMMAND SIGNALS AND PRODUCE TELEMETRY OUTPUTS
- CONTAIN INTERNAL POWER SUPPLY TO PRODUCE OPERATING VOLTAGES FROM UNREGULATED BUS
- MAXIMUM STEADY-STATE POWER (FROM SPACECRAFT BUS) LESS THAN 110W
- ORBIT AVERAGE POWER LESS THAN 68W
- 5-YEAR LIFE REQUIRED; CONSIDERABLE REDUNDANCY IMPLEMENTED

INTERFACE REQUIREMENTS OVERVIEW

HUGHES

SANTA BARBARA RESEARCH CENTER
a subsidiary

- MECHANICAL
  - SCANNER SIZE: LESS THAN 20 IN. ON A SIDE
  - CLEAR FIELDS OF VIEW REQUIRED FOR BOTH SCANNER AND EM
  - SCANNER TILT CLEARANCE REQUIRED
  - TWO ALIGNMENT MIRRORS REQUIRED
  - ACCESS REQUIRED (CONNECTORS, PURGE PORT, REFERENCE ALIGNMENT MIRRORS)
  - CENTER OF MASS AND MOMENT OF INERTIA MUST BE DETERMINED

- THERMAL
  - THERMALLY ISOLATED FROM SPACECRAFT
  - INSTRUMENT CONTAINS TEMPERATURE CONTROL (HEATERS, RADIATION TO SPACE)
  - OPERATING RANGE: SCANNER 0 TO 35°C; EM, 0 TO 45°C
  - NONOPERATING RANGE: SCANNER, -30 TO +50°C; EM, -30 TO +50°C
  - THERMAL INTERFACE DATA REQUIRED

INTERFACE REQUIREMENTS OVERVIEW (CONTINUED)

HUGHES

SANTA BARBARA RESEARCH CENTER
a subsidiary

- OPTICAL
  - CORRECT SCANNER ORIENTATION
  - CLEAR FIELDS OF VIEW
- ELECTRICAL
  - SPACECRAFT POWER REQUIREMENTS:
    - 28 ± 4.0V, 0 TO 1.5A HEATERS AND STOW
    - 28 ± 4.0V, 4.0A (28V) PRIMARY
  - NOT DAMAGED BY 0 TO 40 (TBR) V POWER RANGE
  - TRANSIENT SUPPRESSION REQUIRED
  - SINGLE-POINT GROUND
  - SPECIFIED SIGNAL CHARACTERISTICS
    - COMMAND
    - TELEMETRY
    - VIDEO DATA
    - RELAYS

SCANNER ASSEMBLY

HUGHES

SANTA BARBARA RESEARCH CENTER
a subsidiary

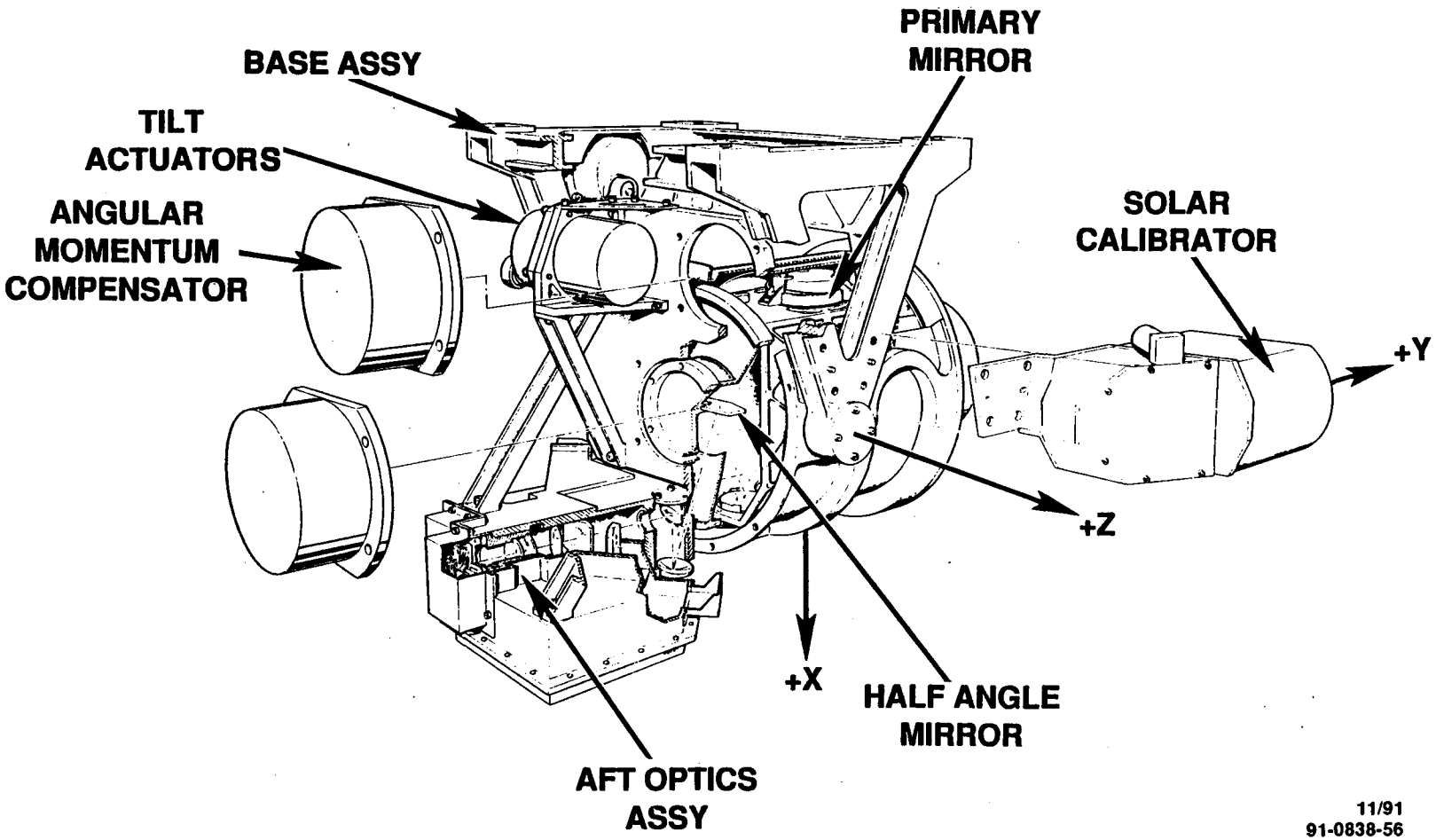

11/91
91-0838-56

COORDINATE SYSTEM

HUGHES

SANTA BARBARA RESEARCH CENTER
a subsidiary

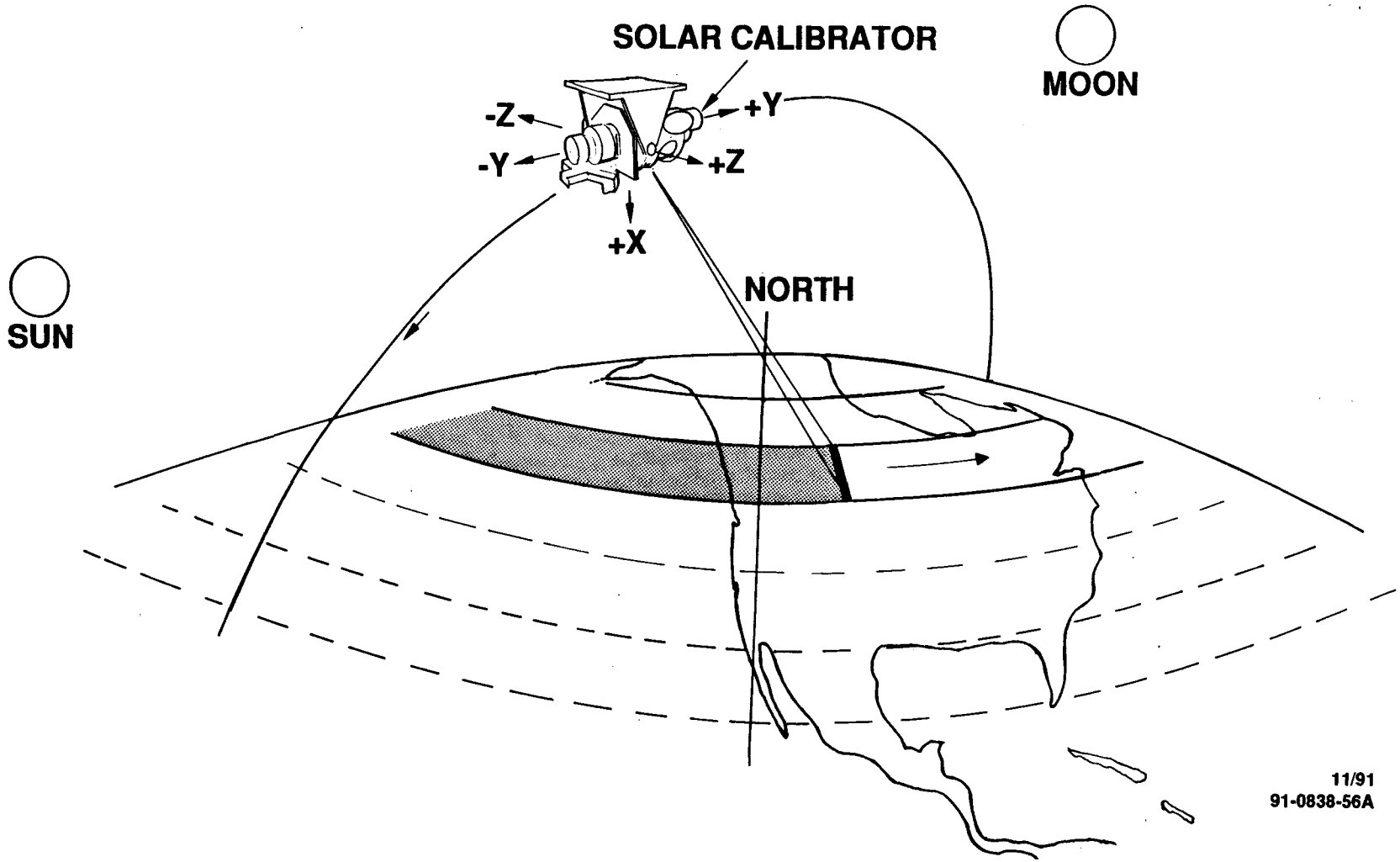

11/91
91-0838-56A

SeaWiFS OPTICAL LAYOUT

HUGHES

SANTA BARBARA RESEARCH CENTER
a subsidiary

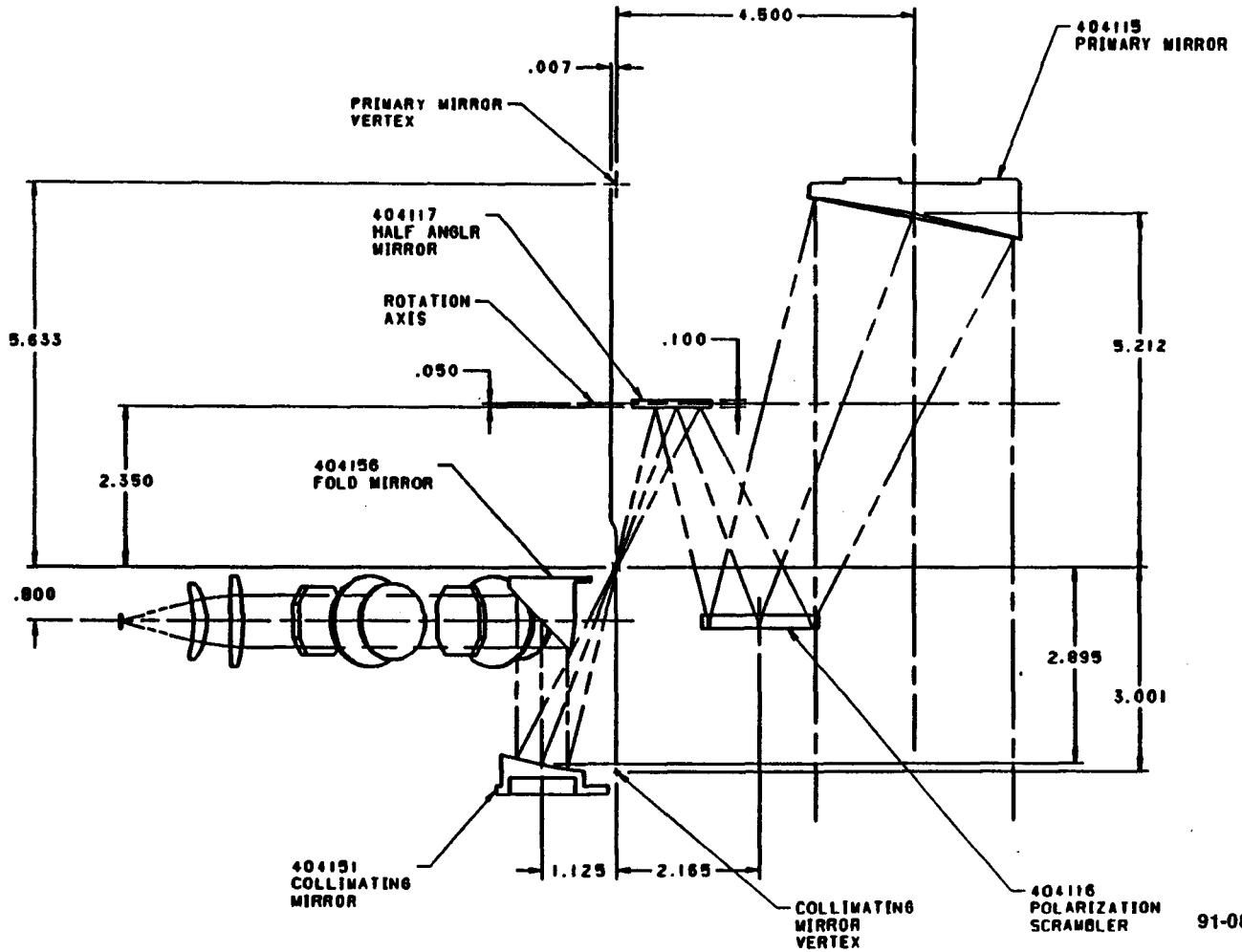

11/91
91-0838-57

ROTATING TELESCOPE ASSEMBLY DESIGN MINIMIZES MASS AND INERTIA

HUGHES

SANTA BARBARA RESEARCH CENTER
a subsidiary

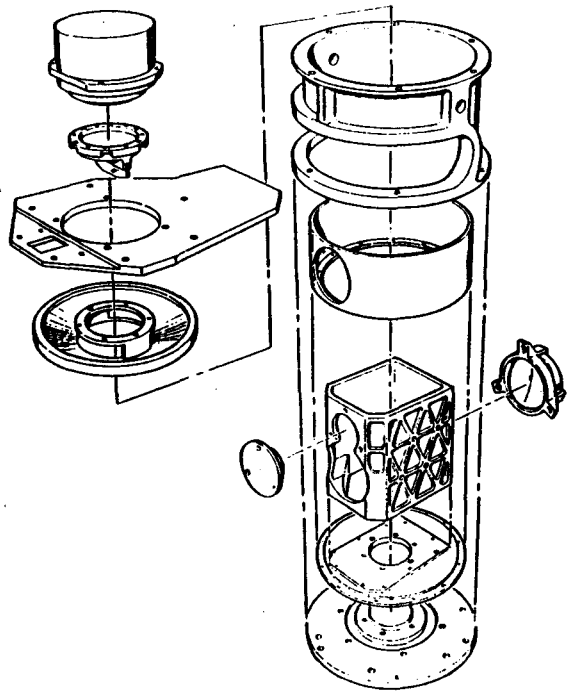

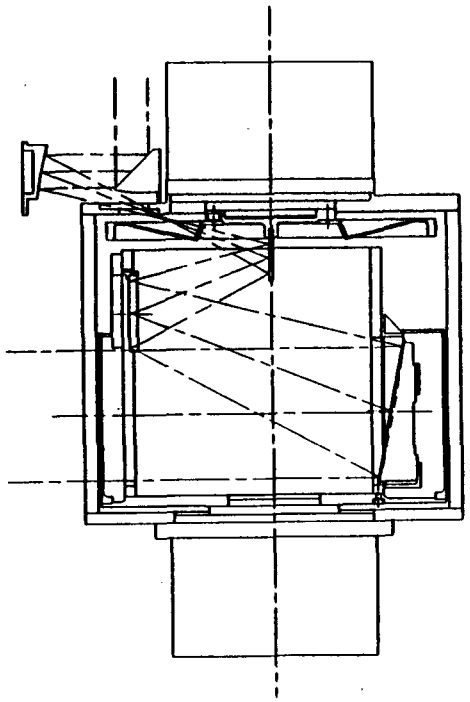

CALCULATED WEIGHT AND INERTIA:

TELESCOPE	2.7 LB, 1.3 OZ-IN.-s^2
HALF ANGLE MIRROR	0.5 LB, 0.2 OZ-IN.-s^2

11/91
91-0838-58

AFT OPTICS ASSEMBLY

HUGHES

SANTA BARBARA RESEARCH CENTER
a subsidiary

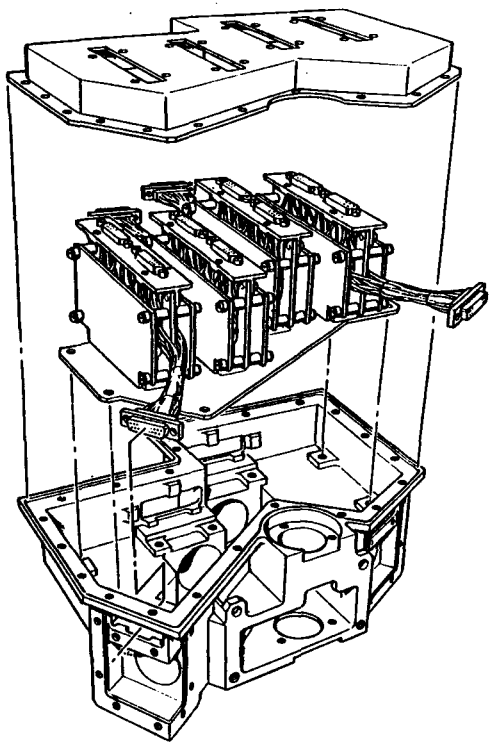

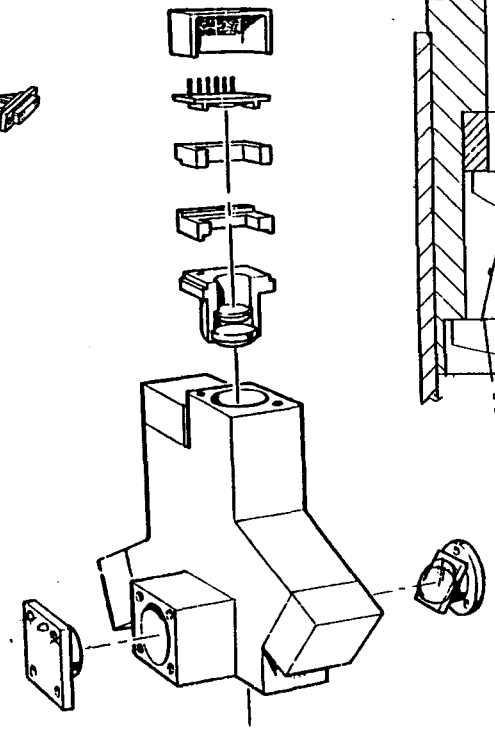

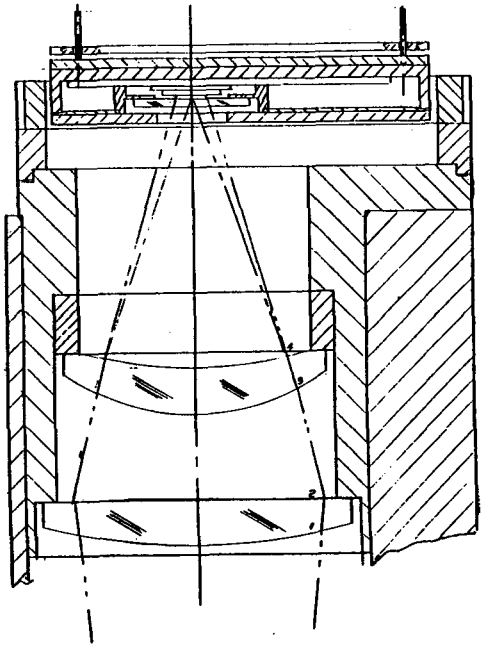

11/91
91-0838-59

TILT MECHANISM CONFIGURATION PRODUCES MAXIMUM STIFFNESS IN THREE POSITIONS

HUGHES

SANTA BARBARA RESEARCH CENTER
a subsidiary

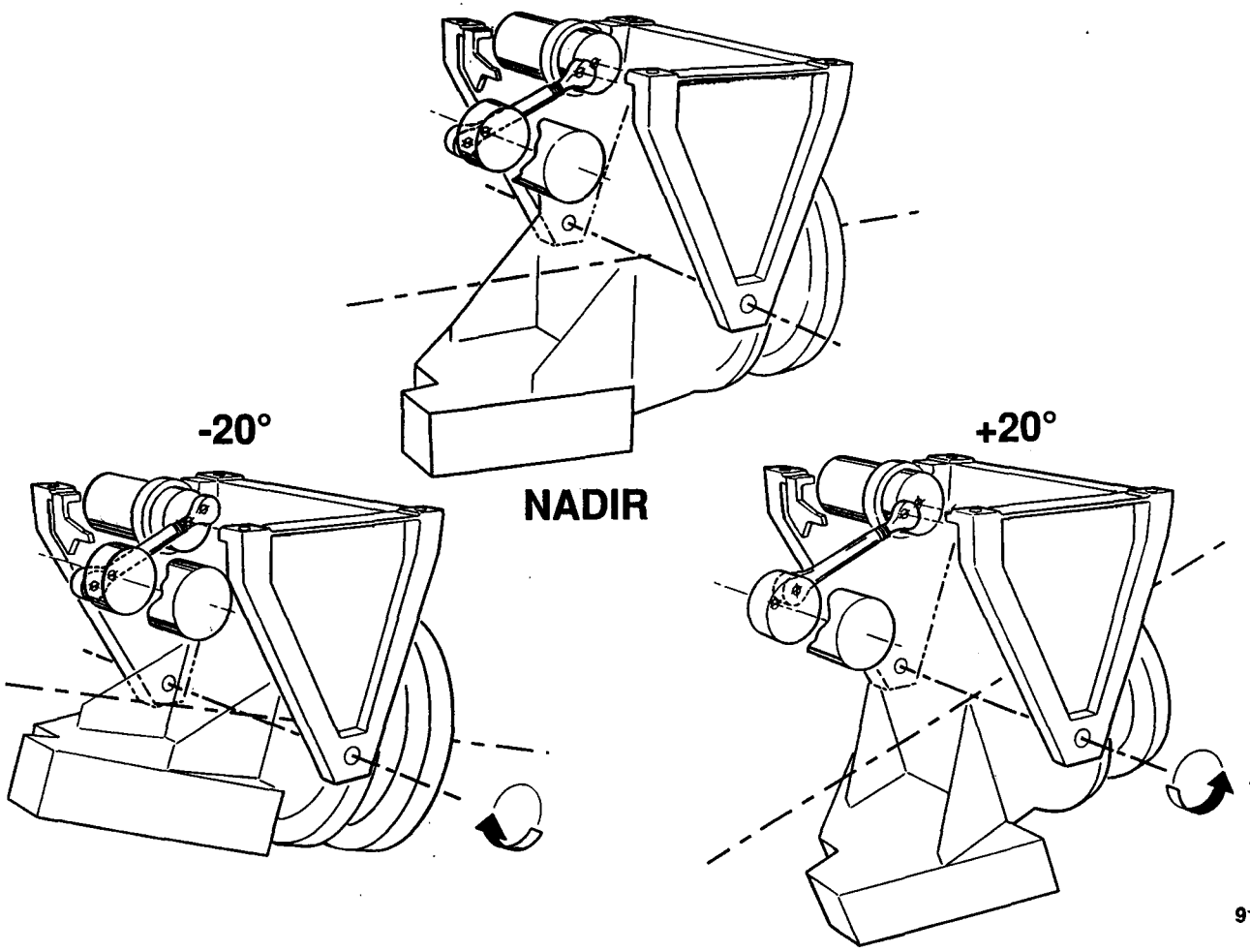

11/91
91-0838-60A

SOLAR CALIBRATOR ASSEMBLY USES A DOOR TO PROTECT DIFFUSER DURING ORBIT INSERTION

HUGHES

SANTA BARBARA RESEARCH CENTER
a subsidiary

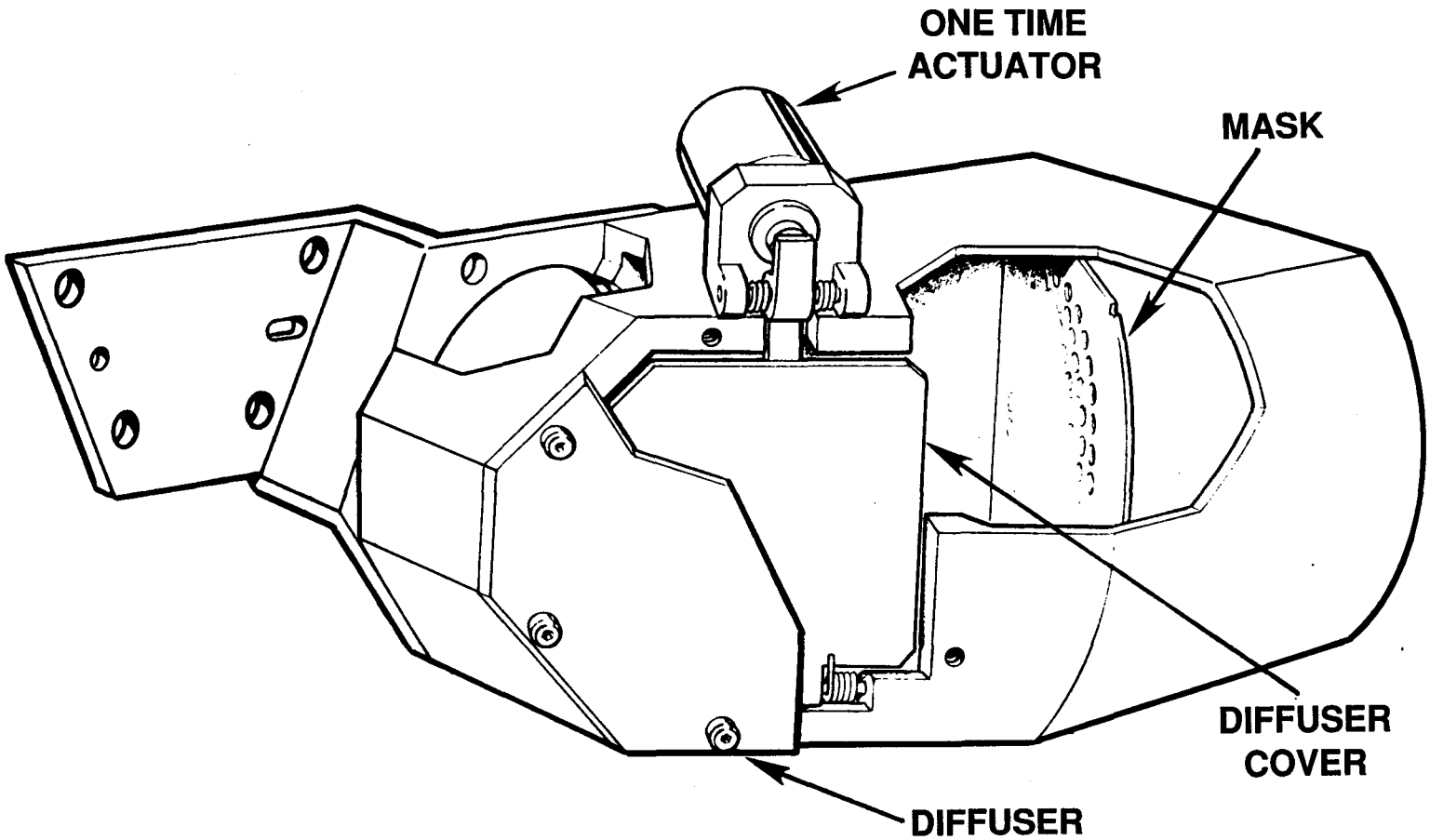

11/91
91-0838-61

2:1

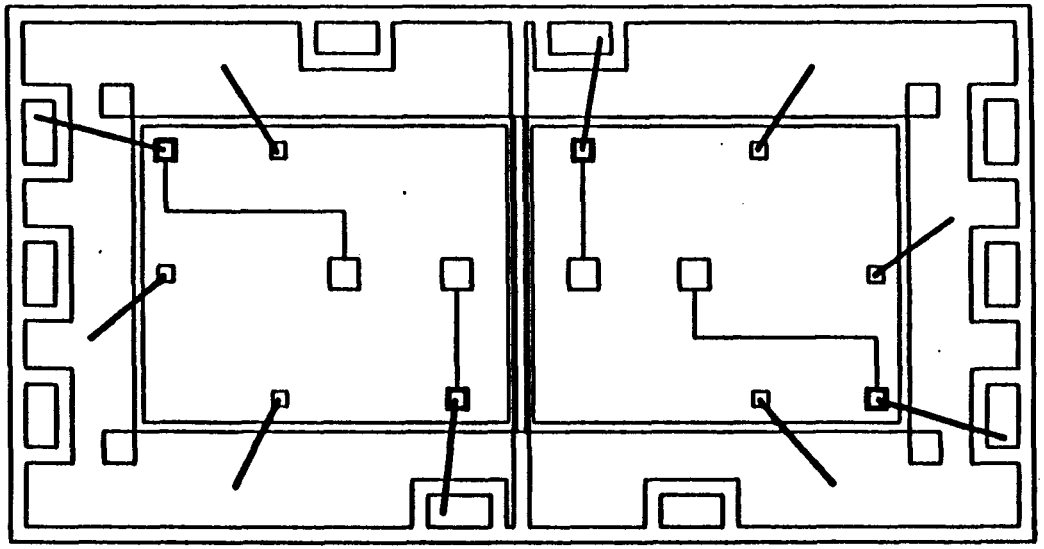

4:1

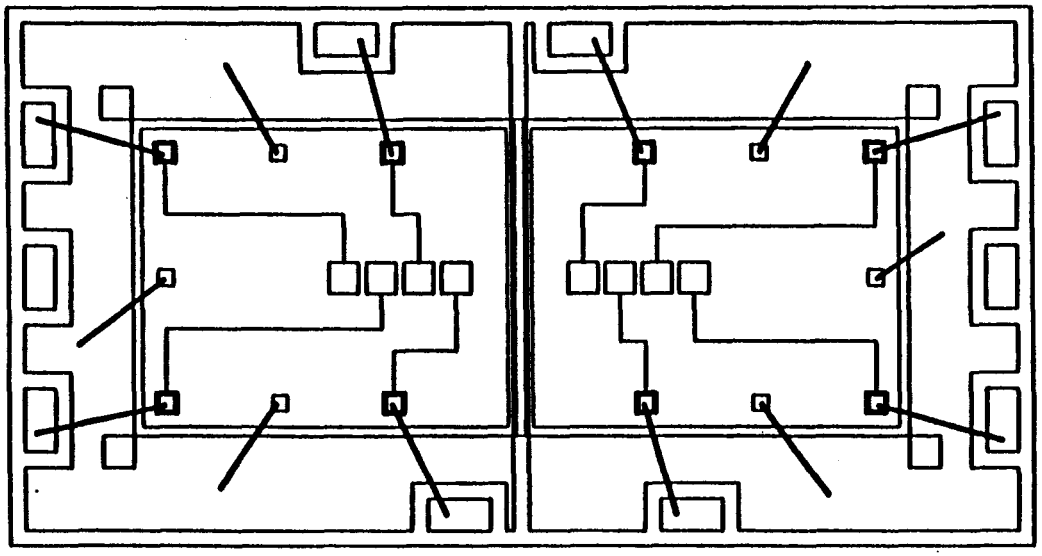

HUGHES

SANTA BARBARA RESEARCH CENTER
a subsidiary

SILICON DETECTORS ARE BEING FABRICATED TO IMPLEMENT 4:1 AND 2:1 TDI

SeaWiFS™

11/91
91-0838-62

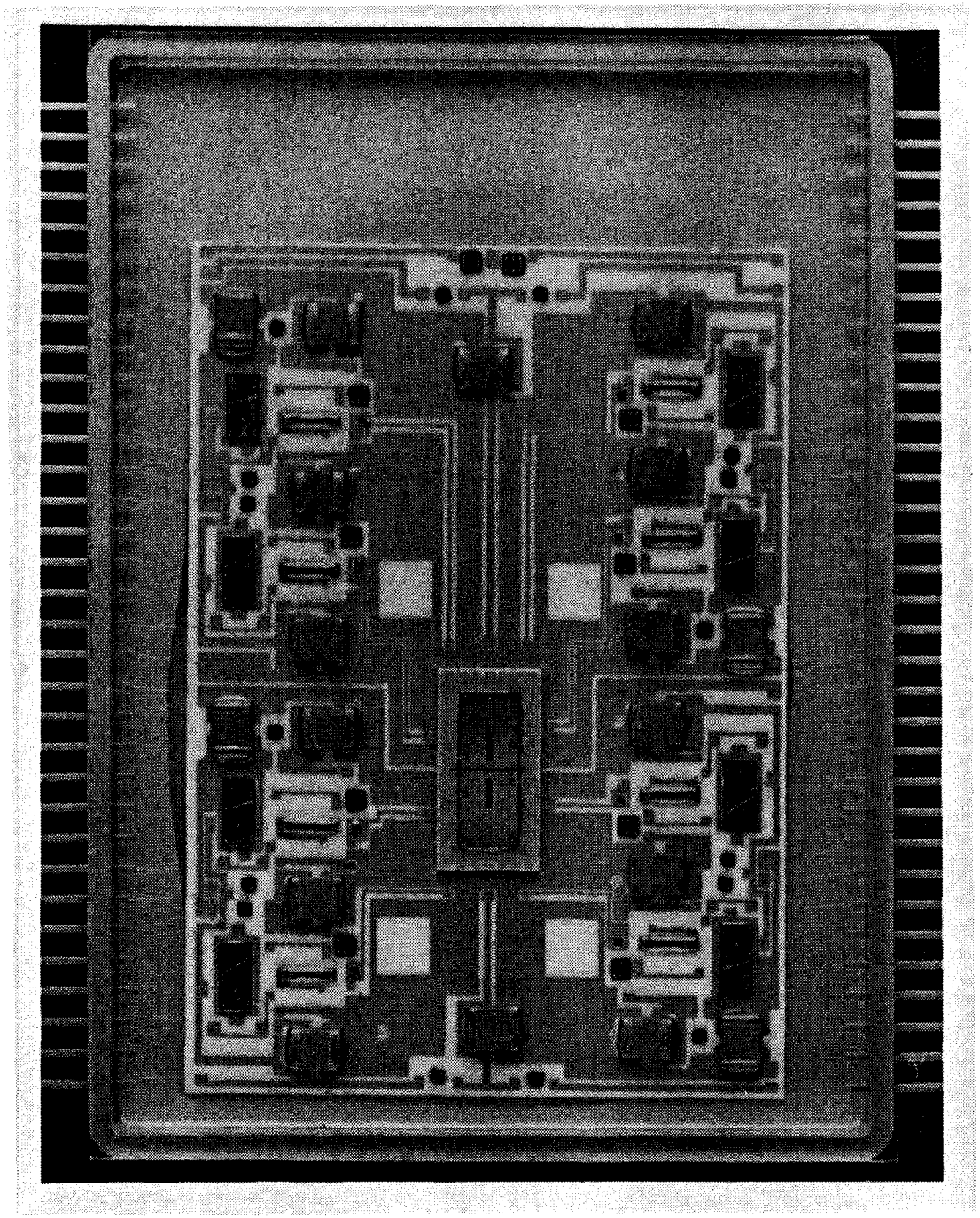

HUGHES

SANTA BARBARA RESEARCH CENTER
a subsidiary

FOCAL PLANE ASSEMBLY

SeaWiFS™

11/91
91-0838-63

Scanner Aperture & Pointing Angles

Solid Lines: Aperture Limits (Earth, Solar & Telescope)
Dotted Lines: Telescope Pointing Angles

10/30/91

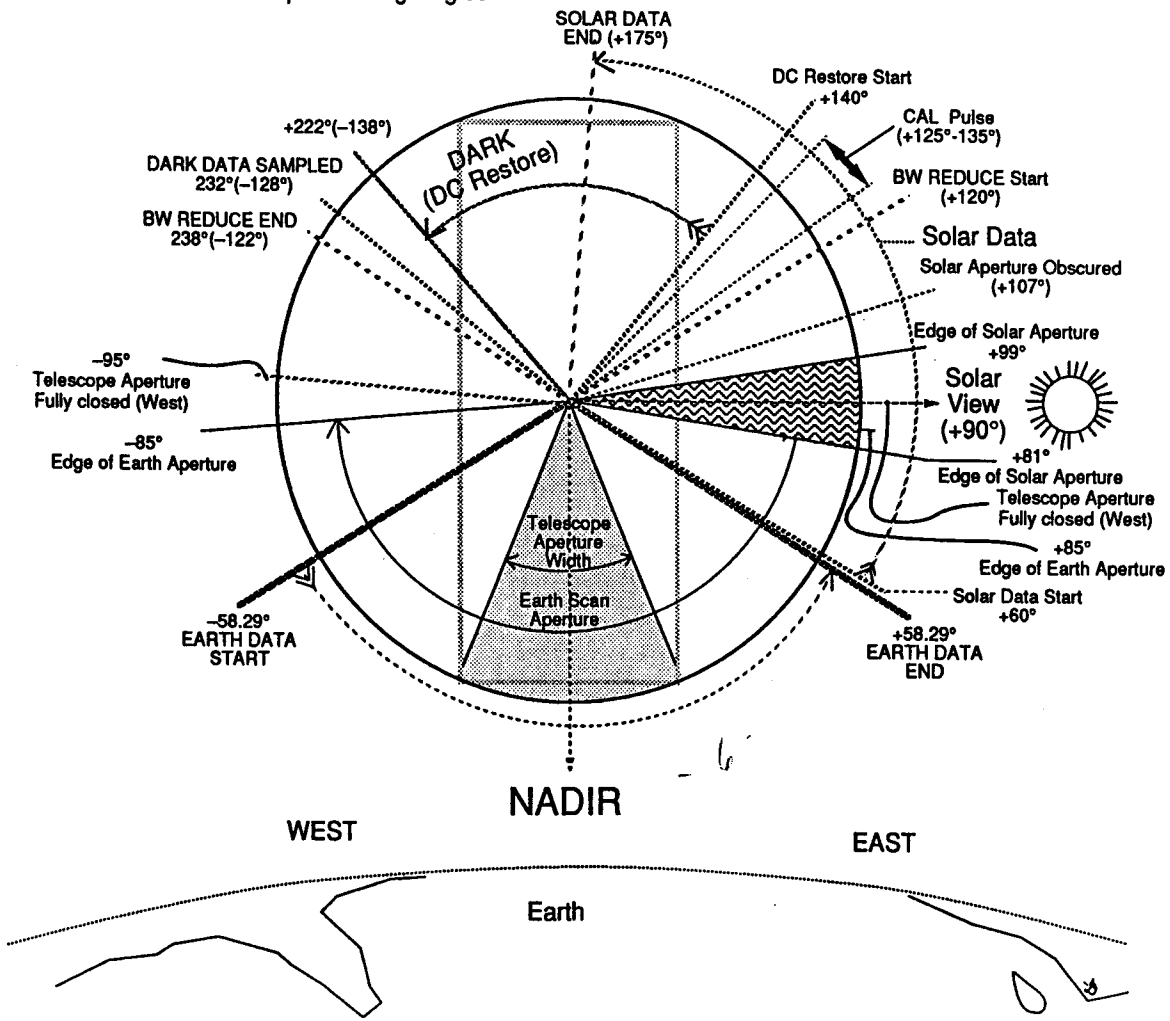

HUGHES

SANTA BARBARA RESEARCH CENTER
a subsidiary

SCANNER APERTURE AND POINTING ANGLES

SeaWiFS™

11/91
91-0838-65

Se..ViF.. Sy..em. _lec..on..s Ii..rc..ne.. Di_gra...

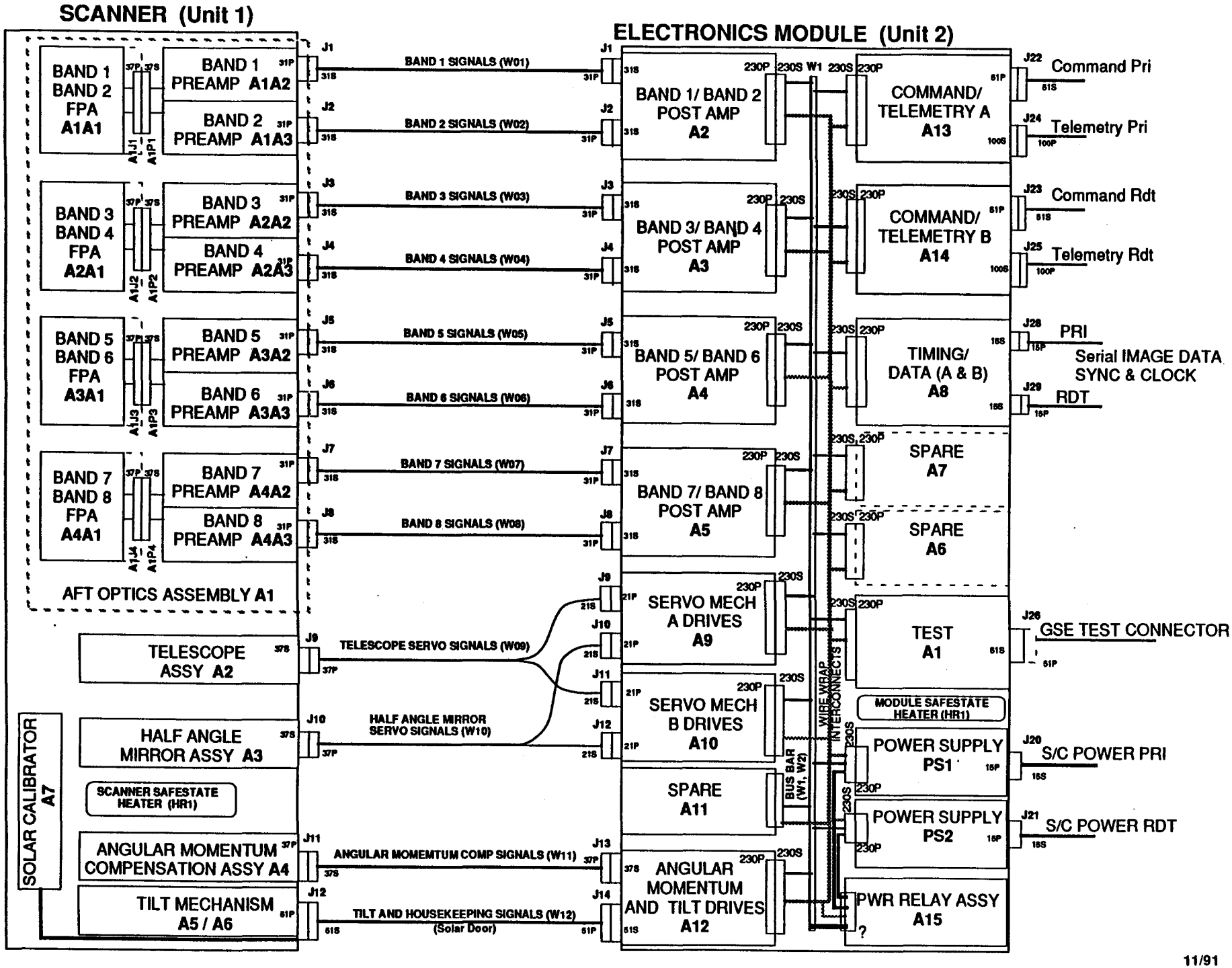

11/91
91-0838-66

ELECTRONICS MODULE DESIGN ALLOWS EASY ACCESS TO ALL AREAS

HUGHES

SANTA BARBARA RESEARCH CENTER
a subsidiary

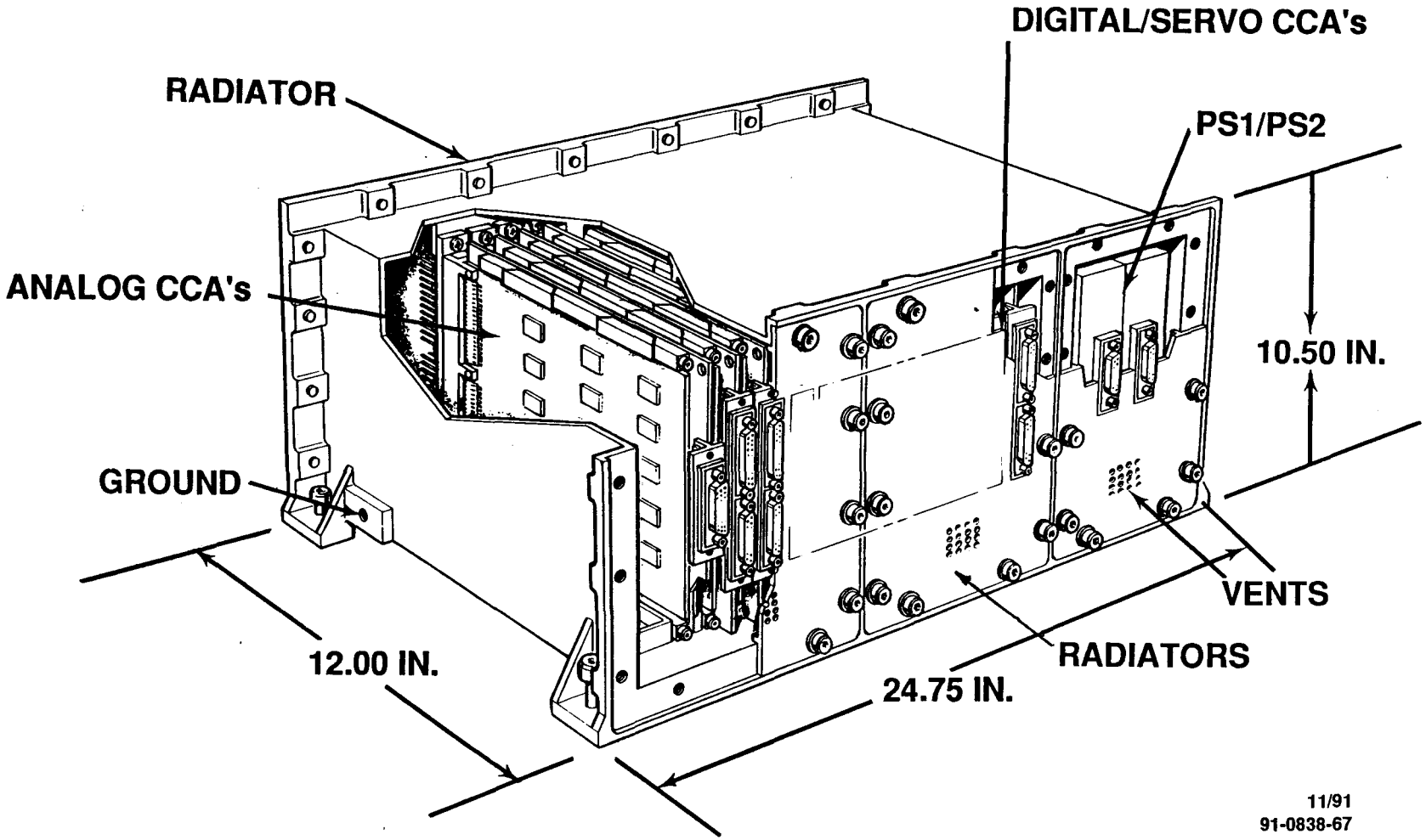

11/91
91-0838-67

CIRCUIT CARD ASSEMBLY CONDUCTS HEAT TO EM WALL

HUGHES

SANTA BARBARA RESEARCH CENTER
a subsidiary

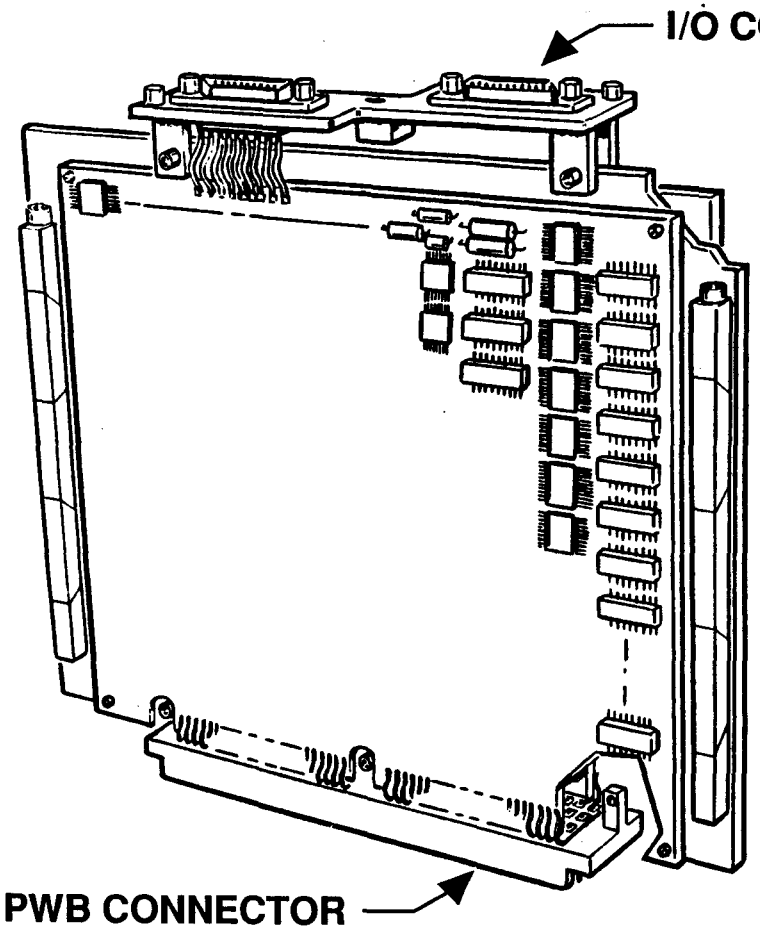

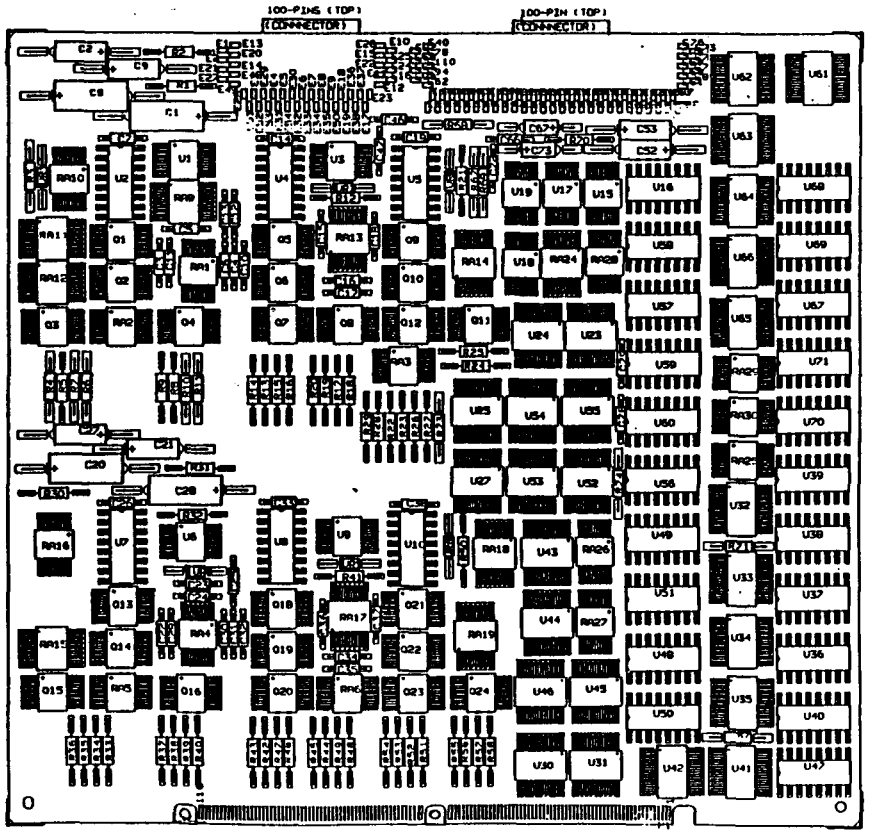

11/91
91-0838-68

CURRENT WEIGHT ESTIMATE CONTAINS SOME MARGIN, BUT WILL REQUIRE CAREFUL MONITORING

HUGHES

SANTA BARBARA RESEARCH CENTER
a subsidiary

SCANNER WEIGHT ESTIMATE	44.6 LBS
ELECTRONICS MODULE	44.0
CABLES	5.6
TOTAL ESTIMATED WEIGHT (30 OCT 1991)	94.2 LBS
NOT-TO-EXCEED WEIGHT	99 LBS
MARGIN	4.8 LBS

11/91
91-0838-69

CURRENT POWER ESTIMATE IS BASED ON MOTORS RUNNING CONTINUOUSLY

HUGHES

SANTA BARBARA RESEARCH CENTER
a subsidiary

POWER DRAWN FROM SPACECRAFT BUS		
OPERATING MODE	NOMINAL	WORST CASE
IMAGING	58	110
IMAGING AND TILT	68	124
ECLIPSE	36	40
SAFE STATE	15	15
ORBIT AVERAGE, 40% IMAGING AND 60% ECLIPSE	41.2W	68W

ASSUMPTIONS:

- 65% EFFICIENT POWER SUPPLY
- NOMINAL BEARING DRAG 4 IN.-OZ; WORST CASE 8 IN.-OZ
- WORST CASE NUMBERS USE MANUFACTURER'S WORST CASE POWER

INSTRUMENT EMPLOYS REDUNDANCY FOR MANY SUBSYSTEMS TO REDUCE PROBABILITY OF SINGLE POINT FAILURES

HUGHES

SANTA BARBARA RESEARCH CENTER
a subsidiary

- REDUNDANT SUBSYSTEMS WHICH ARE CROSS-STRAPPABLE
  - POWER SUPPLY A/B
  - COMMAND/TELEMETRY A/B
  - SCAN MECHANISM CONTROL A/B
  - TILT MECHANISM CONTROL A/B (PARTIALLY REDUNDANT)
  - TIMING DATA A/B
- FEATURES ADDED TO PRODUCE A "GRACEFUL" FAILURE MODE
  - DETECTOR TDI FLEXIBILITY; ANY N DETECTORS CAN BE SUMMED
  - WITHIN A BAND, EVEN AND ODD DETECTORS HAVE:
    - SEPARATE BIAS LINES
    - SEPARATE OP-AMP POWER SUPPLIES
    - SEPARATE PREAMPS AND POSTAMPS
  - MULTIPLE TECHNIQUES TO DISABLE STOW
  - TILT MECHANISM MOTORS ACT IN SERIES

SYSTEMS ANALYSIS

ALAN HOLMES

11/91
91-0838-100

MAJOR SYSTEMS ENGINEERING ISSUES

HUGHES

SANTA BARBARA RESEARCH CENTER
a subsidiary

- SYSTEM TIMING
- SIGNAL ESTIMATES
- SIGNAL TO NOISE RATIOS
- BRIGHT TARGET RECOVERY
- POINTING BUDGET
- IMAGE QUALITY (MTF)
- SOLAR CALIBRATOR

EXACT QUANTITIES

HUGHES

SANTA BARBARA RESEARCH CENTER
a subsidiary

- **DEFINED QUANTITIES**

TELESCOPE SCAN RPM	=	360
PIXELS PER REVOLUTION	=	3968
ENCODER PIPS PER REVOLUTION	=	2048

- **DERIVED QUANTITIES**

PIXEL ANGULAR SIZE	=	1.5835 mR (ALONG SCAN) BY 1.597 mR (ALONG TRACK)
PIXEL DWELL TIME	=	42.0027 μs
SCAN SIZE (PIXELS)	=	1285 (10280 10-BIT WORDS)
SCAN SIZE (DEGREES)	=	±58.291 DEGREES
CENTER PIXEL NUMBER	=	643
TELESCOPE ENCODER FREQUENCY	=	12288 Hz
DATA BIT RATE	=	1904640 Hz

SIGNAL ESTIMATE ASSUMES SPECIFIED TRANSMITTANCE AND RESPONSIVITIES (11/5/91)

HUGHES

SANTA BARBARA RESEARCH CENTER
a subsidiary

SEAWIFS RADIOMETRY	BAND 1	BAND 2	BAND 3	BAND 4 *	BAND 5 *	BAND 6 *	BAND 7 *	BAND 8
CENTER WAVELENGTH IN nM	412	443	490	510	555	670	765	865
MAX SCENE RADIANCE (mW /CM^2/MICRON/STER)	13.63	13.25	10.5	8.75	7.25	4.25	3	2.13
SPECTRAL BANDWIDTH, µm	0.02	0.02	0.02	0.02	0.02	0.02	0.035	0.04
COLLECTION APERTURE (CM^2)	43.324	43.324	43.324	43.324	43.324	43.324	43.324	43.324
STERADIANS CAPTURED	2.53E-06	2.53E-06	2.53E-06	2.53E-06	2.53E-06	2.53E-06	2.53E-06	2.53E-06
OPTICAL THROUGHPUT	0.381	0.402	0.487	0.487	0.46	0.431	0.402	0.402
RESPONSIVITY, mA/mW	0.2	0.233	0.278	0.298	0.334	0.428	0.498	0.517
nA/mA	1.00E+06	1.00E+06	1.00E+06	1.00E+06	1.00E+06	1.00E+06	1.00E+06	1.00E+06
MAX SCENE SIGNAL (nA)	2.28	2.72	3.12	2.78	2.44	1.72	2.30	1.94
TYPICAL/MAX RATIO	0.6676	0.6347	0.6248	0.6217	0.6138	0.6118	0.5367	0.5117
TYPICAL SCENE SIGNAL (nA)	1.51940842	1.72613088	1.94630747	1.72998173	1.49822335	1.05105832	1.23610017	0.99277078

*** BAND DEFINITION HAS CHANGED, BUT NOT MAX SCENE RADIANCE**

11/91
91-0838-102A

CURRENT GAIN SETTINGS PROVIDE FOR ADDITIONAL GAIN CHOICES

HUGHES

SANTA BARBARA RESEARCH CENTER
a subsidiary

AVAILABLE GAINS				
BAND	GAIN 1	GAIN 2	GAIN 3	GAIN 4
1	1	2.16	1.40*	1.80*
2	1	2.0	1.35*	1.74
3	1	2.0	1.21	1.60*
4	1	2.0	1.19	1.60*
5	1	2.0	0.78	1.50*
6	1	2.0	0.45	0.70
7	1	2.0	0.35	0.62
8	1	2.0	0.28	0.55
*MEANS "EXTRA" GAINS				

CURRENT ALLOCATION				
BAND	×1	×2	LUNAR	SOLAR
1	1	2	2	2
2	1	2	4	4
3	1	2	3	3
4	1	2	1	3
5	1	2	3	1
6	1	2	3	4
7	1	2	3	4
8	1	2	3	4

11/91
91-0838-102B

NOMINAL SNR EXPECTED EXCEEDS REQUIREMENTS

HUGHES

SANTA BARBARA RESEARCH CENTER
a subsidiary

BAND	λ_{CENTER}	SNR, 4:1 TDI	SNR, 2:1 TDI	SPEC
1	412	974	728	499
2	443	1040	781	674
3	490	1100	833	667
4	510	1040	782	616
5	555	967	722	581
6	670	797	584	447
7	765	874	645	455
8	864	770	563	467

- ESTIMATE ASSUMES RESISTOR NOISE LIMITED PREAMP, AND SPECIFIED MINIMUM RESPONSIVITIES AND OPTICAL THROUGHPUT

GOOD SNR IS MAINTAINED AT REDUCED SIGNAL LEVELS

HUGHES

SANTA BARBARA RESEARCH CENTER
a subsidiary

SIGNAL TO NOISE RATIO AS A FUNCTION OF SIGNAL LEVEL, BAND 3 (SHOT NOISE LIMITED)

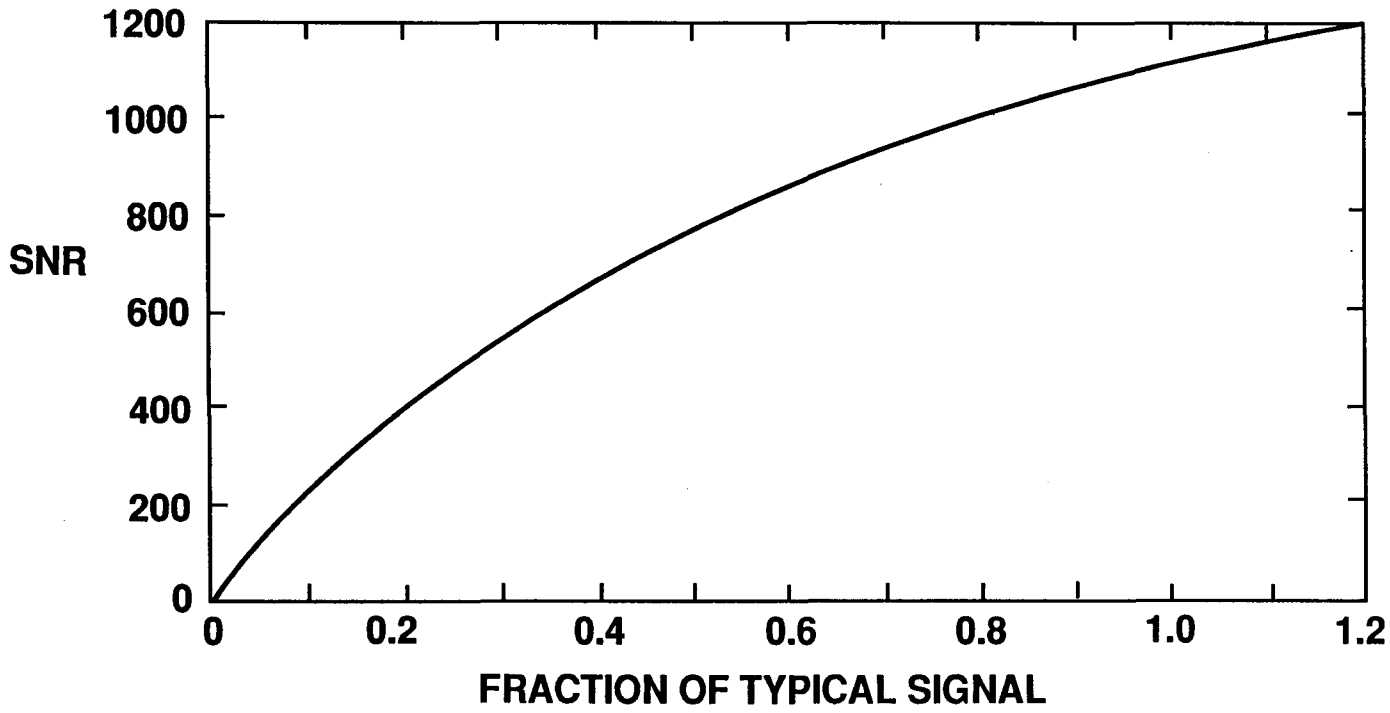

11/91
91-0838-104

MEASUREMENTS OF PREAMPLIFIER SPOT NOISE INDICATE RESISTOR NOISE LIMITED PERFORMANCE CAN BE EXPECTED

HUGHES

SANTA BARBARA RESEARCH CENTER
a subsidiary

1.35*
$\mu V/\sqrt{Hz}$

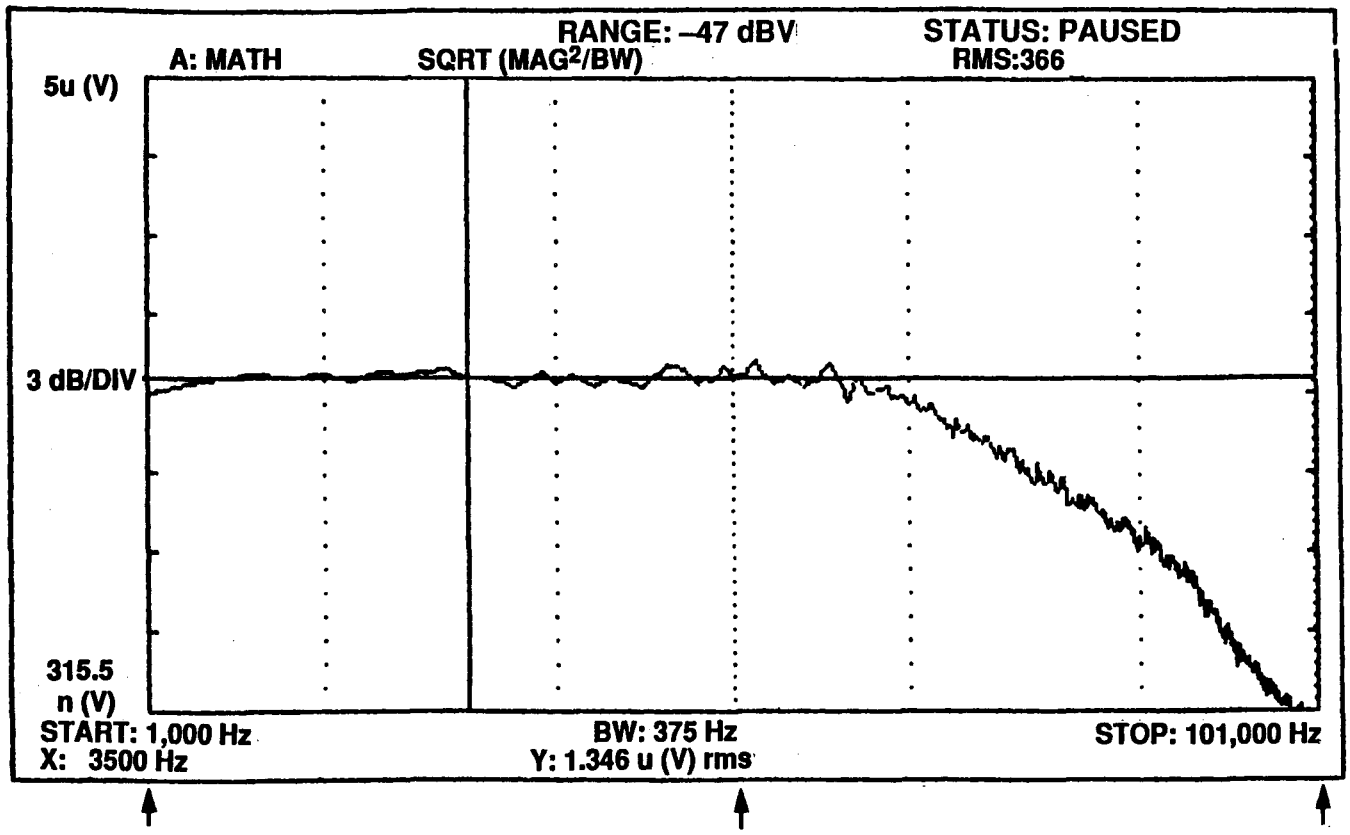

1000 Hz

100,000 Hz

*THEORETICAL NOISE FIGURE IS 1.28 $\mu V/\sqrt{Hz}$

11/91
91-0838-105

BRIGHT TARGET RECOVERY DESIGN CRITERIA

HUGHES

SANTA BARBARA RESEARCH CENTER
a subsidiary

BAND	BRIGHT SCENE RADIANCE	$L_{TYPICAL}$ RADIANCE	0.005 $L_{T/B}$ IN %
1	57.5	9.10	0.0791
2	58.5	8.41	0.0719
3	54.0	6.56	0.0607
4	54.0	5.44	0.0503
5	53.0	4.46	0.0421
6	47.0	2.60	0.0276
7	37.3	1.61	0.0216
8	28.6	1.09	0.0191

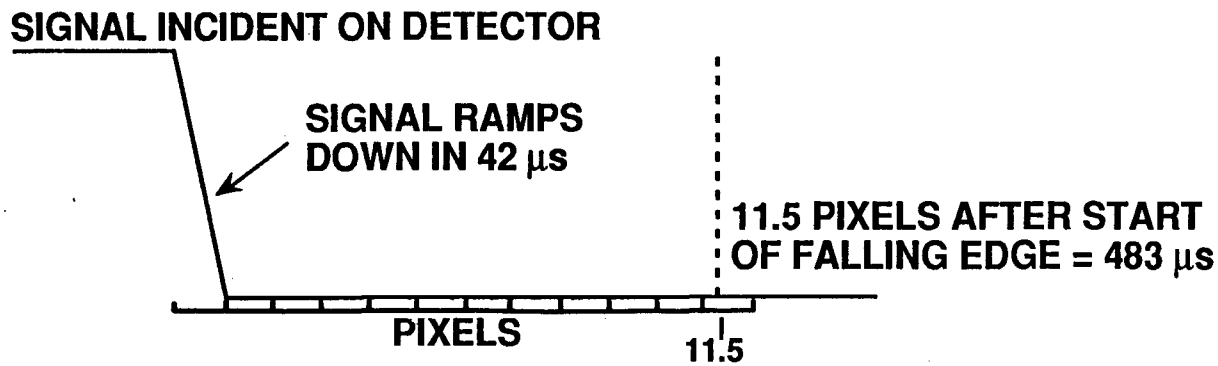

11/91
91-0838-106

EARLY FPA MEASUREMENTS INDICATE THAT BRIGHT TARGET RECOVERY CRITERIA CAN BE MET

HUGHES

SANTA BARBARA RESEARCH CENTER
a subsidiary

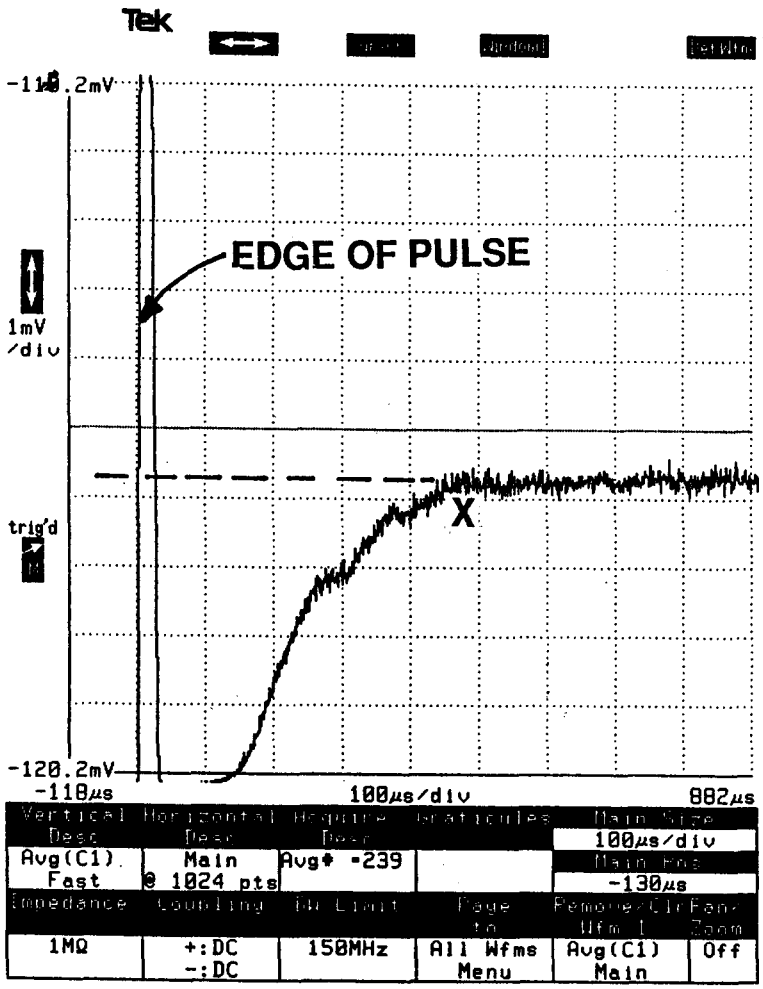

- SeaWiFS 1x8 FOCAL PLANE ARRAY
- CLOUD EDGE SIMULATED WITH CHOPPER
- RESULTS FOR FIRST DETECTOR SHADOWED
- 800 nm ILLUMINATION WAVELENGTH

X SIGNIFIES SPEC REQUIREMENT

11/91
91-0838-107

POINTING BUDGET, ALONG TRACK (Y) DIRECTION		230
(ALL UNITS ARE IN MICRORADS)		
SCANNING COMPONENTS		
BAND TO BAND		
BAND 7 ALIGNMENT KNOWLEDGE	64	
BAND X ALIGNMENT KNOWLEDGE	64	
TOTAL BAND 7 TO BAND X ALIGNMENT KNOWLEDGE		90.51
BEARING RUNOUT		
TELESCOPE BEARING RUNOUT; BAND 7 TO CUBE +X FACE	80	
HALF ANGLE BEARING RUNOUT; BAND 7 TO CUBE +X FACE	80	
HALF ANGLE BEARING CONTRIBUTION (0.4 *RUNOUT)	32	
TOTAL BEARING RUNOUT CONTRIBUTION		86.16
TILT MECHANISM		
TILT MECHANISM RANDOM VARIATION, BAND 7 TO +X FACE	80	
Y AXIS UP; BAND 7, PIXEL 643 ALIGNMENT KNOWLEDGE	64	
Y AXIS UP; +X CUBE FACE ALIGNMENT KNOWLEDGE	50	
Y AXIS DOWN; BAND 7, PIXEL 643 ALIGNMENT KNOWLEDGE	64	
Y AXIS DOWN; +X CUBE FACE ALIGNMENT KNOWLEDGE	50	
TOTAL TILT MECHANISM RANDOM ERROR AND UNCERTAINTY		139.97
SCAN CURVATURE (DEPARTURE FROM PLANE)		
BAND 7, PIXEL X TO BAND 7, PIXEL 643		64
SCAN PLANE ANGLE KNOWLEDGE		
BAND 7, PIXEL 1	64	
CUBE FACE (+Z)	50	
TOTAL ERROR, SCAN PLANE ANGLE		81.22
THERMAL COMPONENTS		
DIFFERENTIAL STRUT DEFORMATION		50
YOKE DEFORMATION		50
PRIMARY MIRROR MOUNT DEFORMATION		25
TILT MECHANISM DEFORMATION		50
STRESS COMPONENTS		
RESIDUAL BALL BUSHING TELESCOPE PIVOT ERROR		25
TOTAL RMS ERROR, ALONG TRACK DIRECTION		233.77

HUGHES

SANTA BARBARA RESEARCH CENTER
a subsidiary

ALONG TRACK ERROR BUDGET ILLUSTRATES CHALLENGE OF HOLDING AND MEASURING TIGHT ANGULAR ALIGNMENTS

SeaWiFS

11/91
91-0838-109

POINTING BUDGET, CROSS TRACK (Z) DIRECTION		230
(ALL UNITS ARE IN MICRORADS)		
SCANNING COMPONENTS		
BAND TO BAND REGISTRATION		
BAND 7 ALIGNMENT KNOWLEDGE	64	
BAND X ALIGNMENT KNOWLEDGE	64	
TOTAL BAND 7 TO BAND X ALIGNMENT KNOWLEDGE		90.51
NADIR POSITION		
NADIR POSITION, BAND 7 POSITION KNOWLEDGE	64	
NADIR POSITION, +X ALIGNMENT CUBE FACE KNOWLEDGE	50	
TOTAL NADIR POSITION DETERMINATION ERROR		81.22
SCAN NONLINEARITY VARIATION		
BAND 7, PIXEL 643 KNOWLEDGE	64	
BAND 7, PIXEL X KNOWLEDGE	64	
ROTARY STAGE ANGLE ERROR	50	
TOTAL NONLINEARITY ERROR		103.40
START PULSE JITTER, BAND 7, PIXEL 1		50
TELESCOPE MOTOR SPEED VARIATIONS, PIXEL 1 TO PIXEL X	25	
HALF ANGLE MOTOR SPEED VARIATIONS, PIXEL 1 TO PIXEL X	300	
HALF ANGLE CONTRIBUTION TIMES 0.4	120	
TOTAL MOTOR SPEED VARIATION ERROR		122.58
THERMAL COMPONENTS		
DIFFERENTIAL STRUT DEFORMATION		50
YOKE DEFORMATION		50
PRIMARY MIRROR MOUNT DEFORMATION		25
OPTICAL BENCH DEFORMATION		50
STRESS COMPONENTS		
RESIDUAL BALL BUSHING TELESCOPE PIVOT ERROR		25
TOTAL RMS ERROR, CROSS TRACK DIRECTION		**227.50**

HUGHES

SANTA BARBARA RESEARCH CENTER
a subsidiary

CROSS TRACK ERROR BUDGET IS EQUALLY CHALLENGING

SeaWiFS™

11/91
91-0838-110

TELESCOPE ENCODER CONTROLS DATA SAMPLING, ELIMINATING FIRST ORDER POSITION ERRORS DUE TO SPEED VARIATIONS

HUGHES

SANTA BARBARA RESEARCH CENTER
a subsidiary

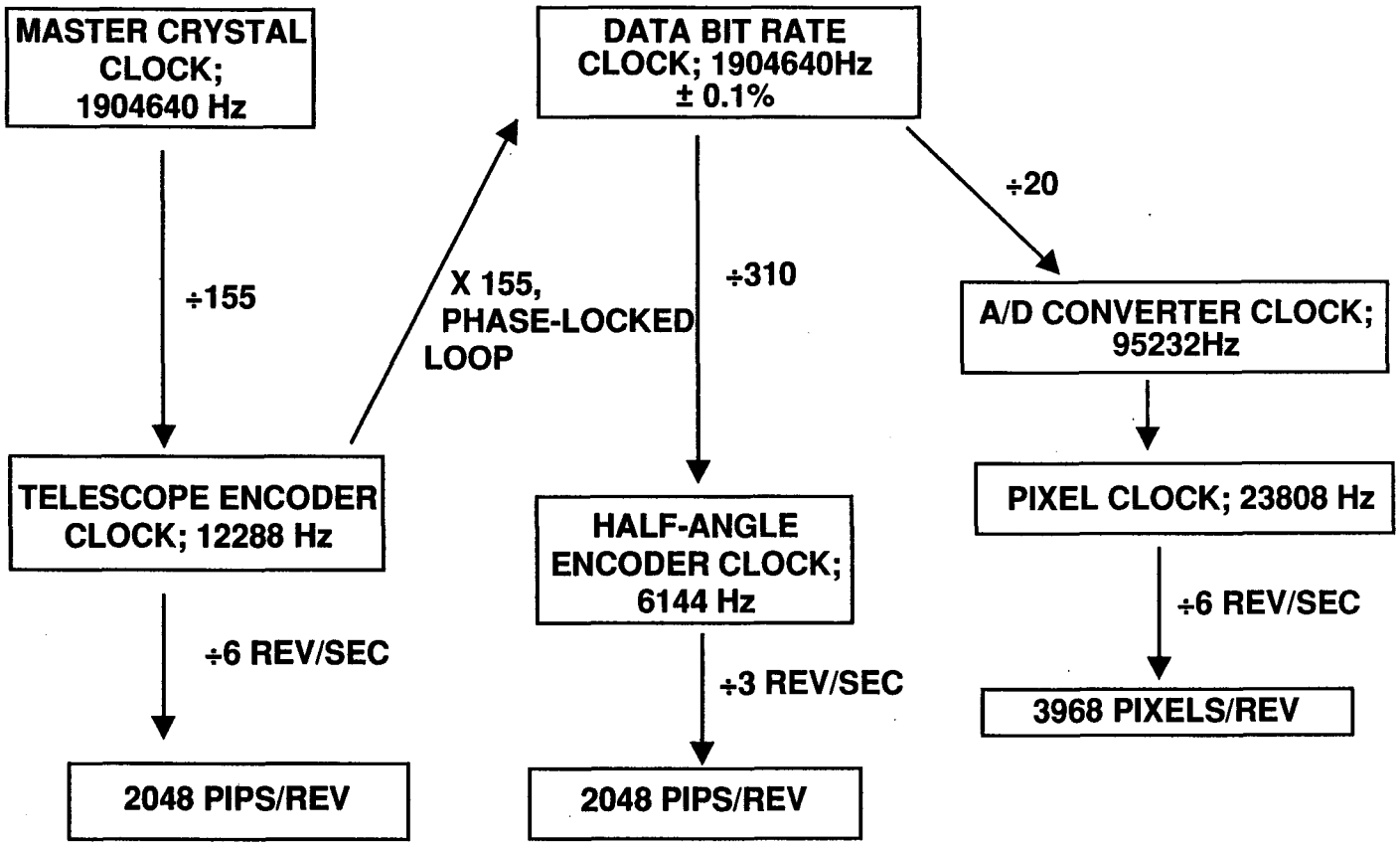

11/91
91-0838-112

BAND-TO-BAND REGISTRATION BUDGET IS ACHIEVABLE

HUGHES

SANTA BARBARA RESEARCH CENTER
a subsidiary

ERROR SOURCE	ALLOTMENT
FOCAL LENGTH ERROR (±1% RMS)	
BAND X TO AVERAGE	128 μrads
BAND Y TO AVERAGE	128 μrads
*ALIGNMENT ERROR (±0.1 PIXEL RMS)	
BAND X TO AVERAGE	160 μrads
BAND Y TO AVERAGE	160 μrads
POSITION DETERMINATION ERROR (±0.04 PIXEL RMS)	
BAND X TO AVERAGE	64 μrads
BAND Y TO AVERAGE	64 μrads
RMS ERROR, BAND X TO BAND Y	303 μrads
REQUIREMENT	480 μrads

*ELECTRONIC HOLDOFF WILL BE USED TO REDUCE THIS ERROR SOURCE

11/91
91-0838-111

NOMINAL MTF PREDICTION (ALONG SCAN) INDICATES SPECIFICATION WILL BE COMFORTABLY MET

HUGHES

SANTA BARBARA RESEARCH CENTER
a subsidiary

GROUND TARGET HALF CYCLE SIZE, Km	1.13	1.70	2.26	4.52	>25
1 CYCLE SIZE, PIXELS	2.0	3.0	4.0	8.0	>44
MTF DEGRADATION SOURCE	MTF CONTRIBUTION				
• FINITE GOLDBERG FILTER BANDWIDTH (11905 Hz 3 dB BANDWIDTH)	0.701	0.871	0.921	0.977	0.999
• TDI SAMPLING ERROR (±0.05 PIXEL)	0.996	0.998	0.999	1.0	1.0
• OPTICAL BLUR (0.25 PIXEL DIAMETER SPOT)	0.982	0.992	0.995	0.998	1.0
• FINITE PIXEL SIZE (1.6 × 1.6 mR)	0.644	0.831	0.903	0.975	0.999
SYSTEM MTF	0.44	0.72	0.83	0.95	1.00
SPECIFICATION MTF	0.30	0.50	0.70	0.90	1.00

NOMINAL MTF PREDICTION (ALONG TRACK) IS ALSO WITHIN SPECIFICATION

HUGHES

SANTA BARBARA RESEARCH CENTER
a subsidiary

GROUND TARGET HALF CYCLE SIZE, Km	1.13	1.70	2.26	4.52	>25
1 CYCLE SIZE, PIXELS	2.0	3.0	4.0	8.0	>44
MTF DEGRADATION SOURCE	MTF CONTRIBUTION				
• OPTICAL BLUR (0.25 PIXEL DIAMETER SPOT)	0.982	0.992	0.995	0.998	1.0
• GHOST IMAGE REFLECTION (TWO 2.5 PIXEL DIA. SPOTS 7 PIXELS APART)	0.982	0.994	0.992	0.990	0.999
• FINITE PIXEL SIZE (1.6 × 1.6 mR)	0.644	0.831	0.903	0.975	0.999
SYSTEM MTF	0.62	0.82	0.89	0.96	1.00
SPECIFICATION MTF	0.30	0.50	0.70	0.90	1.00

SOLAR CALIBRATOR DESIGN PROTECTS DIFFUSER SURFACE

HUGHES

SANTA BARBARA RESEARCH CENTER
a subsidiary

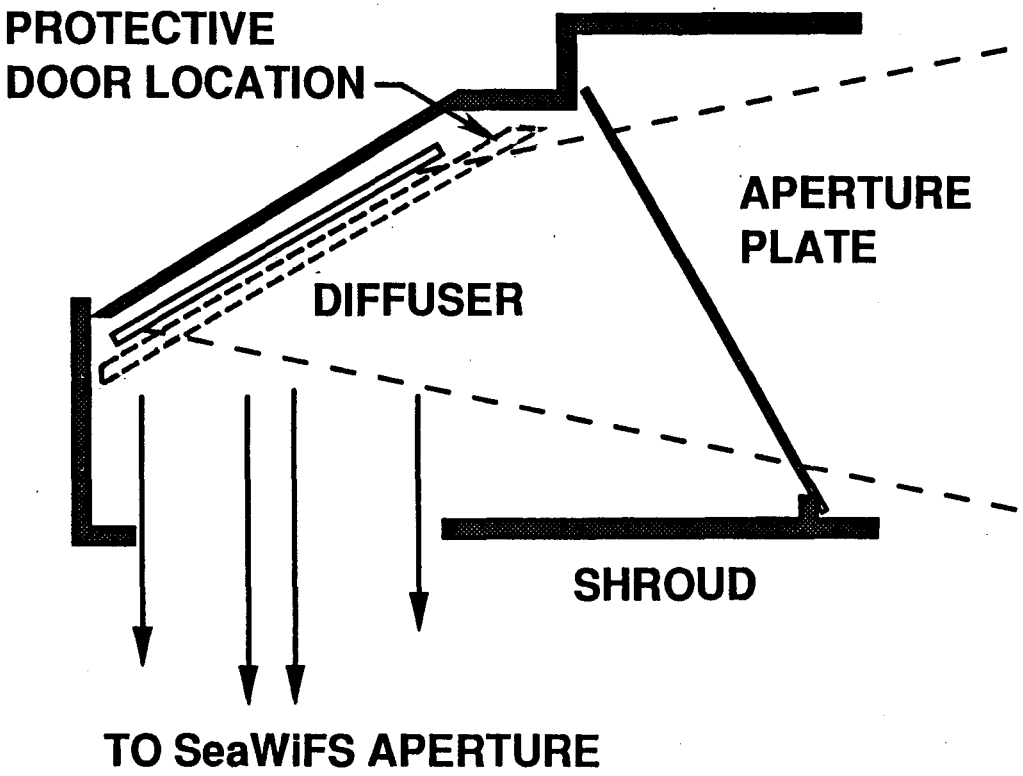

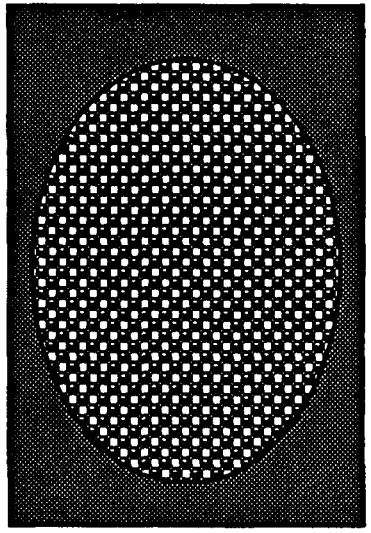

FACING VIEW

11/91
91-0838-120

YB71 DIFFUSER MATERIAL EXHIBITED EXCELLENT LONGEVITY ABOARD LDEF

HUGHES

SANTA BARBARA RESEARCH CENTER
a subsidiary

YB71 over Z93 - Sample C93

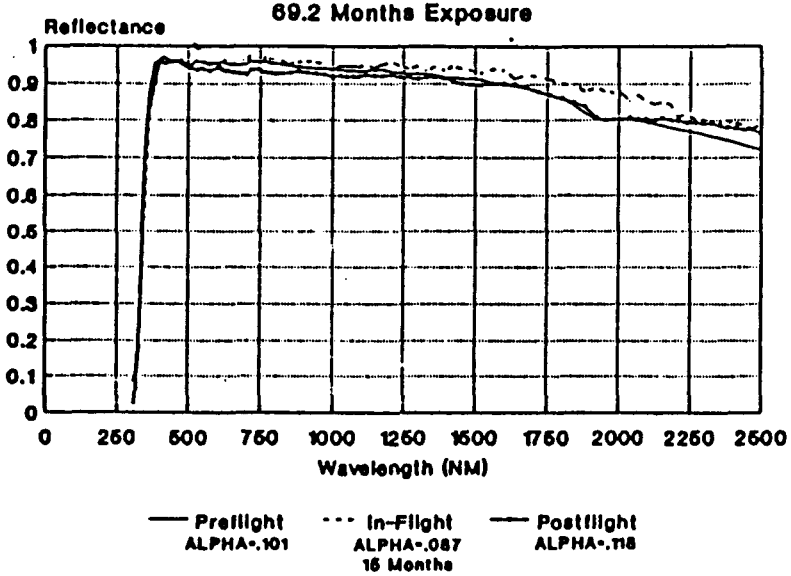

YB71 over Z93 - Sample C93

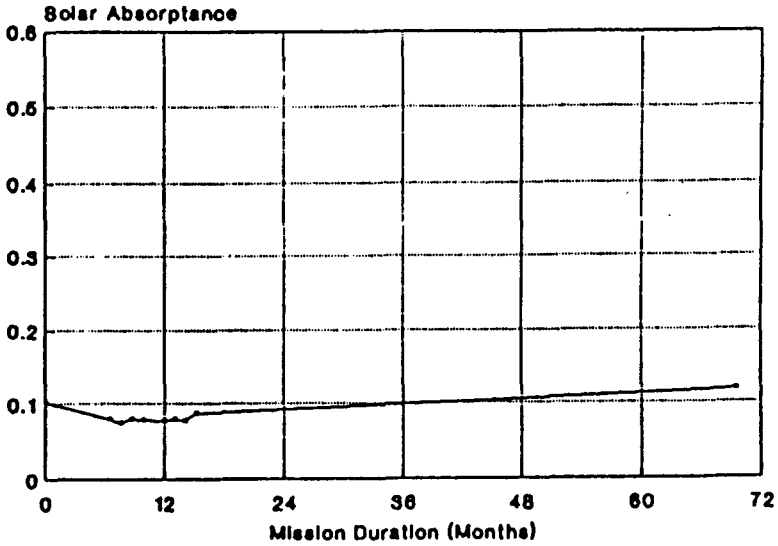

–INFORMATION COURTESY OF D. WILKES AT AZTECH

11/91
91-0838-121

APERTURE PLATE CONFIGURATION MINIMIZES STRIPING AND COSINE EFFECT

HUGHES

SANTA BARBARA RESEARCH CENTER
a subsidiary

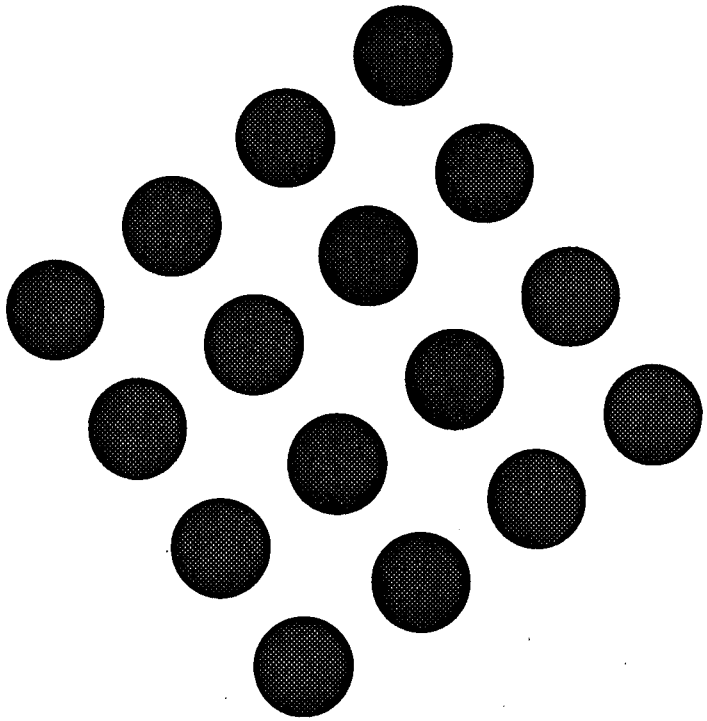

HOLES ARE 17 MIL DIAMETER ON 25 MIL CENTERS. PATTERN IS ROTATED 35 DEGREES TO MINIMIZE STRIPING.

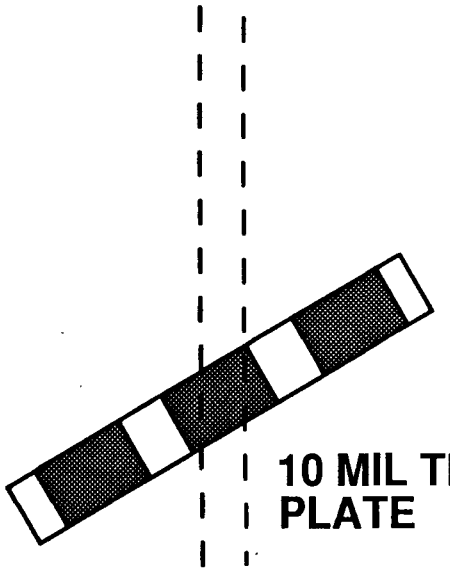

BLACK ANODIZED ALUMINUM PLATE IS CANTED 30 DEGREES TO ELIMINATE SPECULAR REFLECTIONS AND COMPENSATE COSINE EFFECT

11/91
91-0838-122

TILTED APERTURE PLATE COMPENSATES SEASONAL ILLUMINATION ANGLE VARIATIONS

HUGHES

SANTA BARBARA RESEARCH CENTER
a subsidiary

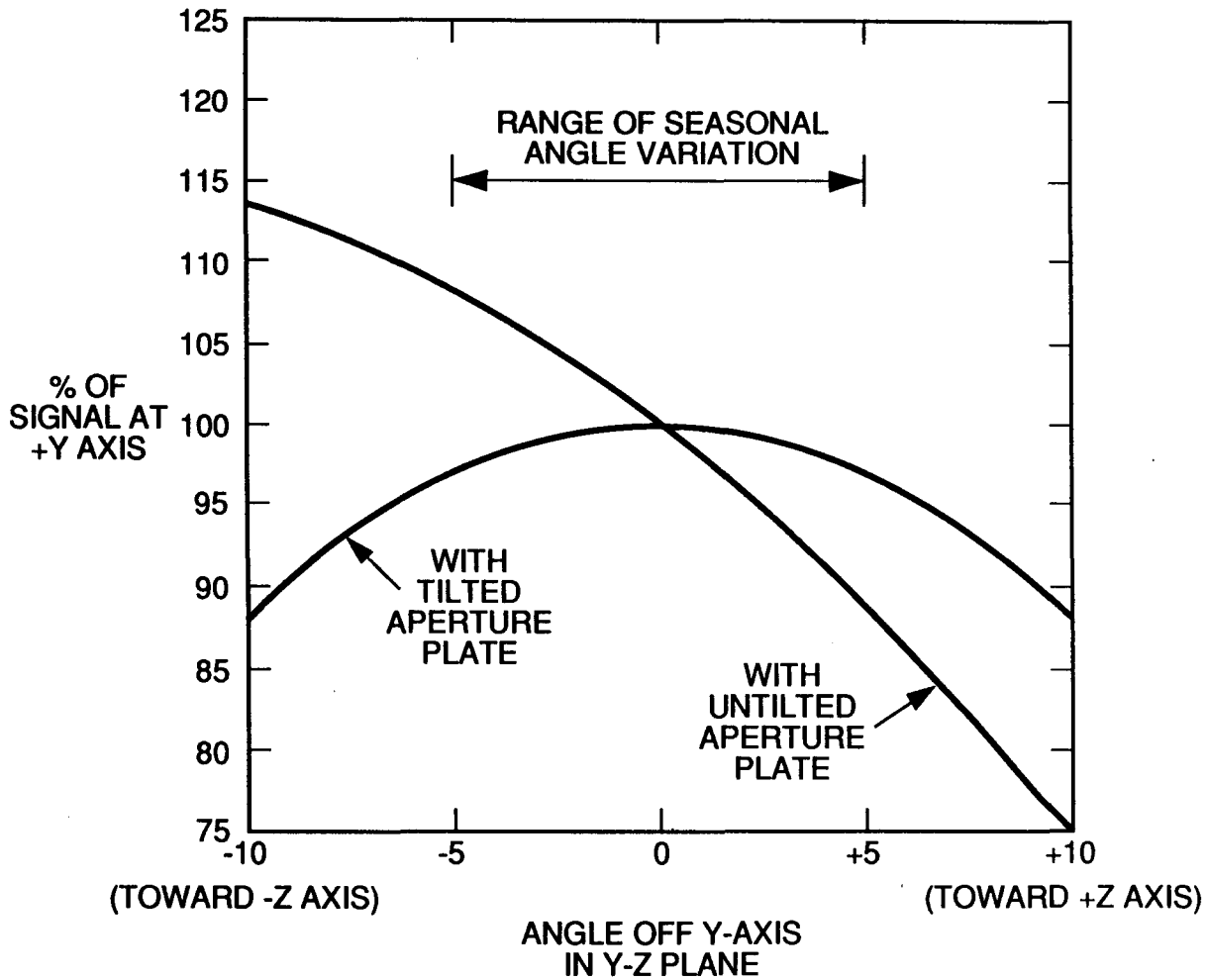

11/91
91-0838-123

SOLAR CALIBRATOR FEATURES ENHANCE STABILITY AND UNIFORMITY

HUGHES

SANTA BARBARA RESEARCH CENTER
a subsidiary

FEATURE	ATTRIBUTE
• YB-71 DIFFUSER COATING	DURABLE FLAT WHITE COATING WITH PROVEN ORBITAL STABILITY
• NOMINAL 60° ILLUMINATION ANGLE	AVOIDS POSSIBLE SPECULAR GLINTS; REDUCES FLUX DENSITY ON DIFFUSER BY 2X
• APERTURE PLATE WITH HOLES	ATTENUATES SUNLIGHT, FURTHER REDUCING FLUX ON DIFFUSER TO 0.1 SUN
• SMALL HOLE SIZE AND CLOSE SPACING	IMAGES OF SUN PARTIALLY OVERLAP ON DIFFUSER
• ROTATED HOLE PATTERN	PREVENTS STRIPING
• TILTED APERTURE PLATE WITH CONTROLLED THICKNESS	REDUCES ILLUMINATION ANGLE-INDUCED SIGNAL VARIATIONS; PREVENTS APERTURE PLATE GLINTS FROM REACHING DIFFUSER
• SPACING BETWEEN APERTURE PLATE AND DIFFUSER	REDUCES APERTURE PLATE REFLECTION ONTO DIFFUSER TO LESS THAN 1% OF TOTAL

CURRENT UNDERSTANDING OF TILT SCHEDULE DURING AN ORBIT

HUGHES

SANTA BARBARA RESEARCH CENTER
a subsidiary

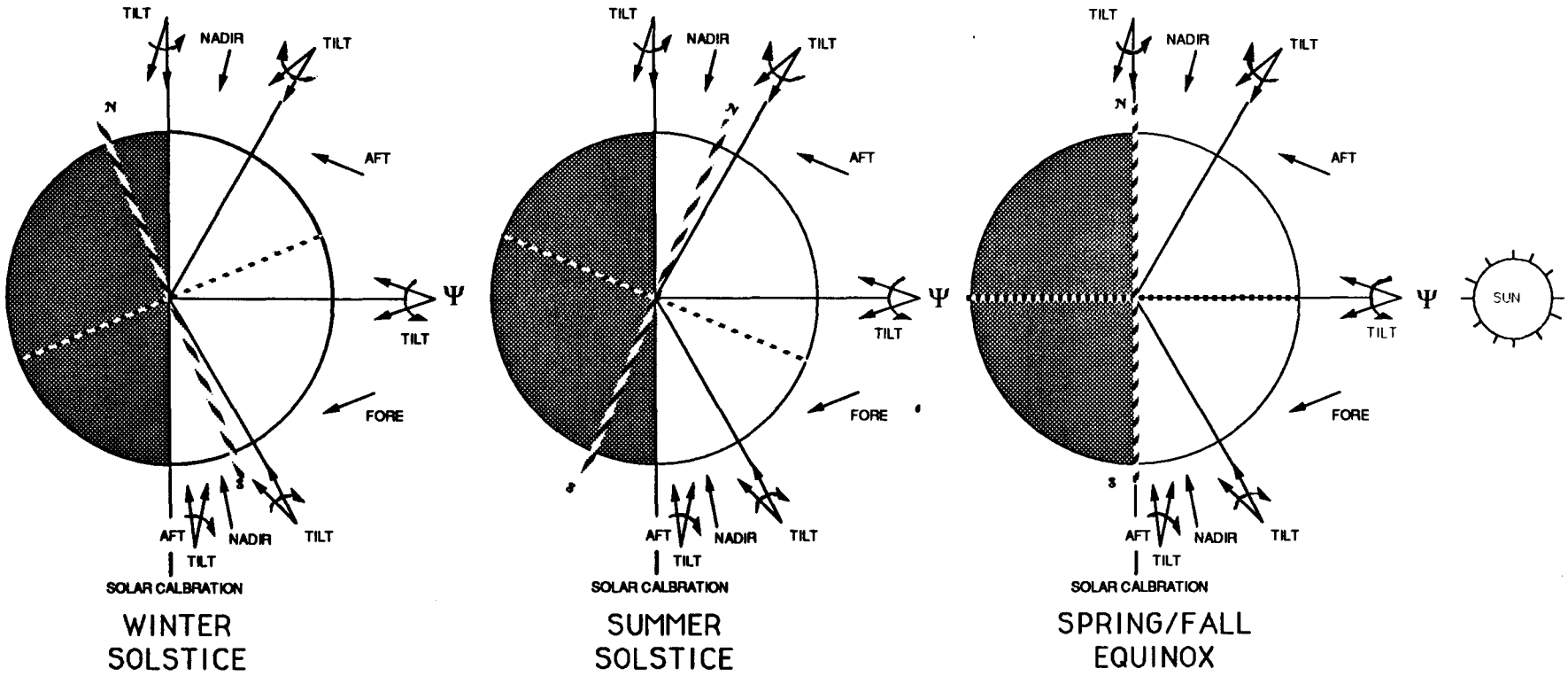

11/91
91-0838-125A

OPTICS

GARY MOORE

11/91
91-0838-200

SeaWiFS OPTICAL LAYOUT

HUGHES

SANTA BARBARA RESEARCH CENTER
a subsidiary

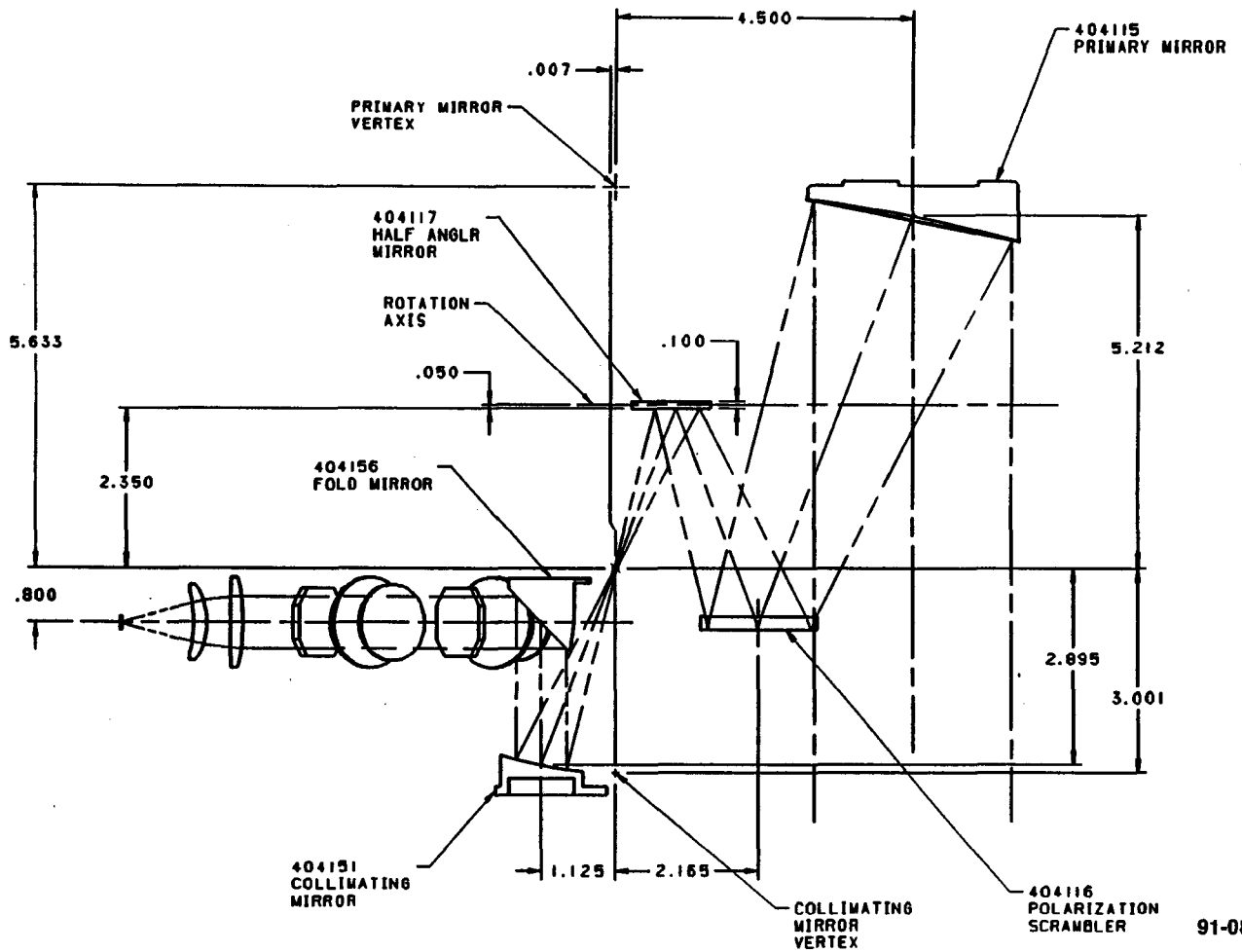

11/91
91-0838-201

TELESCOPE OPTICAL ELEMENTS

11/91
91-0838-202

ROTATING TELESCOPE OPTICAL ASSEMBLY

HUGHES

SANTA BARBARA RESEARCH CENTER
a subsidiary

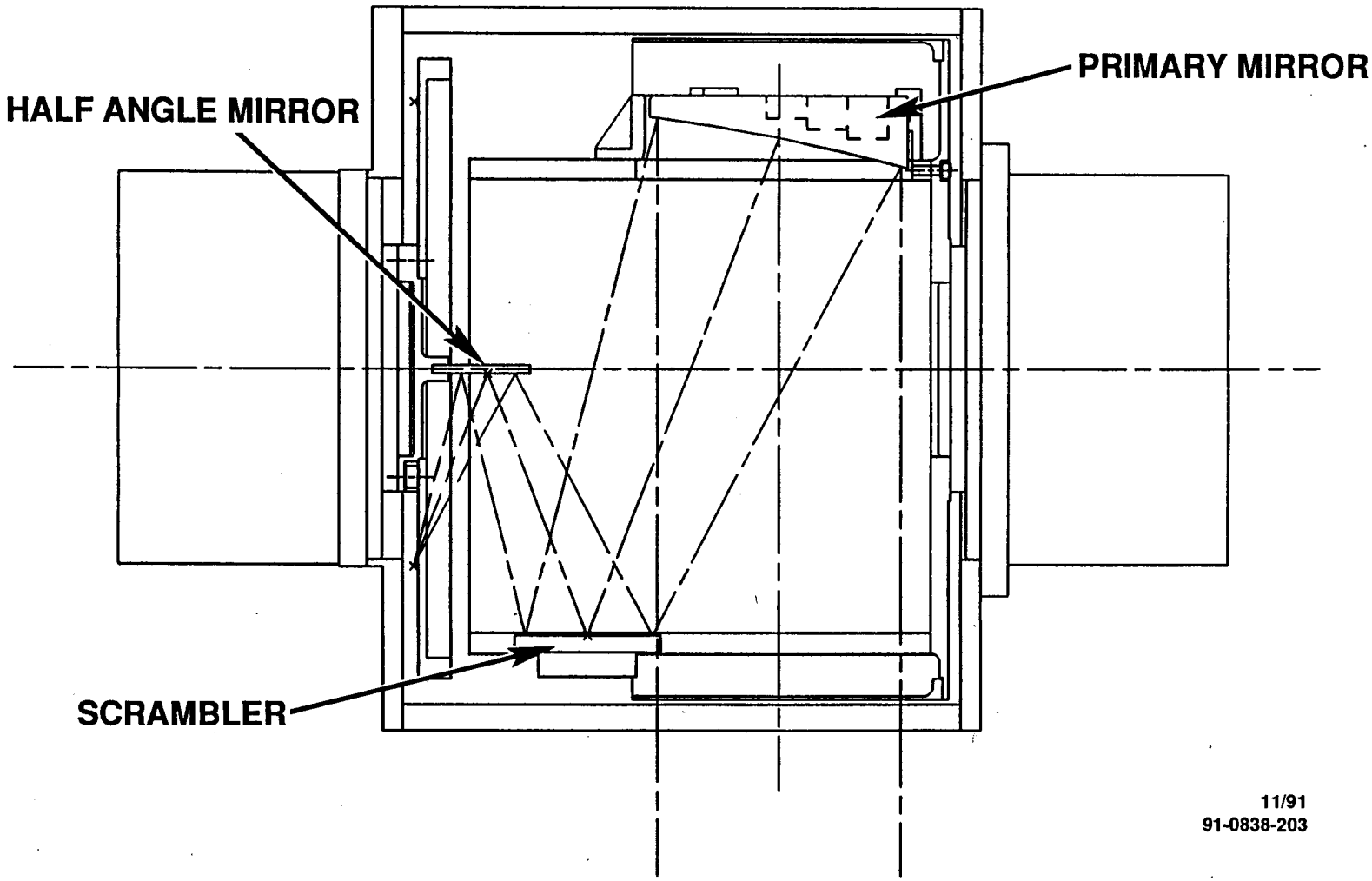

11/91
91-0838-203

PRIMARY MIRROR IS DIAMOND-TURNED ALUMINUM, NICKEL PLATED, AND POST-TURNING POLISHED

HUGHES

SANTA BARBARA RESEARCH CENTER
a subsidiary

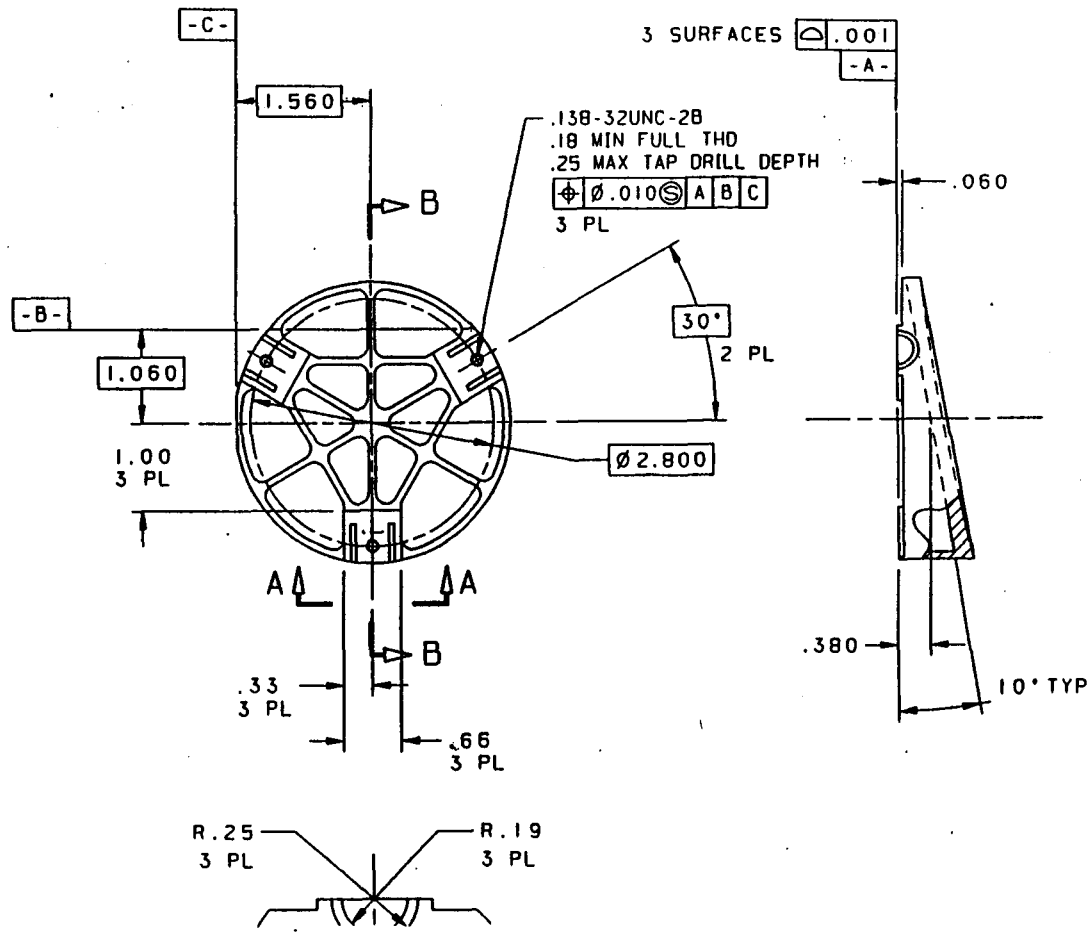

11/91
91-0838-204

EDGE OF PRIMARY IS OBSTRUCTED BY POLARIZATION SCRAMBLER

HUGHES

SANTA BARBARA RESEARCH CENTER
a subsidiary

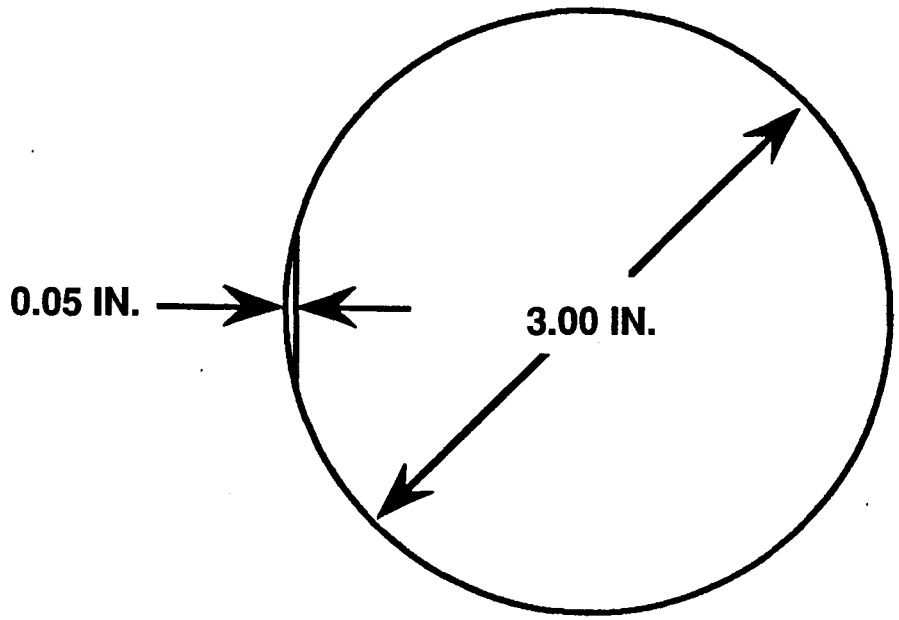

APERTURE STOP

11/91
91-0838-205

POLARIZATION SCRAMBLER IS A CRYSTALLINE MgF_2 WEDGE

HUGHES

SANTA BARBARA RESEARCH CENTER
a subsidiary

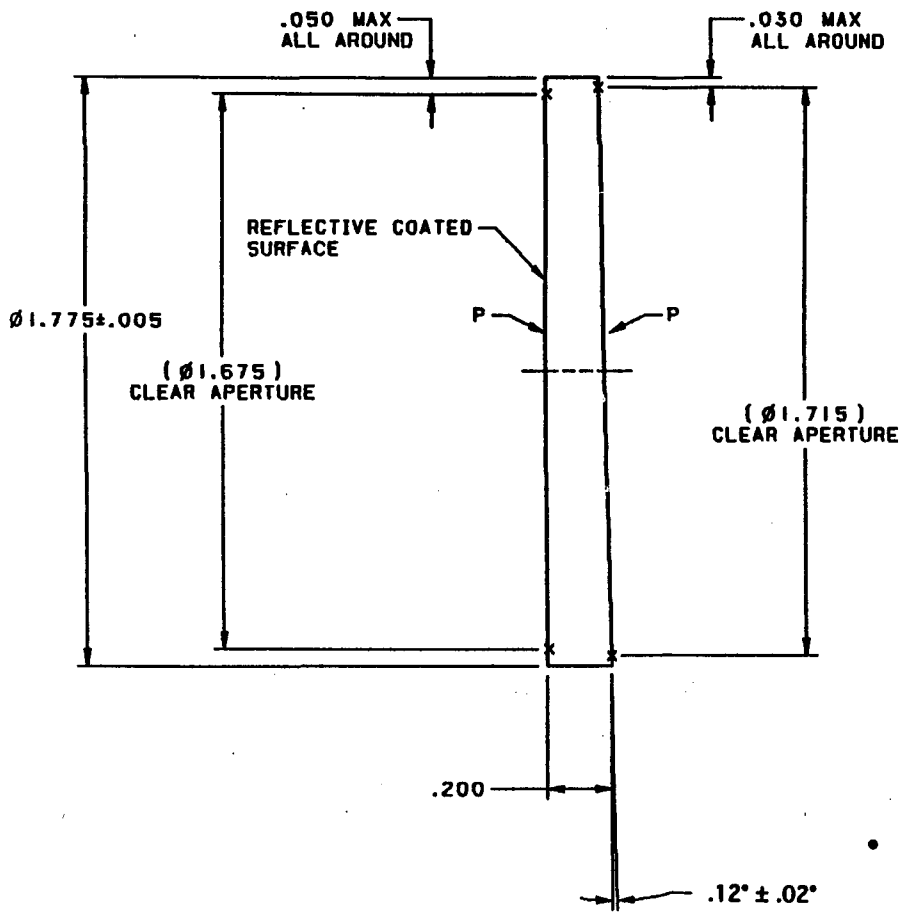

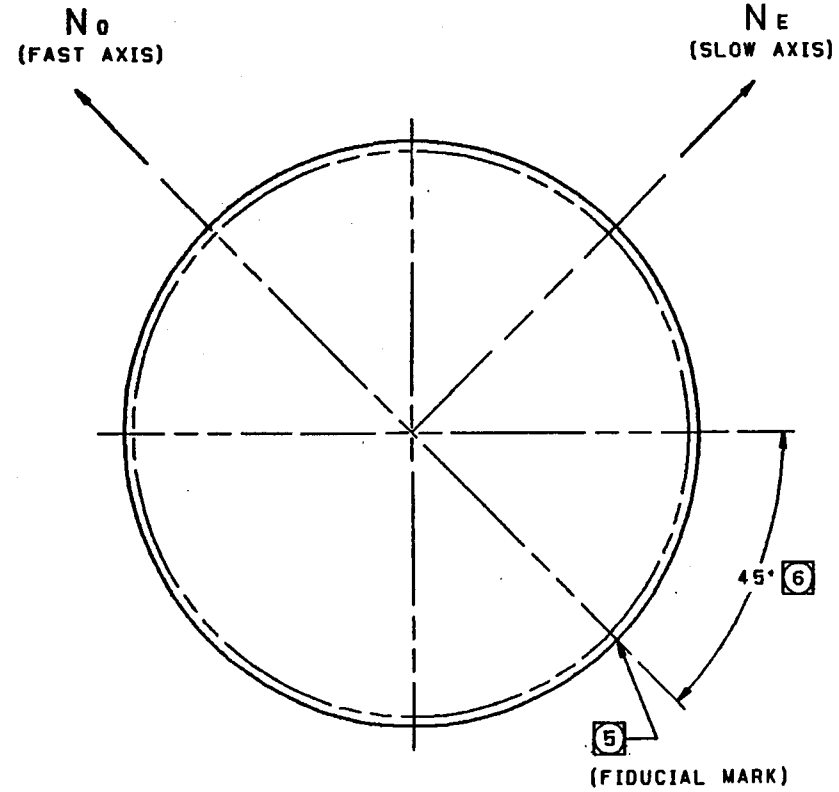

- SCRAMBLER IS USED AS A SECOND SURFACE MIRROR

11/91
91-0838-206

POLARIZATION SCRAMBLER PRODUCES VARIABLE OUTPUT POLARIZATION STATE ACROSS THE APERTURE

HUGHES

SANTA BARBARA RESEARCH CENTER
a subsidiary

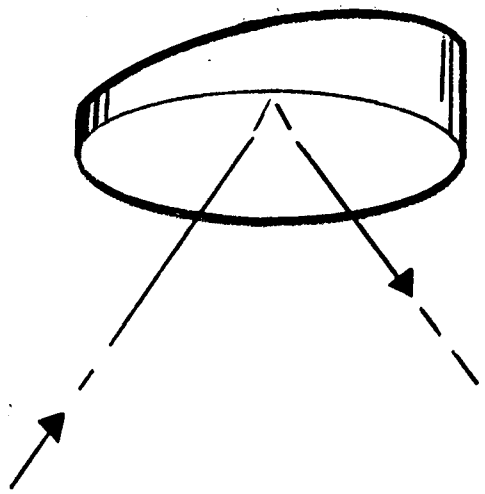

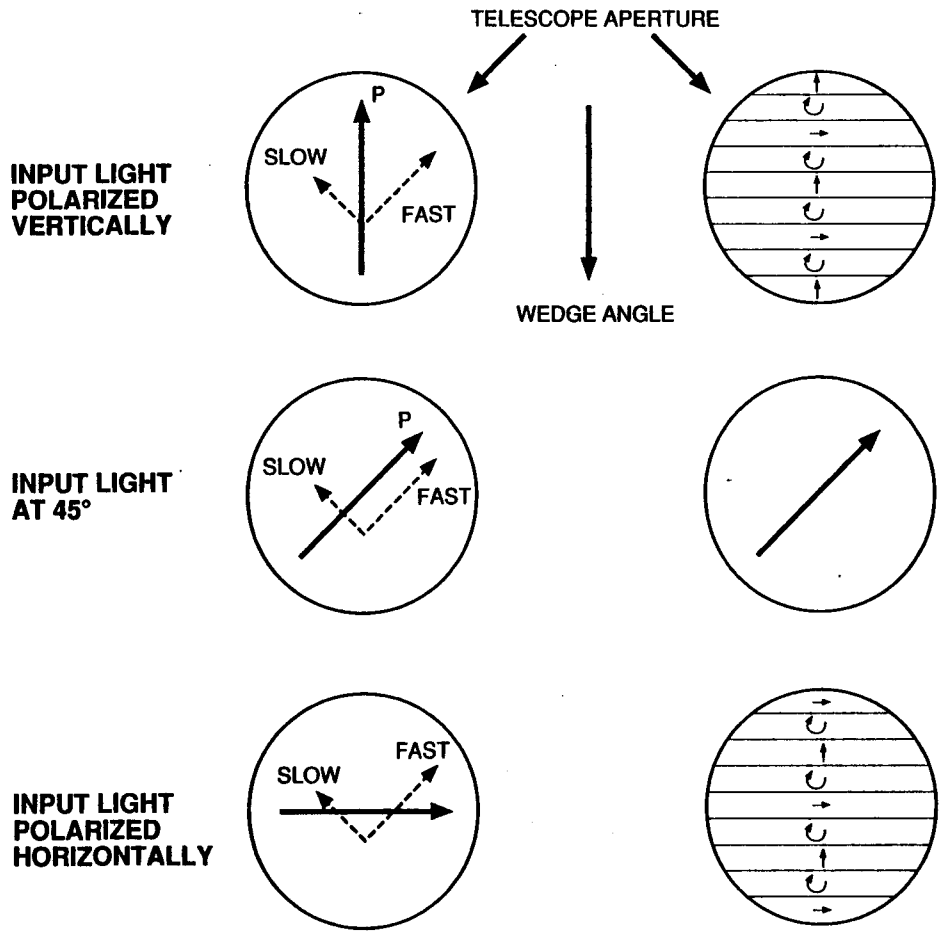

11/91
91-0838-207

PRIMARY MIRROR AND HALF-ANGLE MIRROR MOUNTING TECHNIQUES

HUGHES

SANTA BARBARA RESEARCH CENTER
a subsidiary

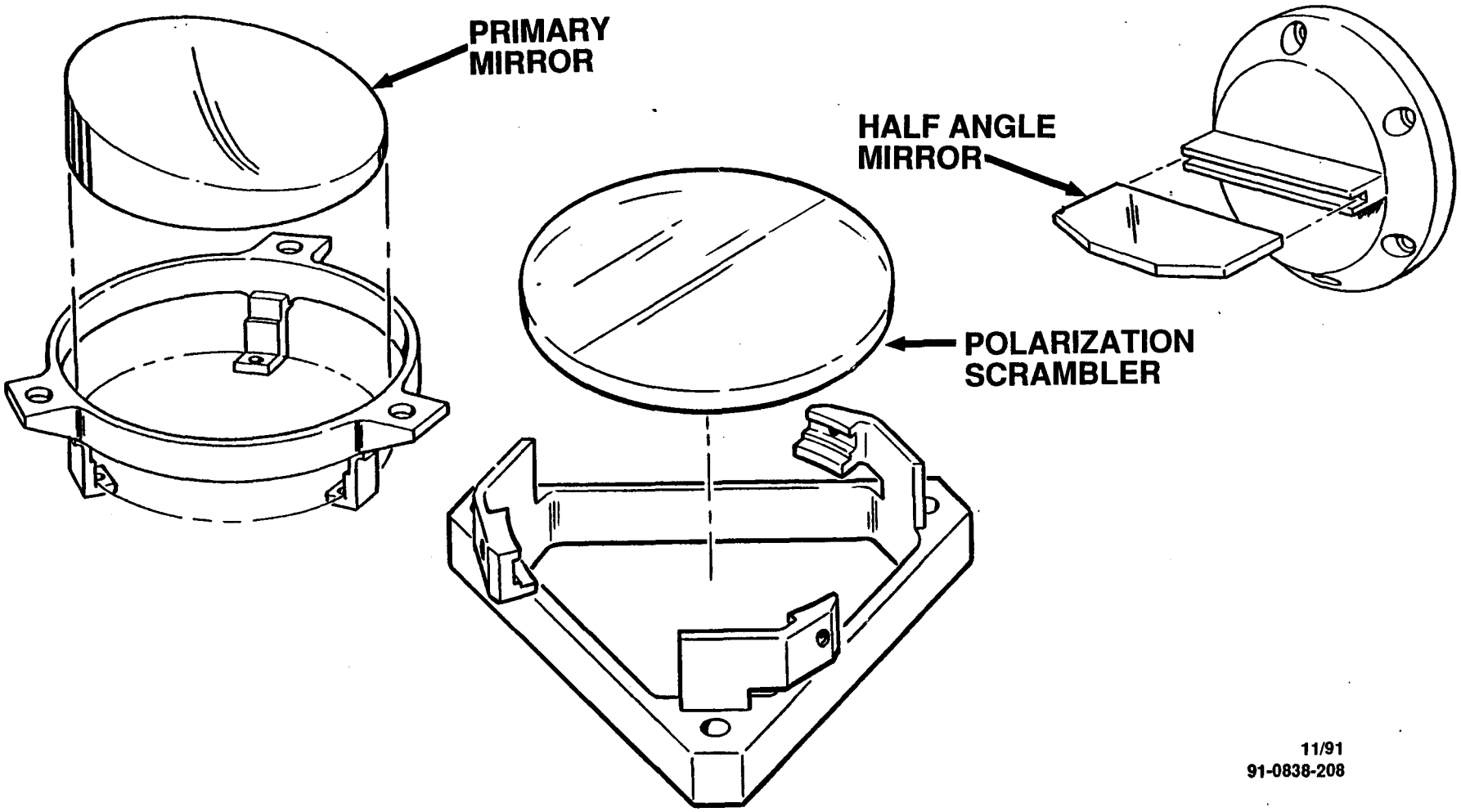

11/91
91-0838-208

PRIME FOCUS MASK PREVENTS LIGHT FROM STRIKING PHOTOSENSITIVE DETECTOR BOND PADS AND SAW CUT

HUGHES

SANTA BARBARA RESEARCH CENTER
a subsidiary

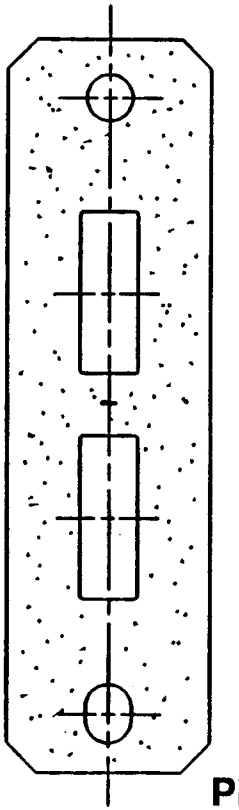

PRIME FOCUS MASK

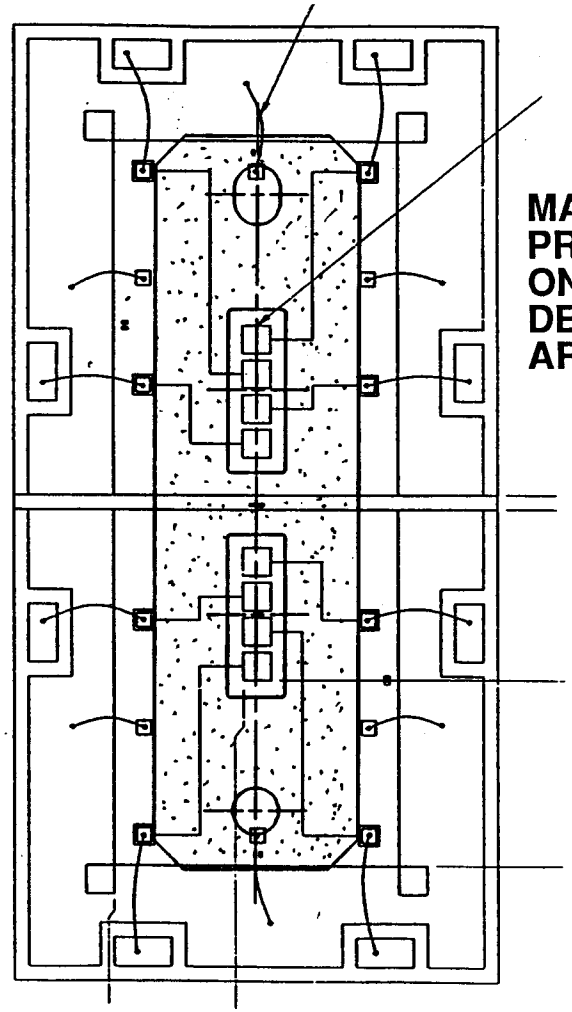

MASK PROJECTED ONTO DETECTOR ARRAY

11/91
91-0838-210

AFT OPTICAL SYSTEM

11/91
91-0838-211

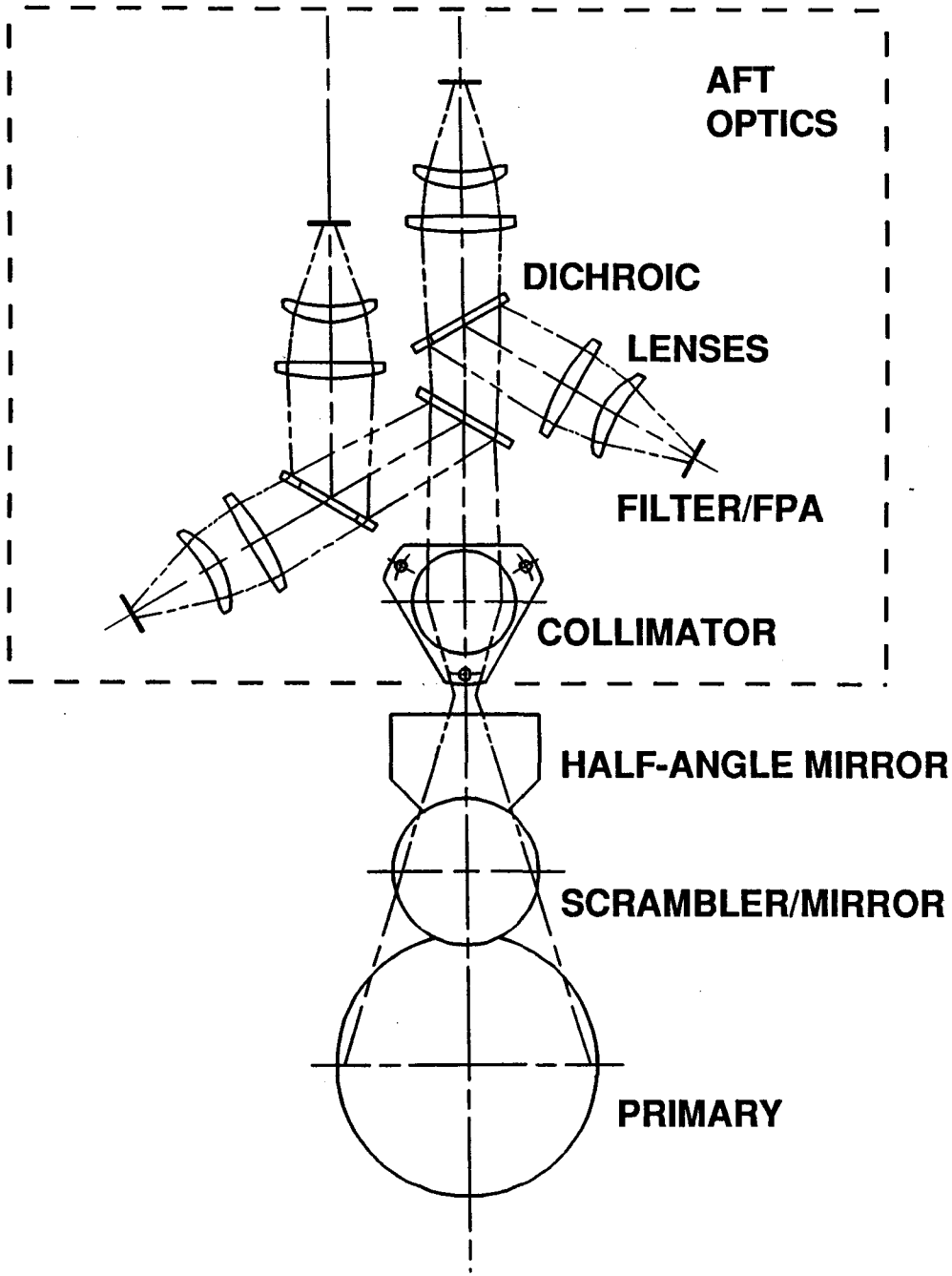

HUGHES

SANTA BARBARA RESEARCH CENTER
a subsidiary

AFT OPTICS SCHEMATIC

SeaWiFS

11/91
91-0838-212

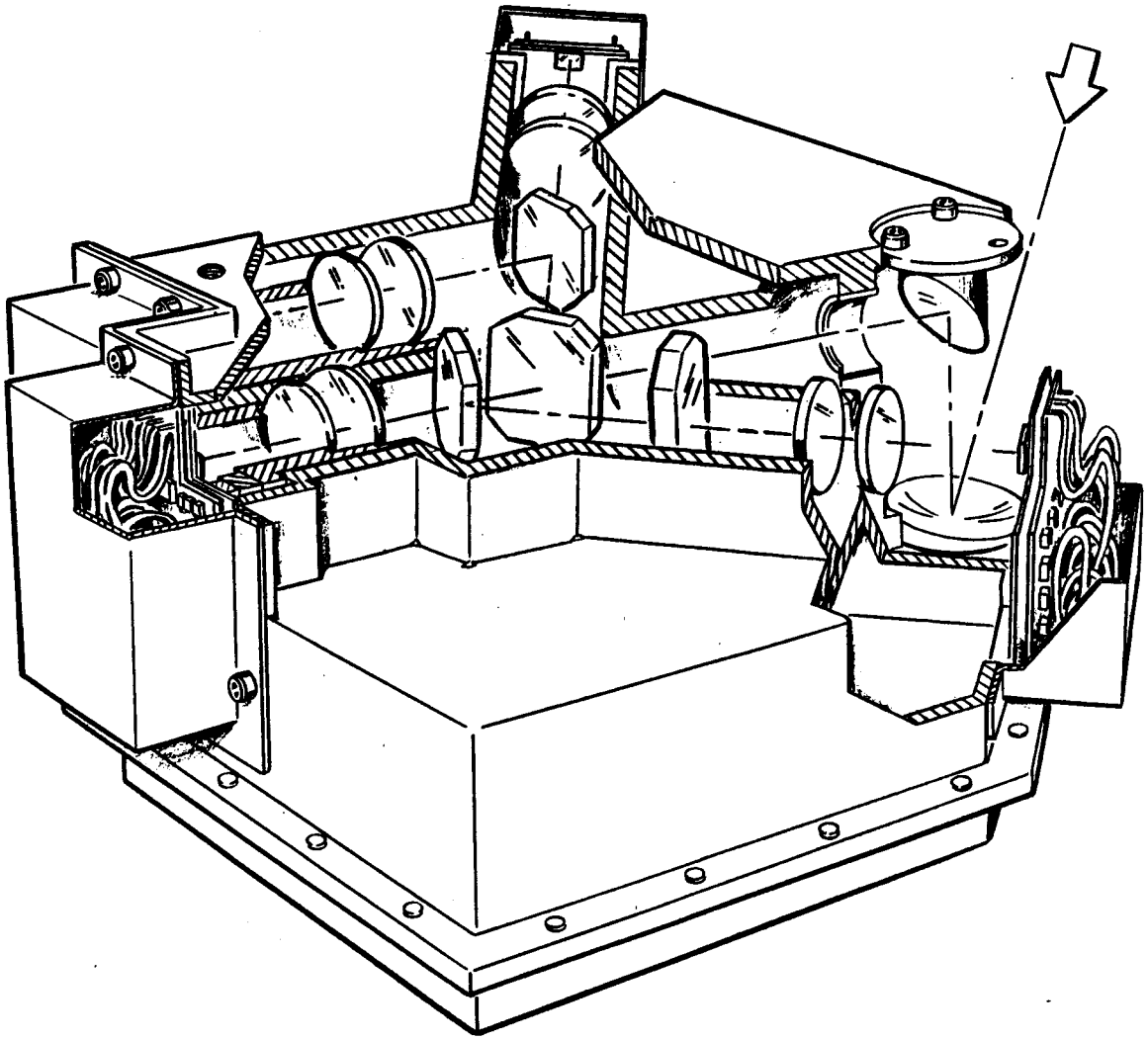

HUGHES

SANTA BARBARA RESEARCH CENTER
a subsidiary

AFT OPTICS HOUSING

SeaWiFS™

11/91
91-0838-213

COLLIMATING MIRROR IS ALSO DIAMOND-TURNED ALUMINUM TO SIMPLIFY MOUNTING OF ELEMENT

HUGHES

SANTA BARBARA RESEARCH CENTER
a subsidiary

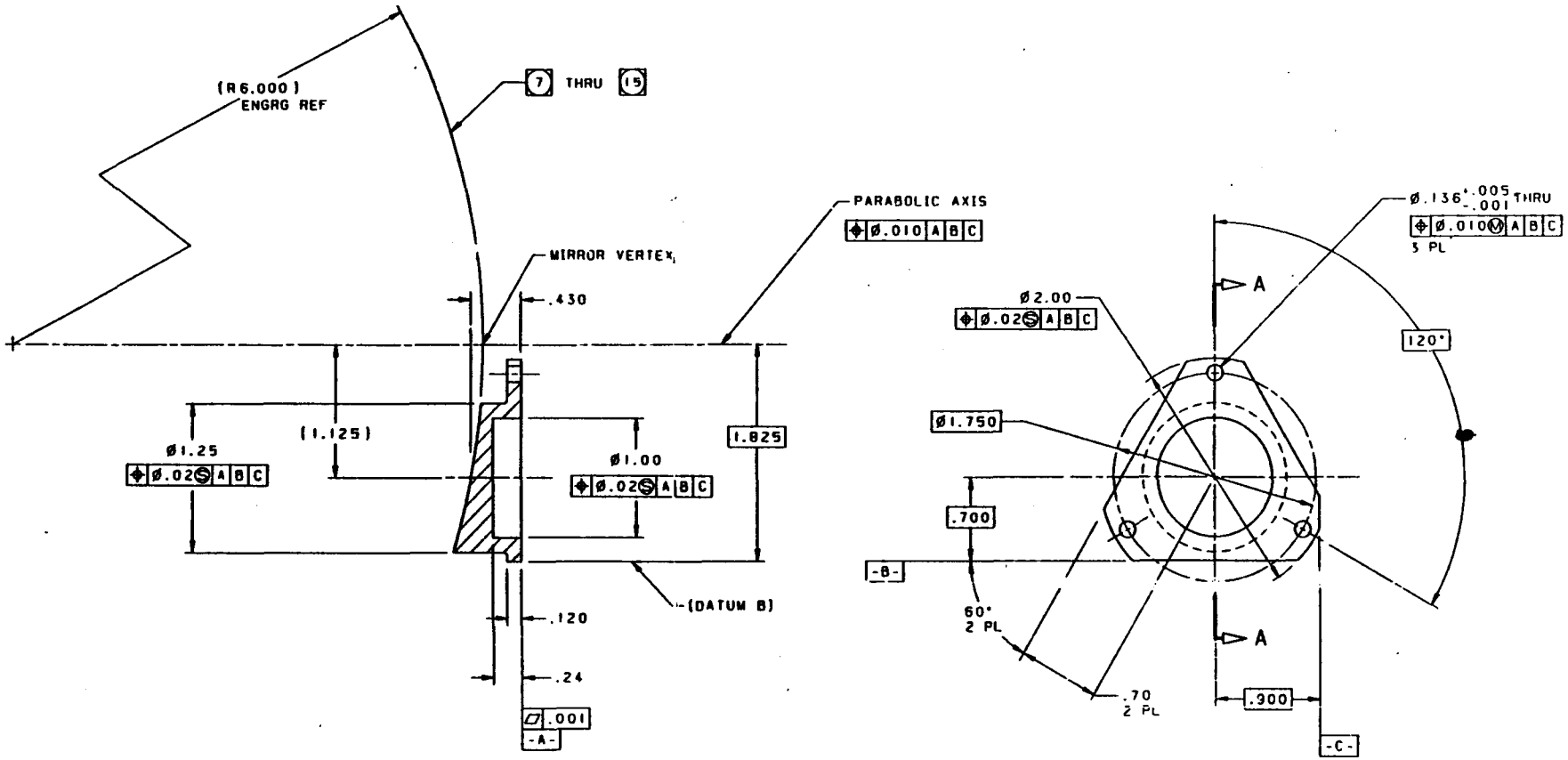

SECTION A-A

11/91
91-0838-214

SPECTRAL SEPARATION IS DONE USING DICHROIC BEAMSPLITTERS AND BANDPASS FILTERS

HUGHES

SANTA BARBARA RESEARCH CENTER
a subsidiary

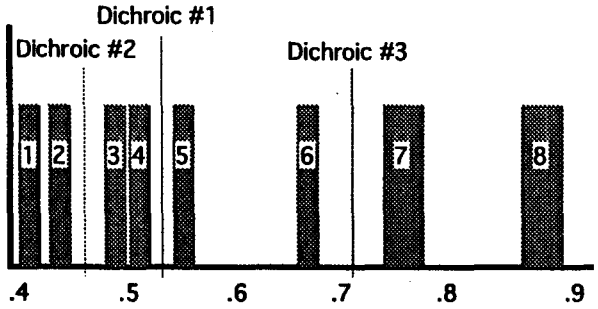

APPROXIMATE BAND LOCATIONS (μm)

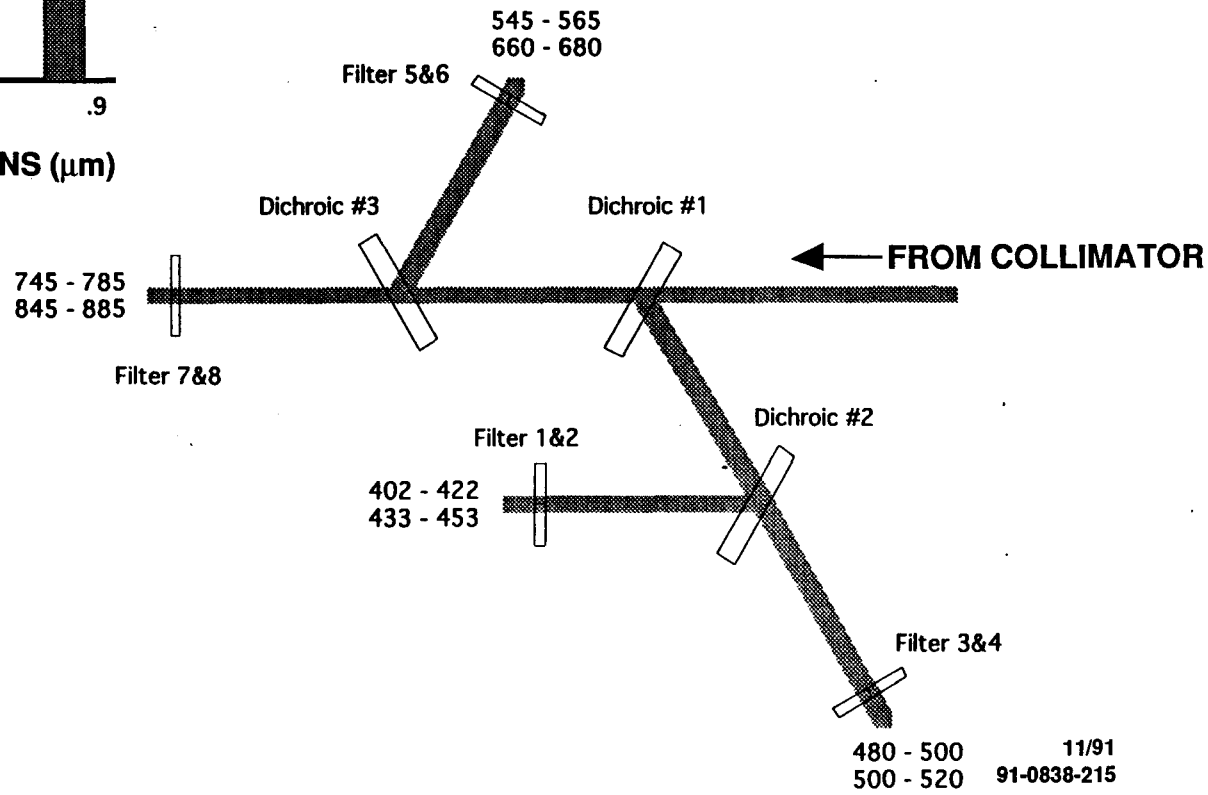

11/91
91-0838-215

DICHROIC BEAMSPLITTER SPECIFICATIONS ARE FINALIZED

HUGHES

SANTA BARBARA RESEARCH CENTER
a subsidiary

DICHROIC BEAMSPLITTER SPECTRAL CHARACTERISTICS

	DICHROIC #1	DICHROIC #2	DICHROIC #3
TRANSMISSION REGION	545-885 NM	480-520 NM	745-885 NM
MINIMUM TRANSMITTANCE	0.85	0.90	0.90
MAXIMUM POLARIZATION	0.04	0.03	0.03
REFLECTION REGION	402-520 NM	402-453 NM	545-680 NM
MINIMUM REFLECTANCE	0.90	0.92	0.90
MAXIMUM POLARIZATION	0.02	0.02	0.02
WAVELENGTH LIMITS	250-1200 NM	250-1200 NM	250-1200 NM

KEY TECHNICAL REQUIREMENTS

- TRANSMITTANCE SPECTRA STABLE TO ±2% OVER FIVE YEARS OF SPACECRAFT ON-ORBIT EXPOSURE
- OPTICAL INPUT: COLLIMATED LIGHT AT 30° ANGLE OF INCIDENCE
- OPERATING TEMPERATURE RANGE: 0° TO 45°C
- OPERATING PRESSURE: 10^{-5}
- TOTAL DOSE ENVIRONMENT: 25 KRAD*

*SPECIFICATION UNDER REVIEW

11/91
91-0838-216

BANDPASS FILTER SPECIFICATIONS ARE FINALIZED

HUGHES

SANTA BARBARA RESEARCH CENTER
a subsidiary

BANDPASS FILTER SPECTRAL CHARACTERISTICS

SPECTRAL BANDPASS										OUT-OF-BAND RESPONSE REGION	
BAND NO.	LOWER BAND EDGE		EDGE RANGE	UPPER BAND EDGE		EDGE RANGE	BAND WIDTH		AVE TRANS	LOWER	UPPER
	nm	nm	nm	nm	nm	nm	nm	nm		µm	µm
1	402	±2	≤10	422	±2	≤10	20	+4.0 −2.0	≥0.80	0.25	1.2
2	433	±2	≤10	453	±2	≤10	20	+4.0 −2.0	≥0.80	0.25	1.2
3	480	±2	≤10	500	±2	≤10	20	+4.0 −2.0	≥0.80	0.25	1.2
4	500	±2	≤10	520	±2	≤10	20	+4.0 −2.0	≥0.80	0.25	1.2
5	545	±2	≤10	565	±2	≤10	20	+4.0 −2.0	≥0.80	0.25	1.2
6	660	±2	≤10	680	±2	≤10	20	+4.0 −2.0	≥0.75	0.25	1.2
7	745	±2	≤20	785	±2	≤20	40	+4.0 −2.0	≥0.70	0.25	1.2
8	845	±2	≤20	885	±2	≤20	40	+4.0 −2.0	≥0.70	0.25	1.2

KEY TECH. REQ.

SPURIOUS SIGNAL RESPONSE < 5%
INTEGRATED PASSBAND RESPONSE
TRANSMITTANCE SPECTRAL STABLE TO ±2% OR ±1 nm
OVER 5 YEARS OF ON-ORBIT EXPOSURE

OPTICAL INPUT: f/2 OPTICAL CONE
0° TO 40°C OPERATING TEMPERATURE RANGE
10^{-5} TORR OPERATING PRESSURE
25 krad TOTAL DOSE RADIATION ENVIRONMENT

11/91
91-0838-217

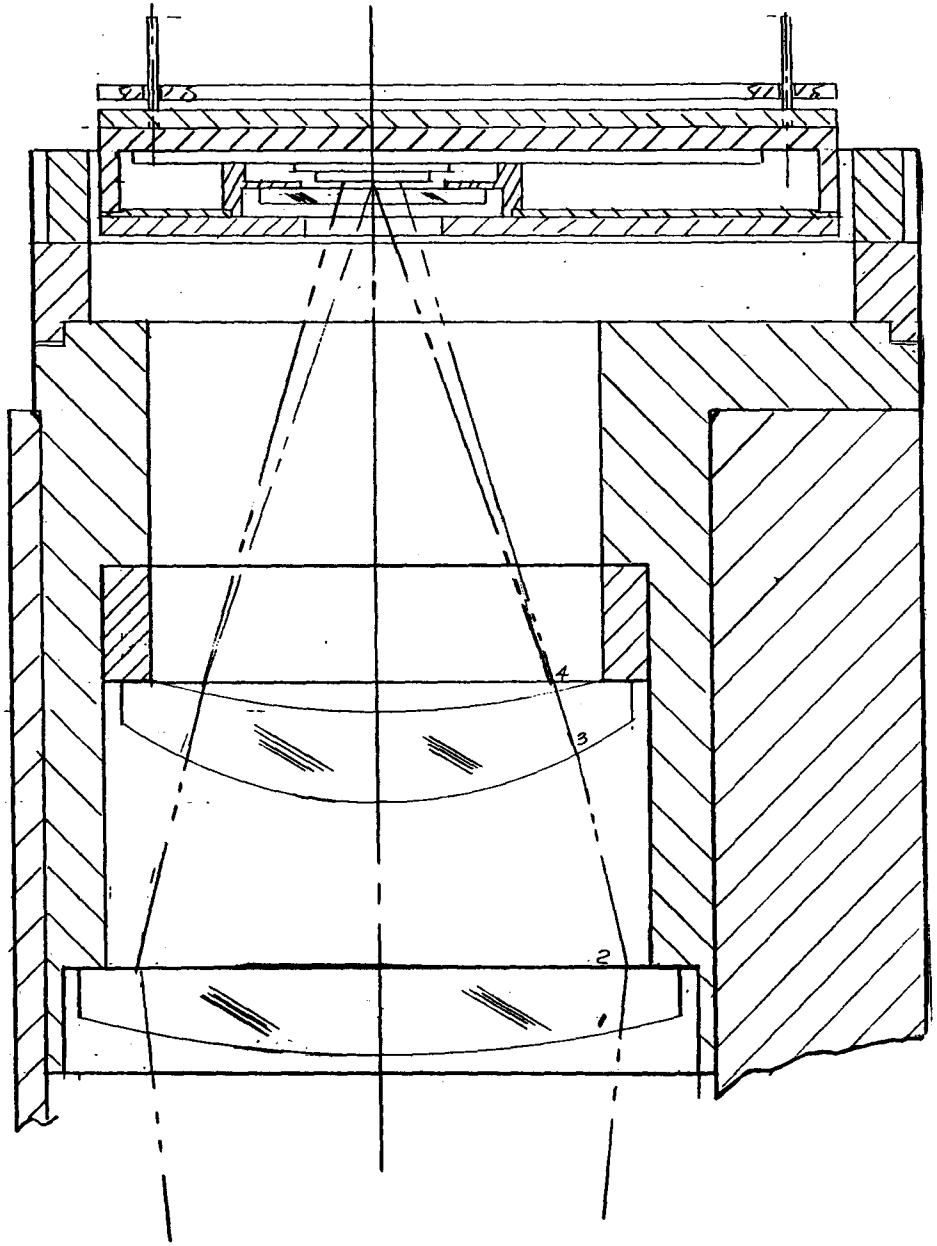

HUGHES

SANTA BARBARA RESEARCH CENTER
a subsidiary

LENS-FPA CONFIGURATION ENABLES FOCAL LENGTH TUNING AND ACCURATE FPA ADJUSTMENT

SeaWiFS™

11/91
91-0838-218

SPACER THICKNESS IS CONTROLLED TO MATCH FOCAL LENGTHS AT DIFFERENT WAVELENGTHS TO ±1%

HUGHES

SANTA BARBARA RESEARCH CENTER
a subsidiary

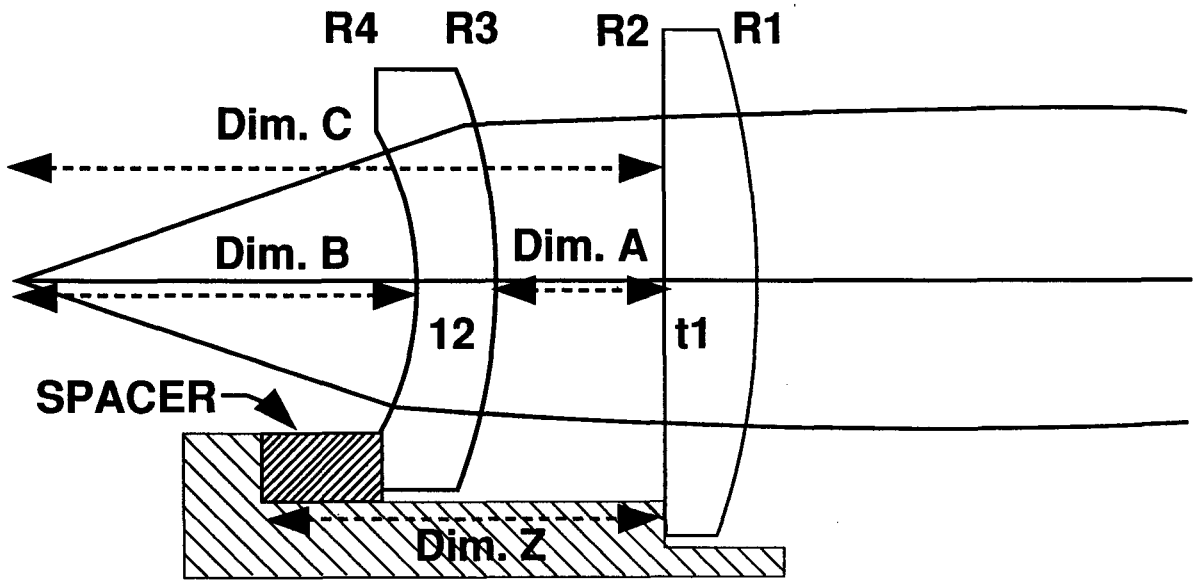

SPECTRAL BAND	1 AND 2	3 AND 4	5 AND 6	7 AND 8
DIM. Z	0.800	0.800	0.800	0.800
NOM FPA DISTANCE	1.640	1.640	1.640	1.640
MIN Δ FPA DISTANCE	0.000	+0.019	+0.038	+0.058
MAX Δ FPA DISTANCE	0.047	+0.068	0.089	+0.109
SPACER LENGTH	0.046 TO 0.050	0.092 TO 0.096	0.133 TO 0.137	0.175 TO 0.179

11/91
91-0838-219

FILTER IS IN CLOSE PROXIMITY TO SILICON DETECTOR. PHYSICAL BOUNDARY BETWEEN BANDS IS OPTICALLY BLACKENED

HUGHES

SANTA BARBARA RESEARCH CENTER
a subsidiary

- TWO VENDORS HAVE SUPPLIED TEST PIECES

SUPPLIER A

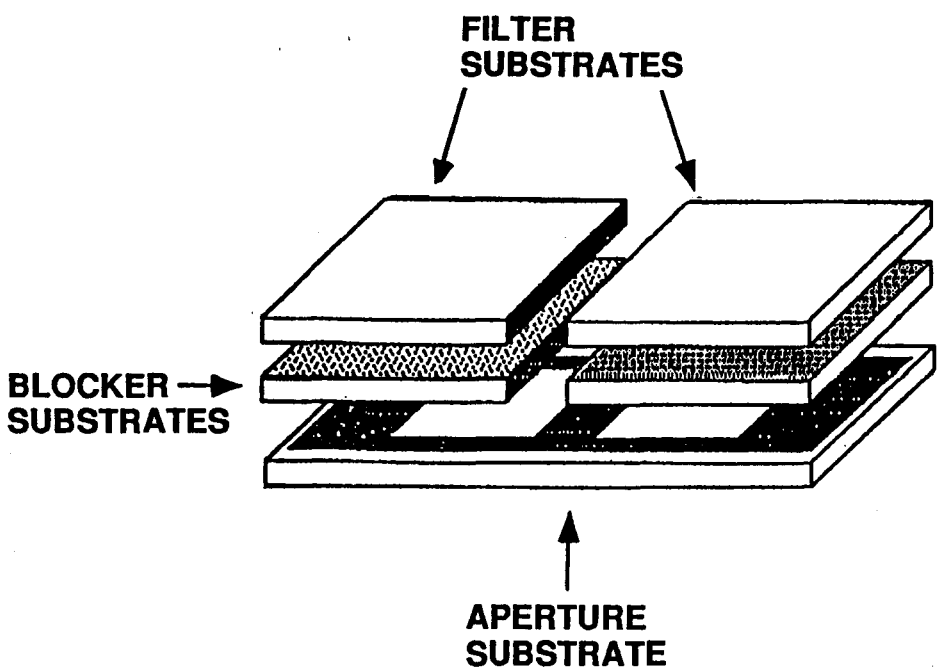

SUPPLIER B

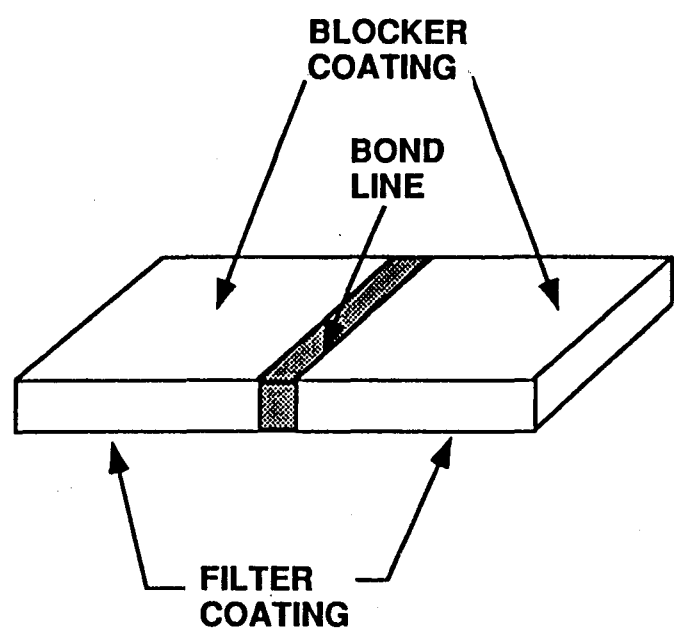

11/91
91-0838-220

OPTICAL ANALYSIS

11/91
91-0838-221

OPTICAL SYSTEM IMAGE QUALITY IS GOOD ACROSS THE DETECTOR ARRAY

HUGHES

SANTA BARBARA RESEARCH CENTER
a subsidiary

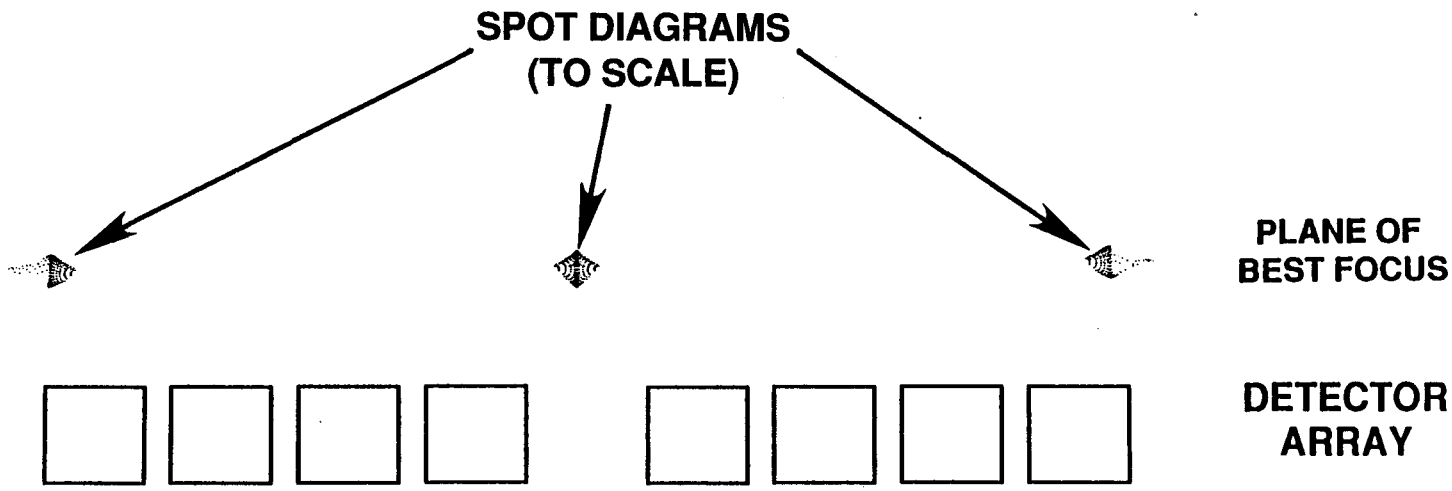

11/91
91-0838-222

SYSTEM POLARIZATION SENSITIVITY MEETS <2% REQUIREMENT

HUGHES

SANTA BARBARA RESEARCH CENTER
a subsidiary

SYSTEM HAS P ≤ ± 0.005 FOR ALL BANDS

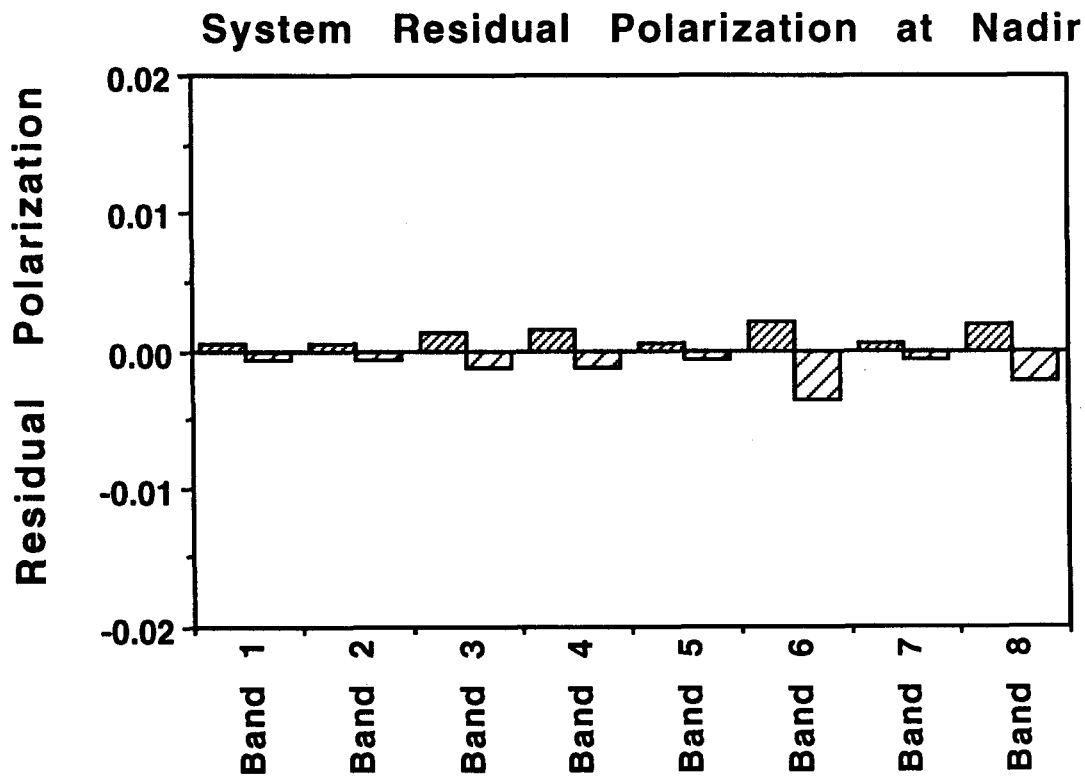

11/91
91-0838-223

POLARIZATION SCRAMBLER PRODUCES TWO GHOST REFLECTIONS WHICH STRADDLE IMAGE AND CONTAIN LESS THAN 2% OF TOTAL ENERGY

HUGHES

SANTA BARBARA RESEARCH CENTER
a subsidiary

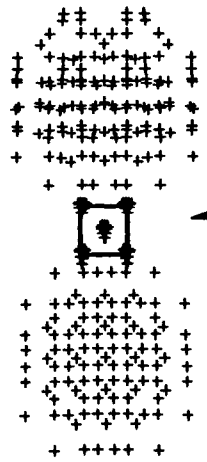

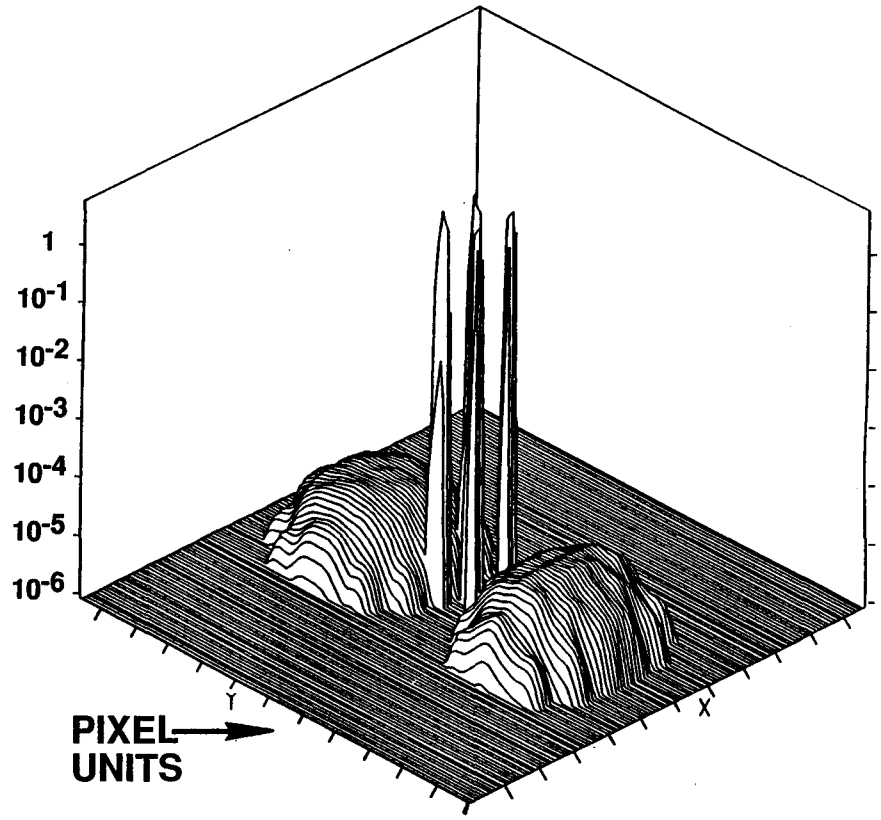

SCAN DIRECTION

TWO VIEWS OF GHOSTS

11/91
91-0838-225

PROOF-OF-CONCEPT TESTING IS BEING PERFORMED AS PART OF A RISK REDUCTION EFFORT

HUGHES

SANTA BARBARA RESEARCH CENTER
a subsidiary

- FPA ALIGNMENT TEST – COMPLETE
- HALF-ANGLE MIRROR MOUNT – COMPLETE
- POLARIZATION SCRAMBLER – COMPLETE
- POLARIZATION SENSITIVITY — COMPLETE
- RADIATION TESTING ON FILTER GLASSES, BK-7, AND SAPPHIRE – COMPLETE
- FILTER EVALUATION – IN PROCESS
- DENTON SILVER REFLECTIVITY — TBD

OPTICAL BENCH TEST PERFORMED TO TEST TELESCOPE POLARIZATION PROPERTIES

HUGHES

SANTA BARBARA RESEARCH CENTER
a subsidiary

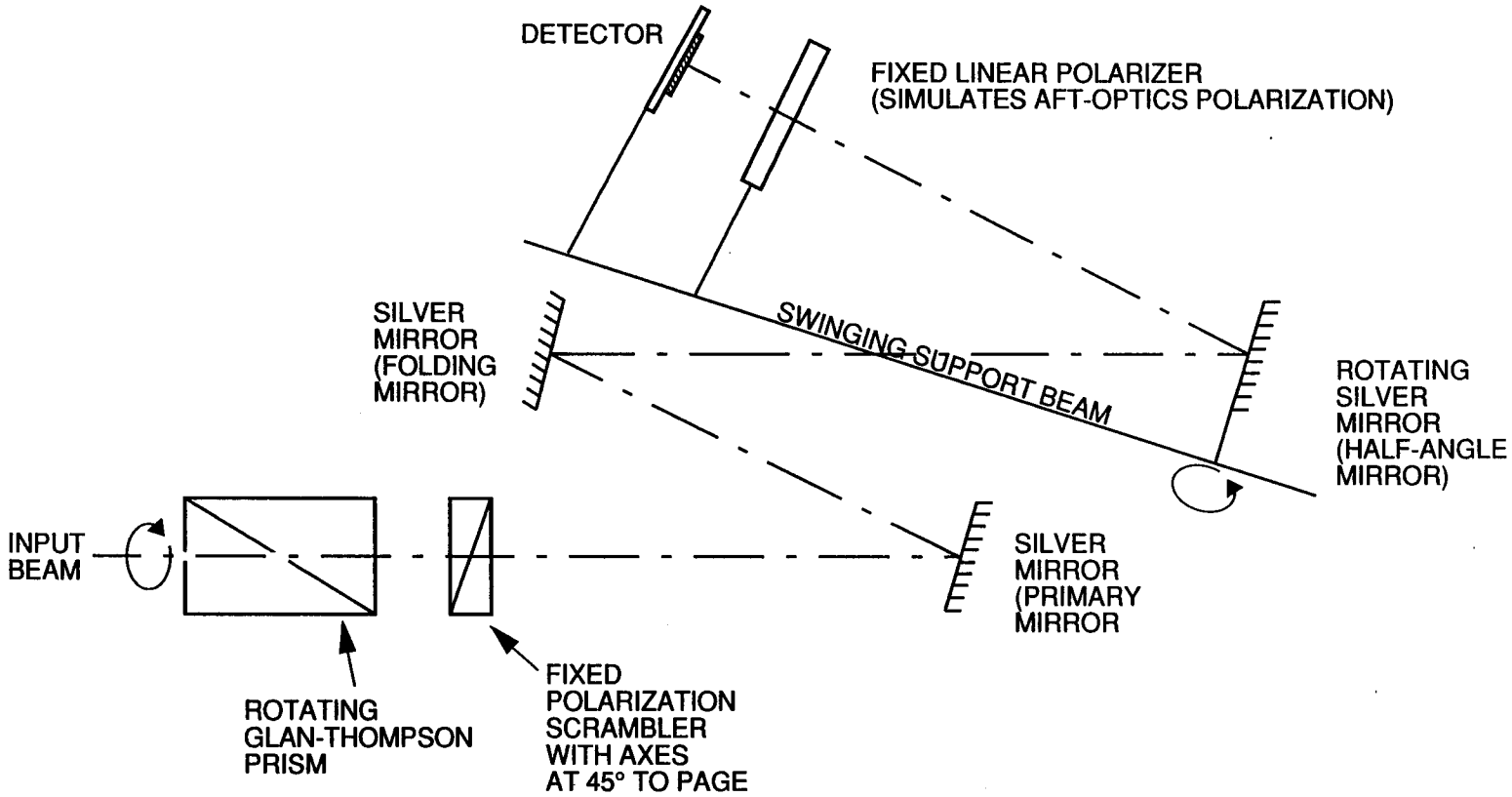

11/91
91-0838-227

TELESCOPE AND POLARIZATION SCRAMBLER PROPERTIES HAVE BEEN TESTED EXPERIMENTALLY WITH GOOD RESULTS

91-10-149

HUGHES

SANTA BARBARA RESEARCH CENTER
a subsidiary

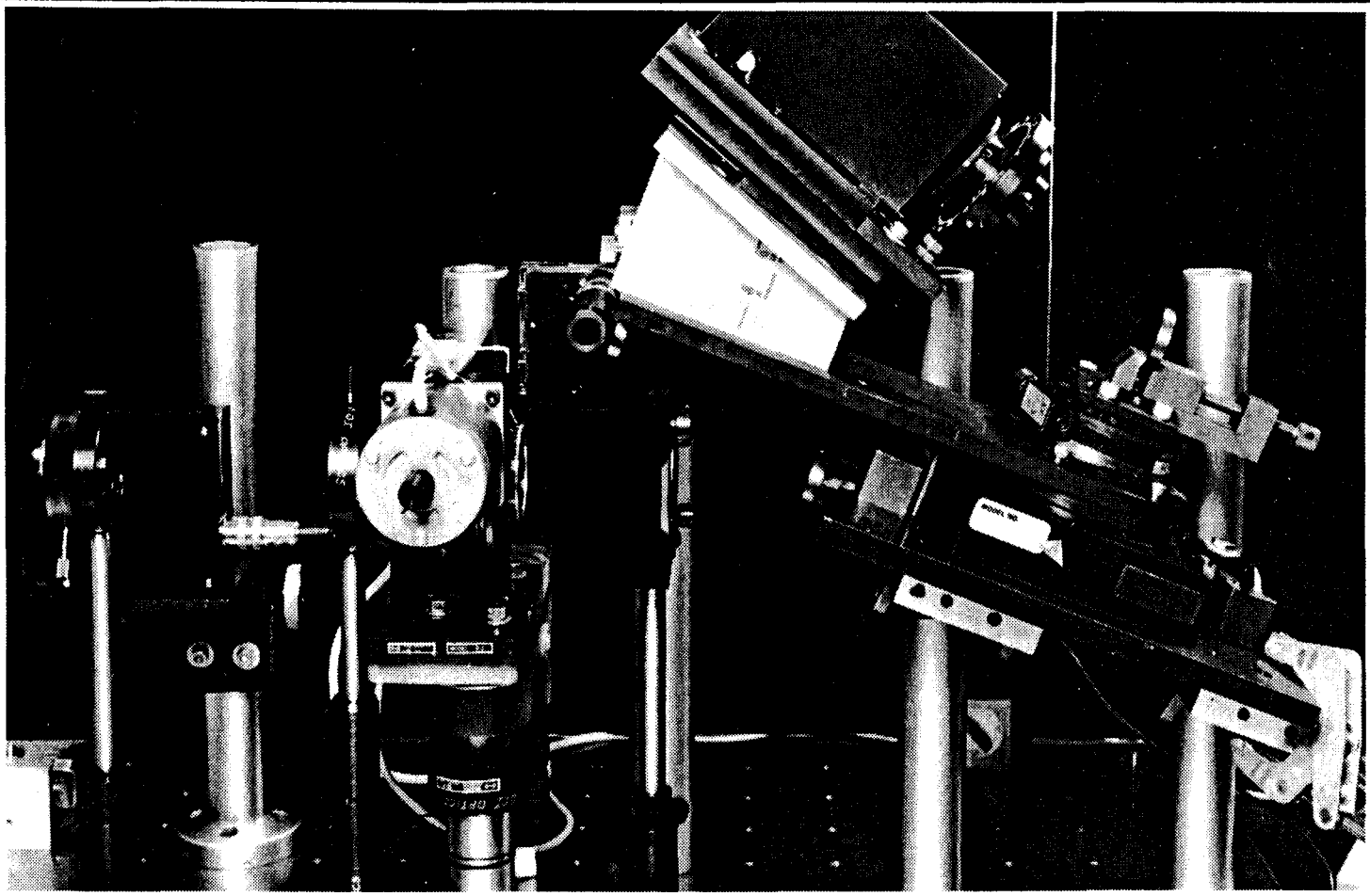

11/91
91-0838-228

OPTICAL ALIGNMENT TECHNIQUE

11/91
91-0838-229

ALIGNMENT SCHEME IS TO ALIGN MAJOR OPTICAL SUBASSEMBLIES TO PRIME FOCUS BAFFLE

HUGHES

SANTA BARBARA RESEARCH CENTER
a subsidiary

- TELESCOPE
  - USING A COLLIMATOR, ALIGN PRIMARY MIRROR, SCRAMBLER, AND HALF-ANGLE MIRROR TO CENTER OF PRIME FOCUS BAFFLE
- AFT OPTICS
  - USING A COLLIMATOR, ADJUST LENS SPACING AND FOCAL POSITION OF DETECTOR ARRAY TO ACHIEVE EFL ±1%, BEST FOCUS, AND FIELD ALIGNMENT FOR EACH SPECTRAL BAND PAIR
- TOTAL INSTRUMENT
  - ADJUST COLLIMATING MIRROR FOR COALIGNMENT OF DETECTOR ARRAYS TO PRIME FOCUS BAFFLE CENTER

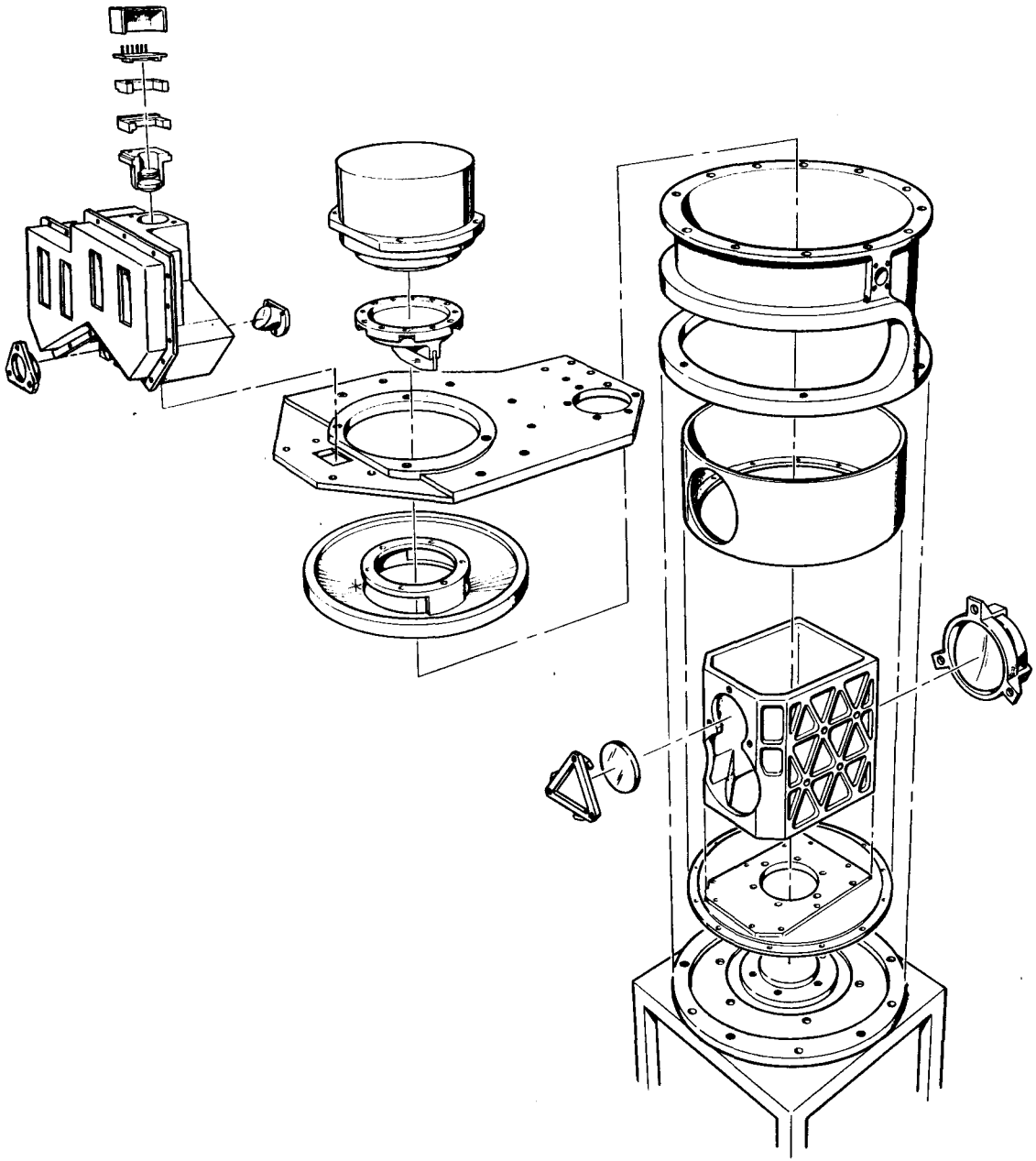

HUGHES

SANTA BARBARA RESEARCH CENTER
a subsidiary

ALIGNMENT/ ASSEMBLY SEQUENCE HAS BEEN CONSIDERED IN MECHANICAL DESIGN

SeaWiFS™

11/91
91-0838-230A

TELESCOPE ALIGNMENT WILL BE REFERENCED TO THE PRIME FOCUS MASK. OTHER TEMPORARY FOCAL POSITIONS WILL BE USED ALSO

HUGHES

SANTA BARBARA RESEARCH CENTER
a subsidiary

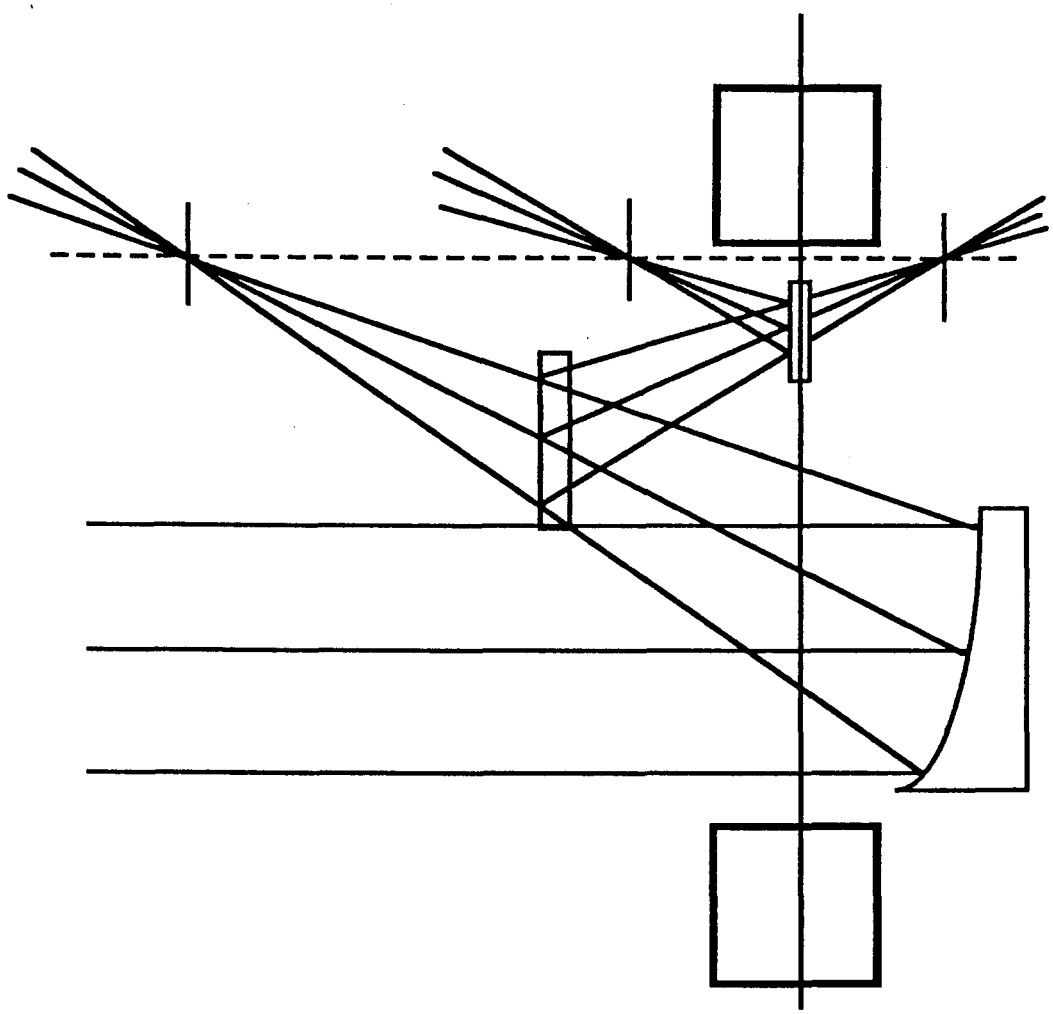

11/91
91-0838-231

DETECTOR ARRAY CAN BE INDEPENDENTLY TRANSLATED IN TWO DIRECTIONS, AND CLOCKED INTO REGISTRATION

HUGHES

SANTA BARBARA RESEARCH CENTER
a subsidiary

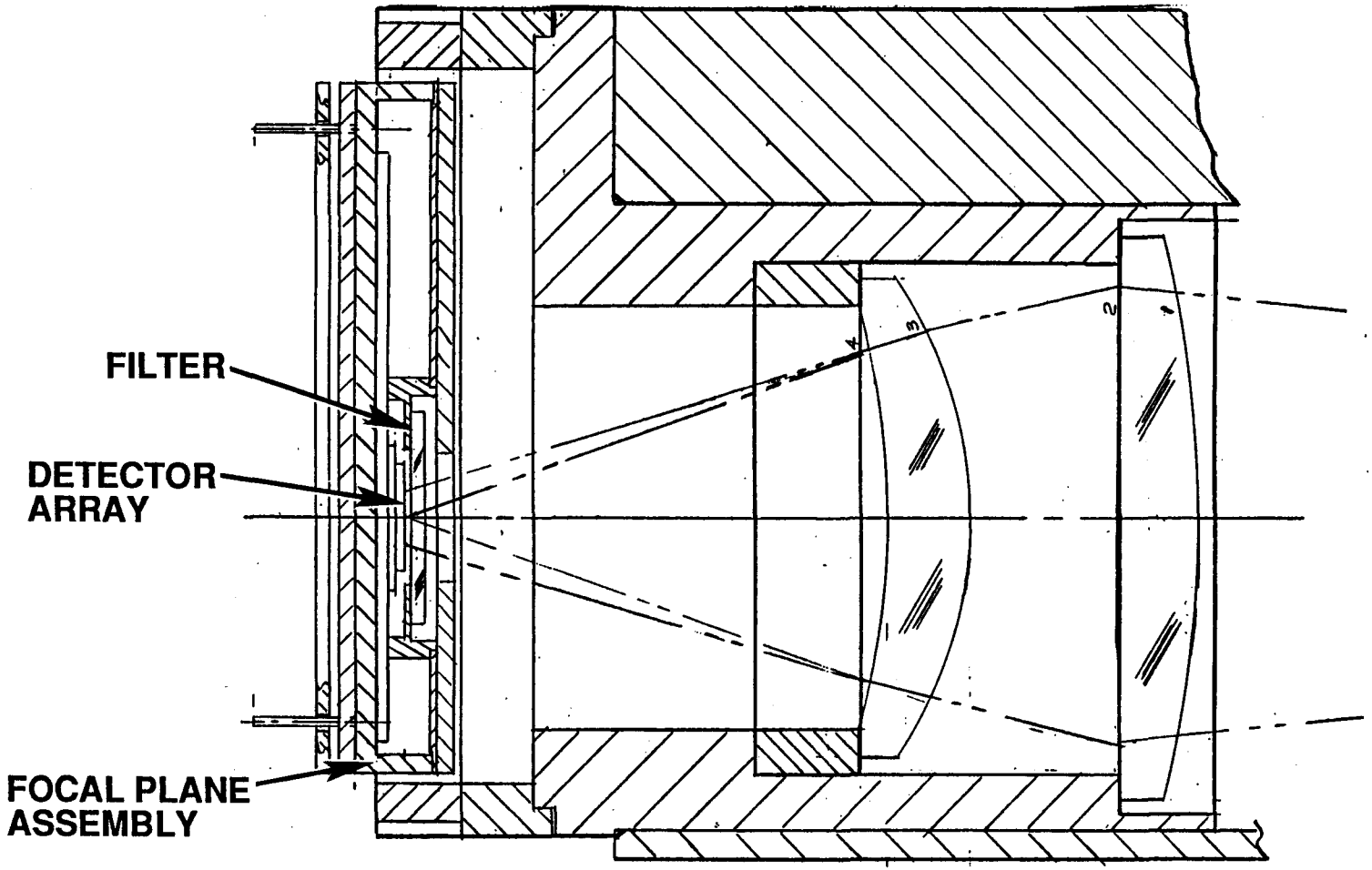

11/91
91-0838-232

SCANNER MECHANICAL DESIGN

BILL FINCHER

11/91
91-0838-300

SCANNER MECHANICAL DESIGN: MAJOR TOPICS

HUGHES

SANTA BARBARA RESEARCH CENTER
a subsidiary

- SCANNER ASSEMBLY
- SIZE AND WEIGHT
- MATERIALS
- SCANNER BASE ASSEMBLY
- SENSOR SHROUD ASSEMBLY
- ROTATING TELESCOPE ASSEMBLY
- MIRROR MOUNTS
- TILT MECHANISM
- COMPENSATOR ASSEMBLY
- AFT OPTICS ASSEMBLY
- SOLAR CALIBRATOR
- SPACECRAFT INTERFACE
- SHIPPING CONTAINER

SCANNER ASSEMBLY

HUGHES

SANTA BARBARA RESEARCH CENTER
a subsidiary

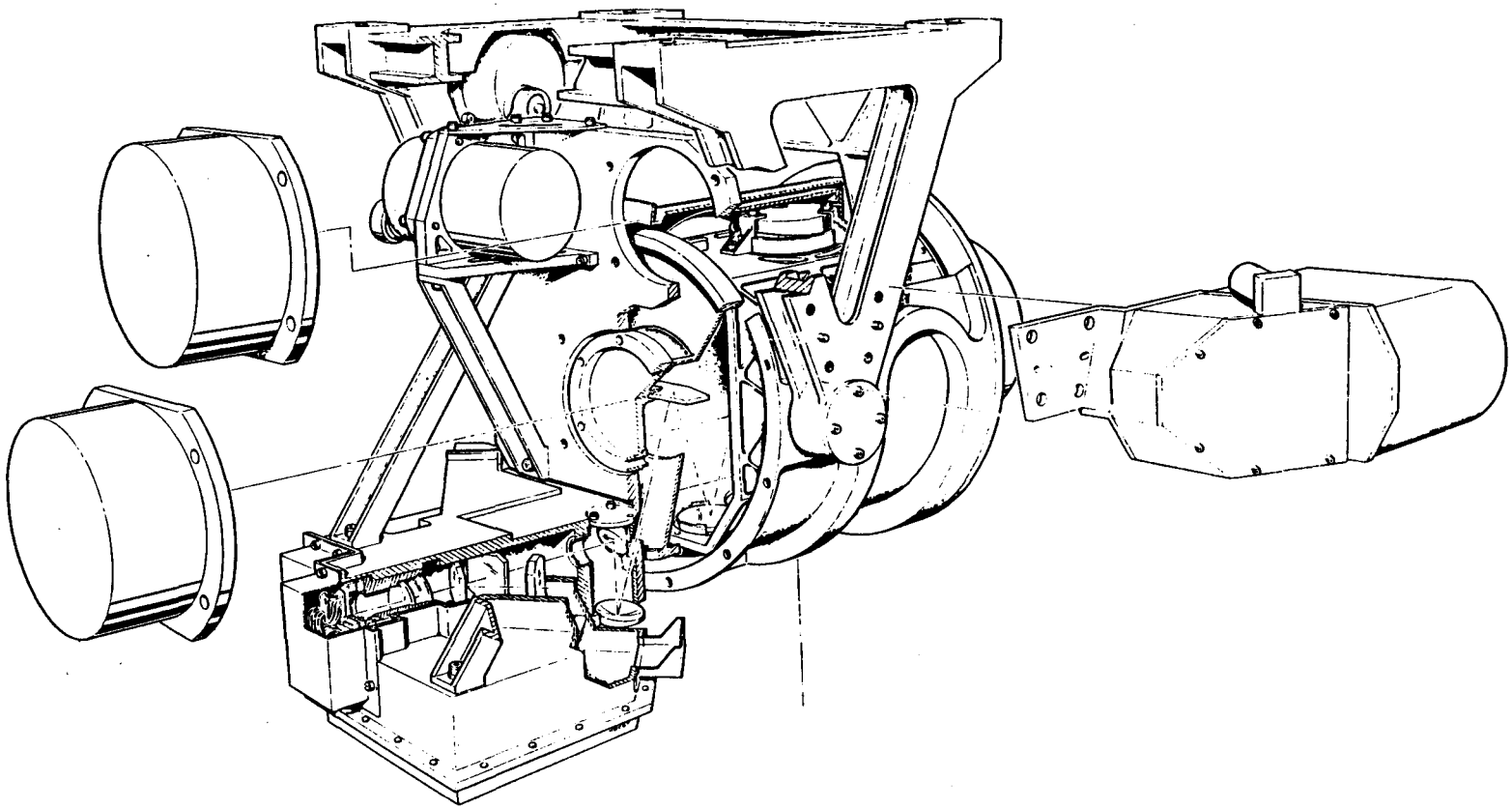

11/91
91-0838-302

SCANNER SIZE AND AXES

HUGHES

SANTA BARBARA RESEARCH CENTER
a subsidiary

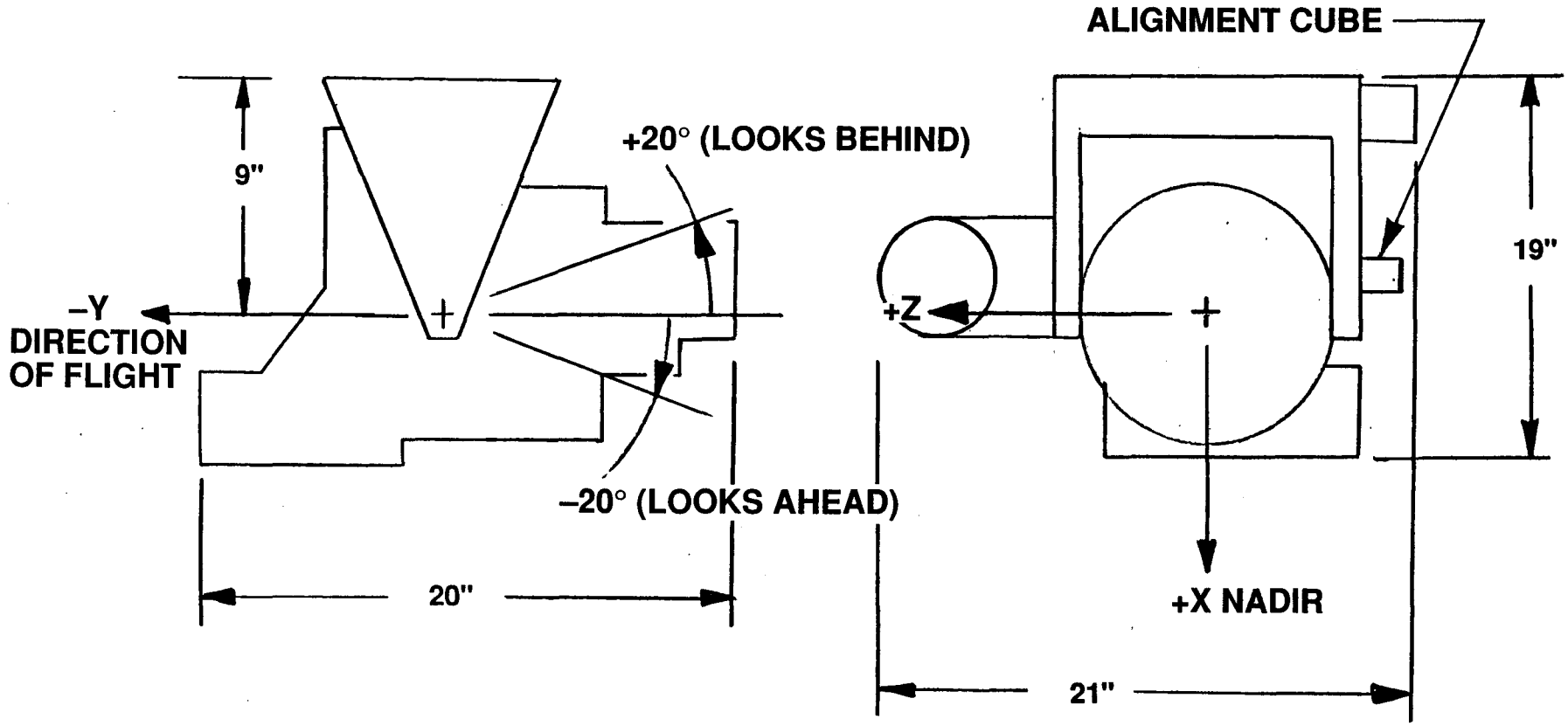

11/91
91-0838-303

SCANNER WEIGHT IS DOMINATED BY MOTORS

HUGHES

SANTA BARBARA RESEARCH CENTER
a subsidiary

ITEM	ESTIMATED WEIGHT (POUNDS)
TELESCOPE ASSEMBLY	6.9
HALF-ANGLE MIRROR ASSEMBLY	5.1
COMPENSATOR ASSEMBLY	4.0
SCANNER BASE ASSEMBLY	3.3
TILT DRIVE ASSEMBLY	5.5
SOLAR CALIBRATOR ASSEMBLY	1.1
HARNESS ASSEMBLY	1.5
SENSOR SHROUD ASSEMBLY	6.9
LENSES, FILTERS	0.9
FOCAL PLANE ASSEMBLIES	0.7
PREAMPLIFIERS	2.0
AFT HOUSING	3.2
THERMAL BLANKETS	1.5
MISCELLANEOUS	2.0
TOTAL	44.6
CONTINGENCY 5%	2.2
TOTAL	46.8*

NOT TO EXCEED WEIGHT: 44 LBS

BY WEIGHT

- 75% ESTIMATED
- 25% CALCULATED
- 0% ACTUAL

ESTIMATED WEIGHT FOR 5 MOTORS:
18 LB (38%)

*TOTAL INCREASED DUE TO A RECENTLY DISCOVERED OMISSION

11/91
91-0838-304

MATERIALS ARE CHOSEN FOR SPACE COMPATIBILITY

HUGHES

SANTA BARBARA RESEARCH CENTER
a subsidiary

- STRUCTURE: ALUMINUM 6061, GLASS EPOXY
- OPTICS: SAPPHIRE, MgF_2, ALUMINUM, FUSED SILICA
- MOTORS: STAINLESS STEEL, ALUMINUM, TITANIUM
- FOCAL PLANE ASSEMBLIES: ALUMINUM, KOVAR, NICKEL-IRON

SCANNER BASE ASSEMBLY USES RIGID LIGHTWEIGHT STRUCTURE

HUGHES

SANTA BARBARA RESEARCH CENTER
a subsidiary

- PARTS ARE PINNED TO EACH OTHER FOR REGISTRATION
- ASSEMBLY PINNED TO SPACECRAFT

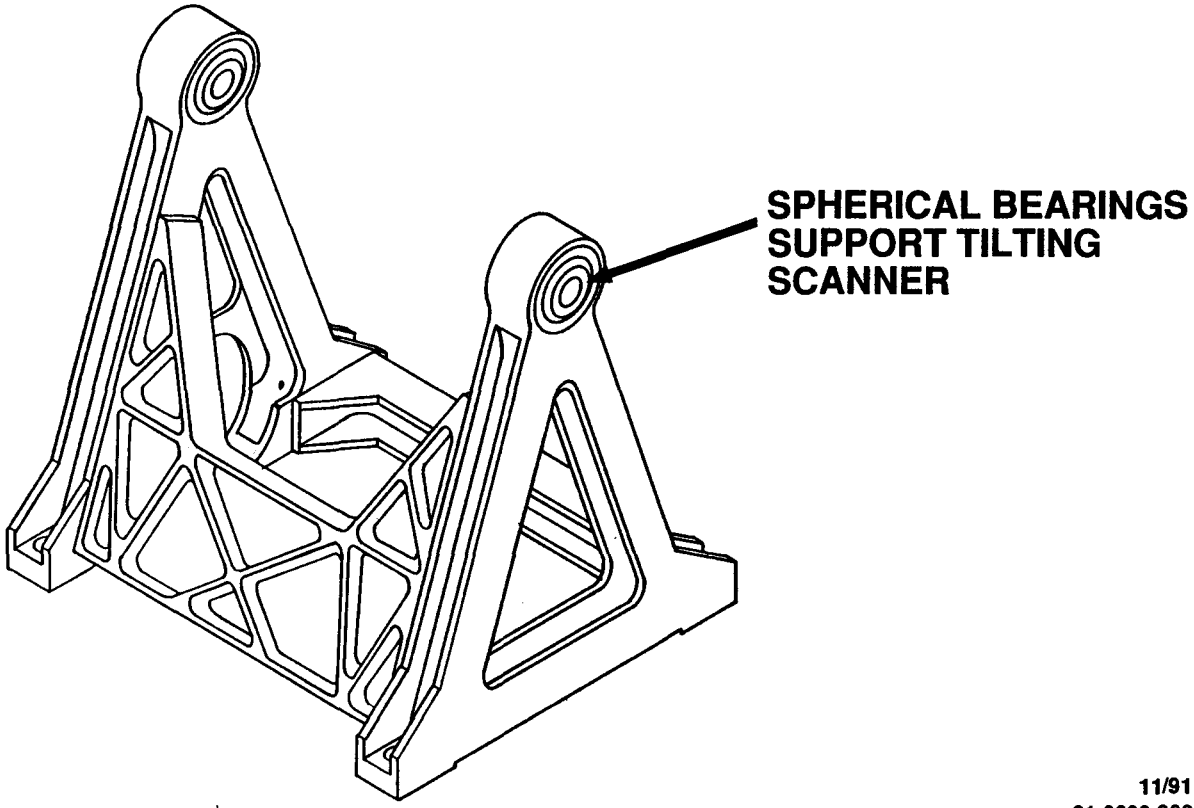

11/91
91-0838-306

SPHERICAL BEARINGS ARE STANDARD AEROSPACE HARDWARE

HUGHES

SANTA BARBARA RESEARCH CENTER
a subsidiary

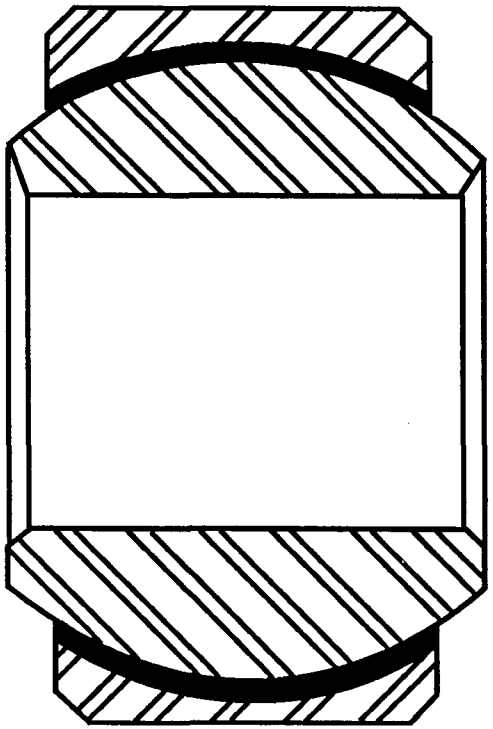

CROSS SECTION OF
MS 14102 BEARING

- STAINLESS STEEL BALL AND OUTER RING
- TEFLON IMPREGNATED PHENOLIC LINER
- STATIC RADIAL LOAD LIMIT FOR 0.62-inch DIAMETER = 29,000 POUNDS
- OSCILLATING LOAD LIMIT = 20,250 POUNDS
- BREAKAWAY TORQUE 0-1 inch POUND
- VENDOR TEST DATA SHOWS APPROXIMATELY 0.001 inch WEAR AFTER 4 x 10^6 CYCLES WITH 2,300 POUND LOAD

11/91
91-0838-312A

- PARTS HAVE REGISTRATION SURFACES AND PINS

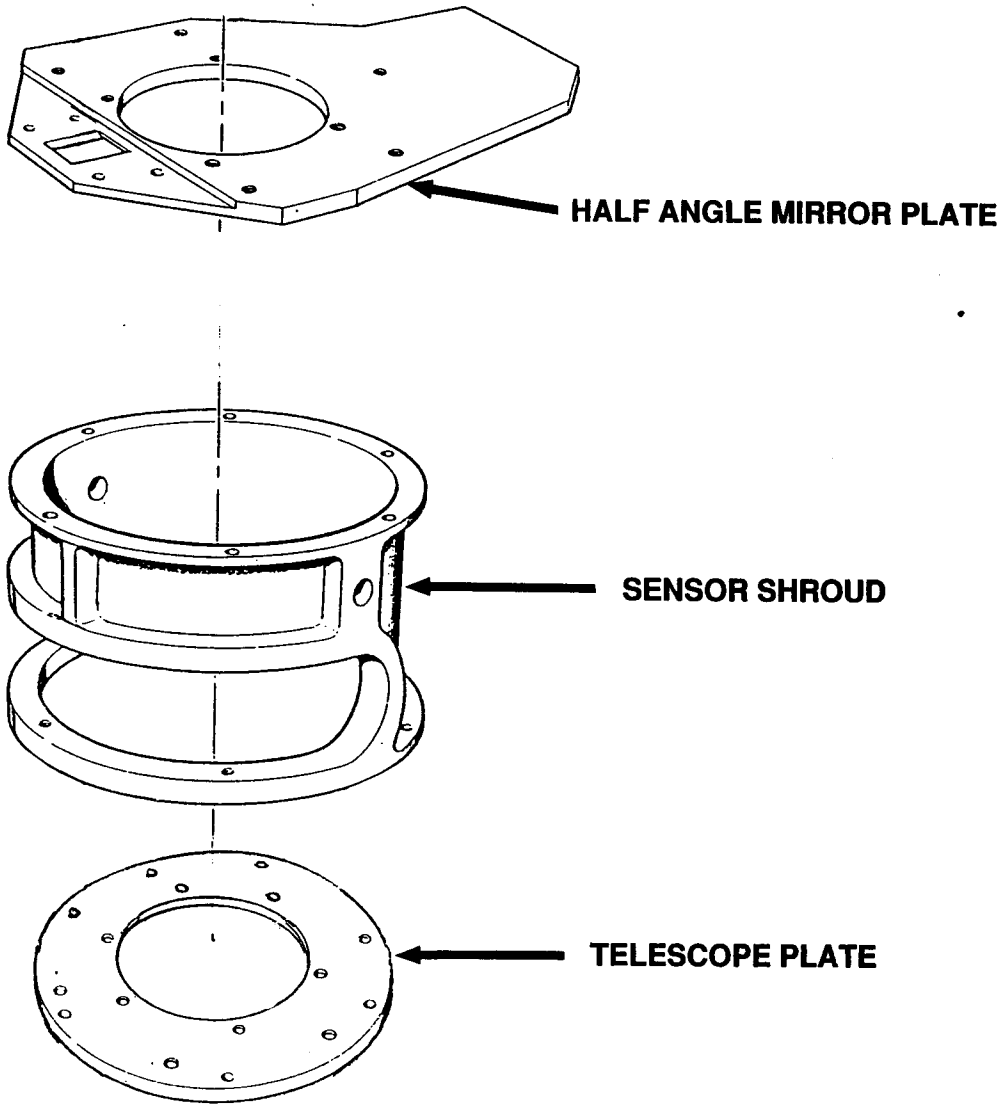

HUGHES

SANTA BARBARA RESEARCH CENTER
a subsidiary

SENSOR SHROUD ASSEMBLY PROVIDES STRUCTURAL SUPPORT

SeaWiFS™

11/91
91-0838-307

TELESCOPE MOTOR SPECIFICATIONS ARE CHOSEN TO MINIMIZE POWER AND TORQUE RIPPLE

HUGHES

SANTA BARBARA RESEARCH CENTER
a subsidiary

- FIVE YEAR LIFE — 1 BILLION REVOLUTIONS AT 360 RPM
- BRUSHLESS DC MOTOR
- OPTICAL ENCODER
- REDUNDANT WINDINGS, REDUNDANT READOUTS
- TORQUE CONSTANT FOR EACH WINDING: 39.6 IN-OZ/AMP ± 10%
- RUNNING TORQUE LESS THAN 4 IN-OZ AVERAGE AT 360 RPM
- TORQUE VARIATION LESS THAN ±2 IN-OZ FROM AVERAGE
- OPERATING VOLTAGE 21 VDC
- LEVEL S MIL-SPEC ELECTRONIC PARTS
- POWER: 2.1 WATTS NOMINAL
- LUBRICANT: PENNZANE

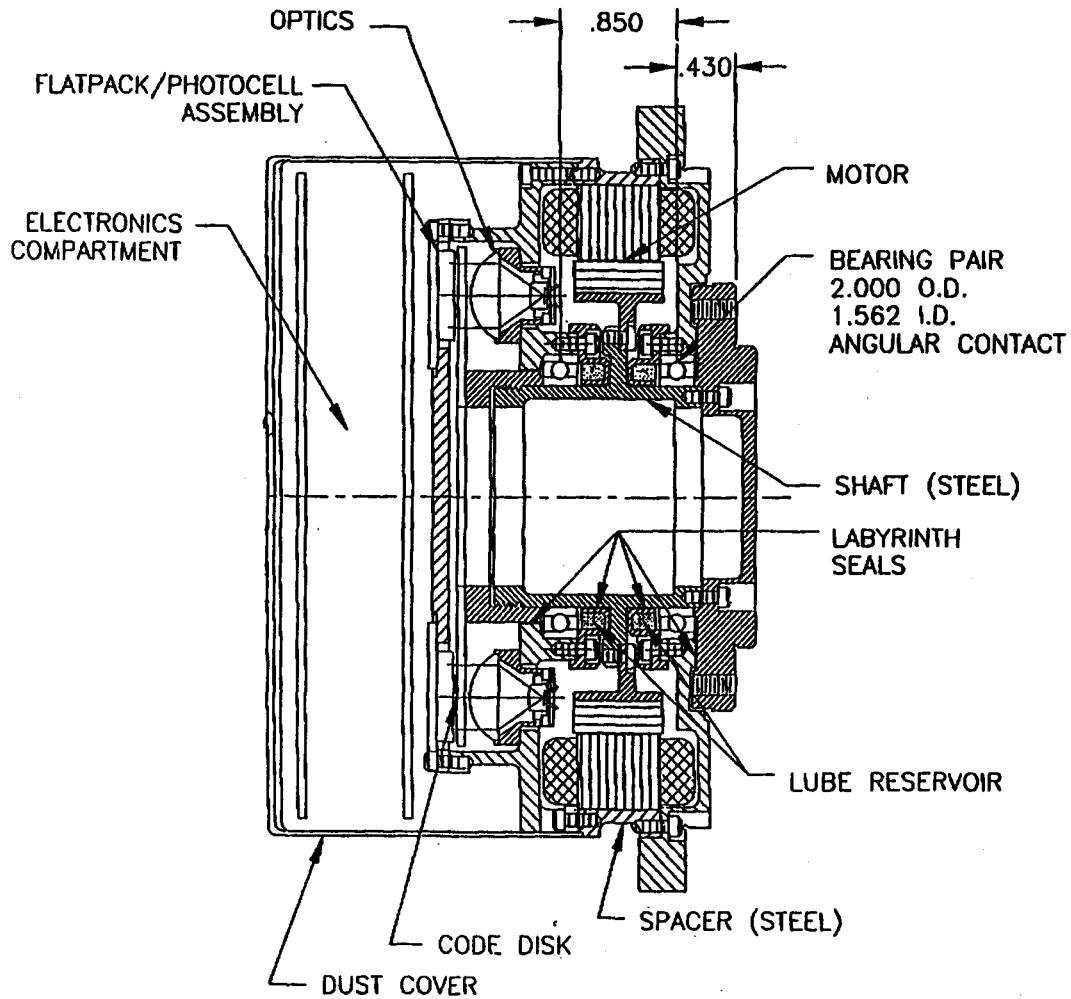

HUGHES

SANTA BARBARA RESEARCH CENTER
a subsidiary

TELESCOPE MOTOR ENCODER ASSEMBLY DESIGN BEING IMPLEMENTED BY BEI

SeaWiFS™

11/91
91-0838-309

ROTATING TELESCOPE ASSEMBLY DESIGN MINIMIZES MASS AND INERTIA

HUGHES

SANTA BARBARA RESEARCH CENTER
a subsidiary

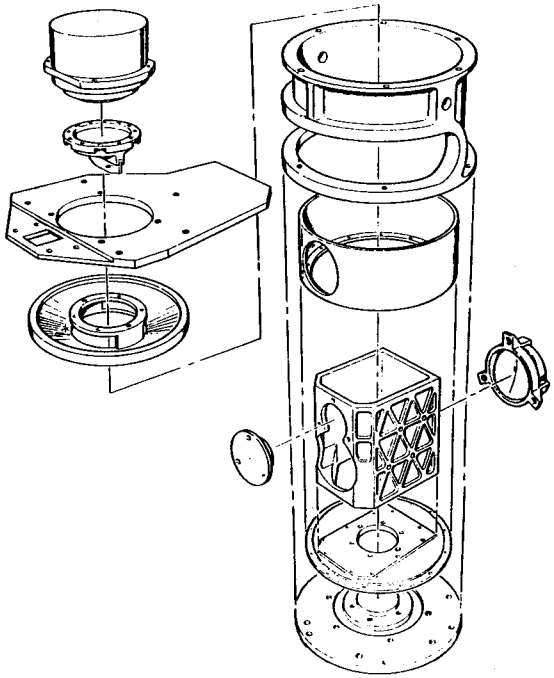

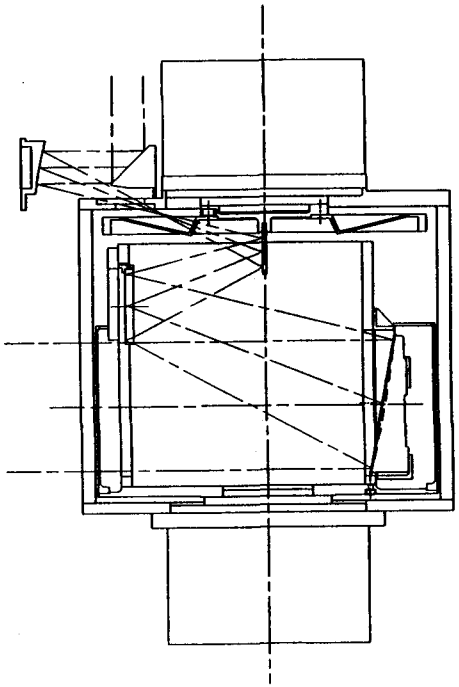

CALCULATED WEIGHT AND INERTIA:

TELESCOPE	2.7 LB, 1.3 OZ-IN.-s^2
HALF ANGLE MIRROR	0.5 LB, 0.2 OZ-IN.-s^2

11/91
91-0838-310

PRIMARY MIRROR, POLARIZATION SCRAMBLER, AND HALF-ANGLE MIRROR MOUNTING

HUGHES

SANTA BARBARA RESEARCH CENTER
a subsidiary

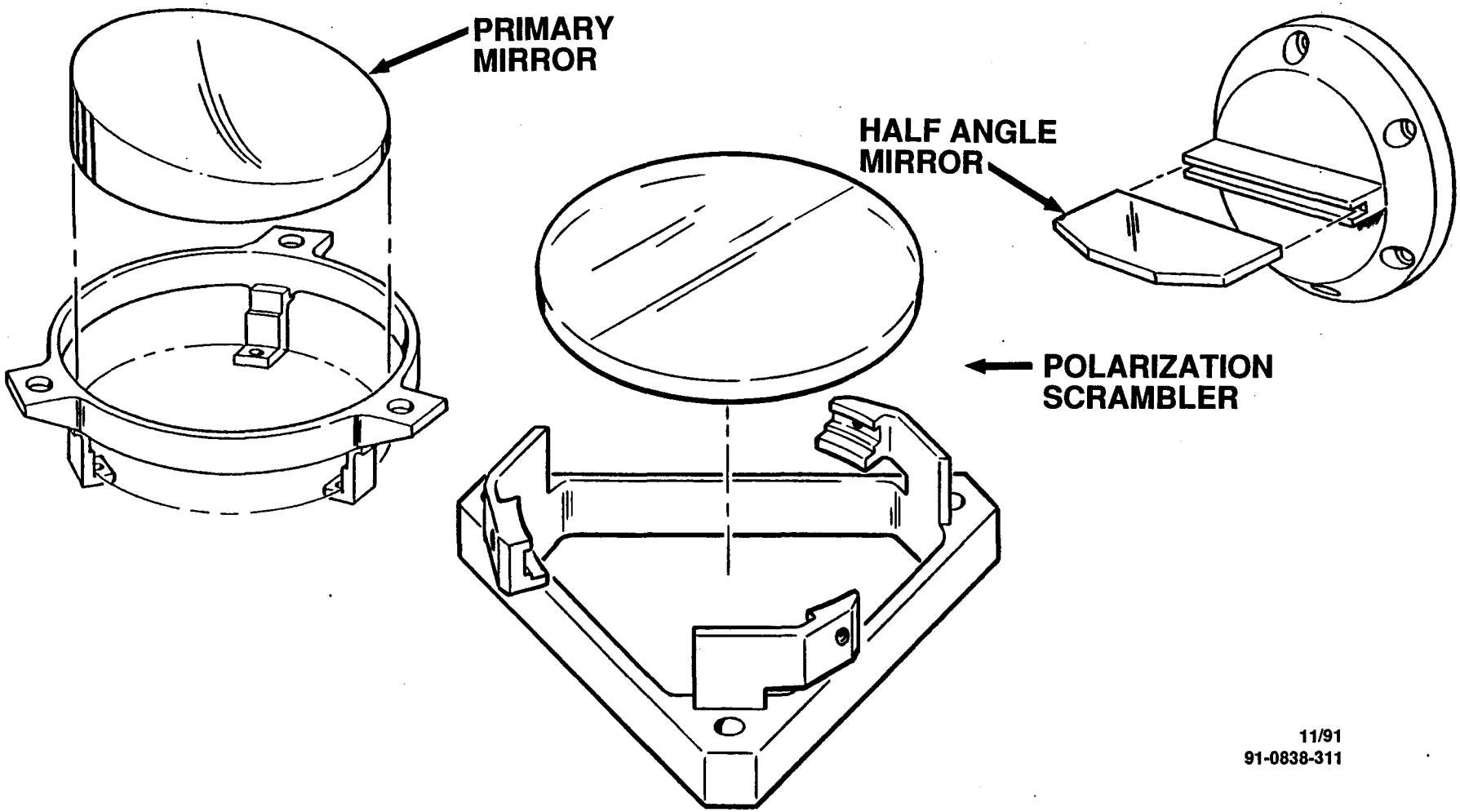

11/91
91-0838-311

TILT MOTOR SPECIFICATIONS

HUGHES

SANTA BARBARA RESEARCH CENTER
a subsidiary

- FIVE YEAR LIFE — 53,000 CYCLES (2 CYCLES PER ORBIT)
- PERMANENT MAGNET STEPPER MOTOR WITH GEARBOX AND RESOLVER
- NO REDUNDANT WINDINGS
- SPEED: 15° PER SECOND
- TORQUE: 100 IN-LB
- NO BACKLASH
- TORSIONAL STIFFNESS: 6000 IN-LB/RAD MINIMUM
- RADIAL STIFFNESS: 120,000 LB/IN MINIMUM
- VOLTAGE 28 VDC
- ACCURACY/REPEATABILITY OF THE RESOLVER: 6 MINUTES OF OUTPUT SHAFT ROTATION

TILT MECHANISM CONFIGURATION PRODUCES MAXIMUM STIFFNESS IN THREE POSITIONS

HUGHES

SANTA BARBARA RESEARCH CENTER
a subsidiary

2 STEPPER MOTORS WITH GEARBOXES AND RESOLVERS MOVE TO TOP DEAD CENTER AND BOTTOM DEAD CENTER POSITIONS

1 MOTOR ON SCANNER BASE, 1 ON HALF ANGLE MIRROR PLATE

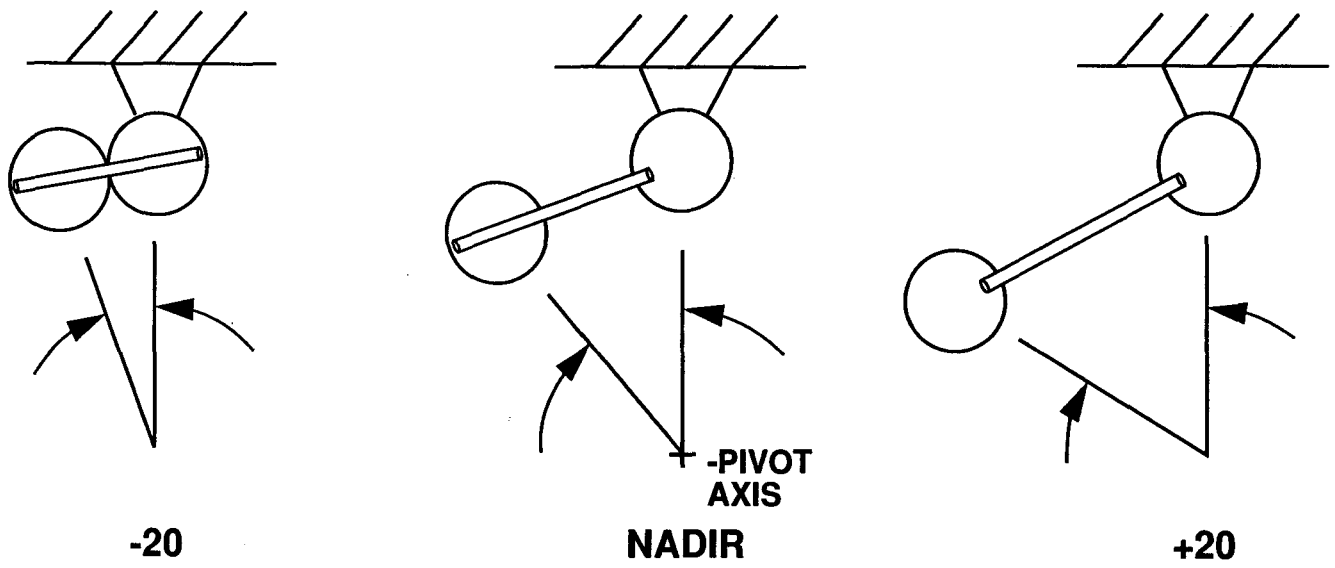

11/91
91-0838-312

TILT MECHANISM ALONG TRACK REPEATABILITY

HUGHES

SANTA BARBARA RESEARCH CENTER
a subsidiary

- TILT REPEATABILITY REQUIREMENT = 80 μrad
- MECHANISM GEOMETRY ALLOWS COARSE MOTOR OUTPUT ANGLE (INPUT MOTOR ANGLE TO OUTPUT TILT ANGLE IS 500:1)
- MINIMUM ERRORS FROM MOTORS, BEARINGS, CABLE STRAIN DUE TO VERY STIFF DESIGN AND VERY LOW LOADS
- THERMAL GRADIENT CONTRIBUTES SIGNIFICANTLY TO ERROR FOR 5°C VARIATION FROM CALIBRATION TEMPERATURE GRADIENT CONDITIONS

POSITION	POSITION CHANGE
+20°	24 μrad
NADIR	25 μrad
-20°	75 μrad

MOMENTUM COMPENSATOR: SPECIFICATIONS

HUGHES

SANTA BARBARA RESEARCH CENTER
a subsidiary

- FIVE YEAR LIFE — 4 BILLION REVOLUTIONS AT 24 RPS
- ANGULAR MOMENTUM OF 53 OZ-IN-SEC ± 10% (BY TRIMMING)
- POWER: 4 WATTS MAX
- MOTOR SHALL NOT HAVE BRUSHES
- OPERATING VOLTAGE 21 VDC
- MAXIMUM SIZE: 5 INCH DIAMETER BY 3 INCH HIGH
- SPECIFIED WEIGHT IS 2.5 POUNDS

AFT OPTICS ASSEMBLY

HUGHES

SANTA BARBARA RESEARCH CENTER
a subsidiary

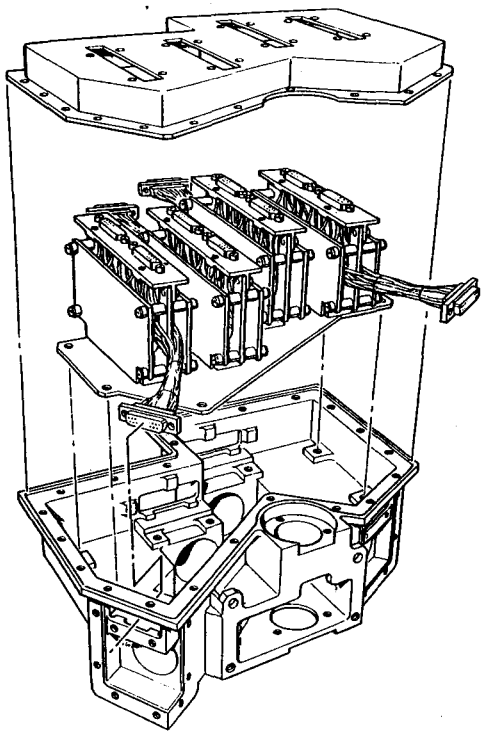

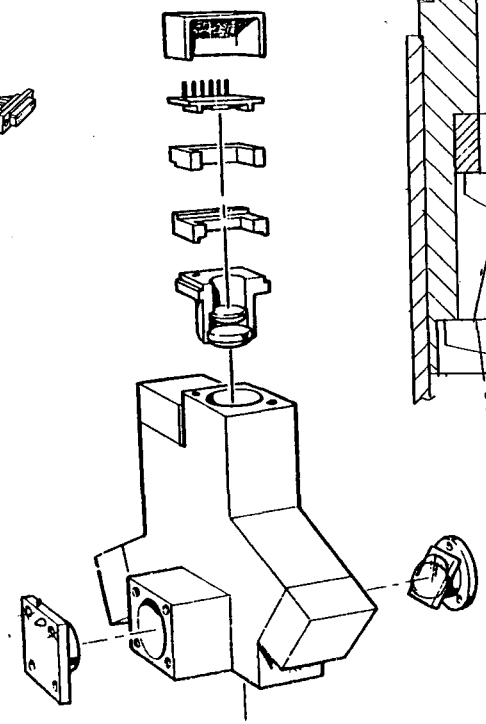

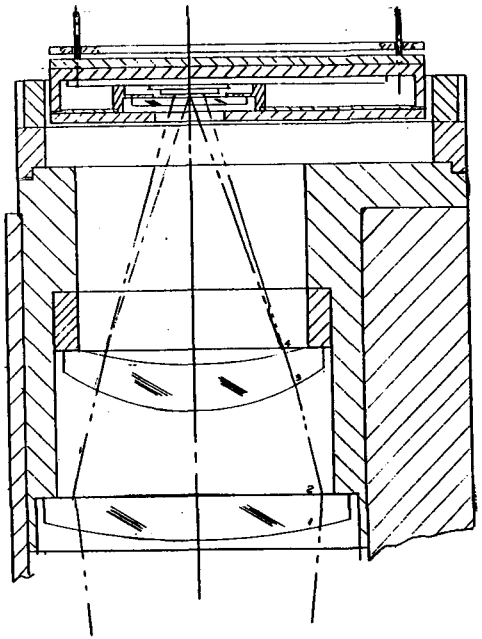

11/91
91-0838-315

SOLAR CALIBRATOR ASSEMBLY USES A DOOR TO PROTECT DIFFUSER DURING ORBIT INSERTION

HUGHES

SANTA BARBARA RESEARCH CENTER
a subsidiary

ATTACHED TO
BASE ASSEMBLY

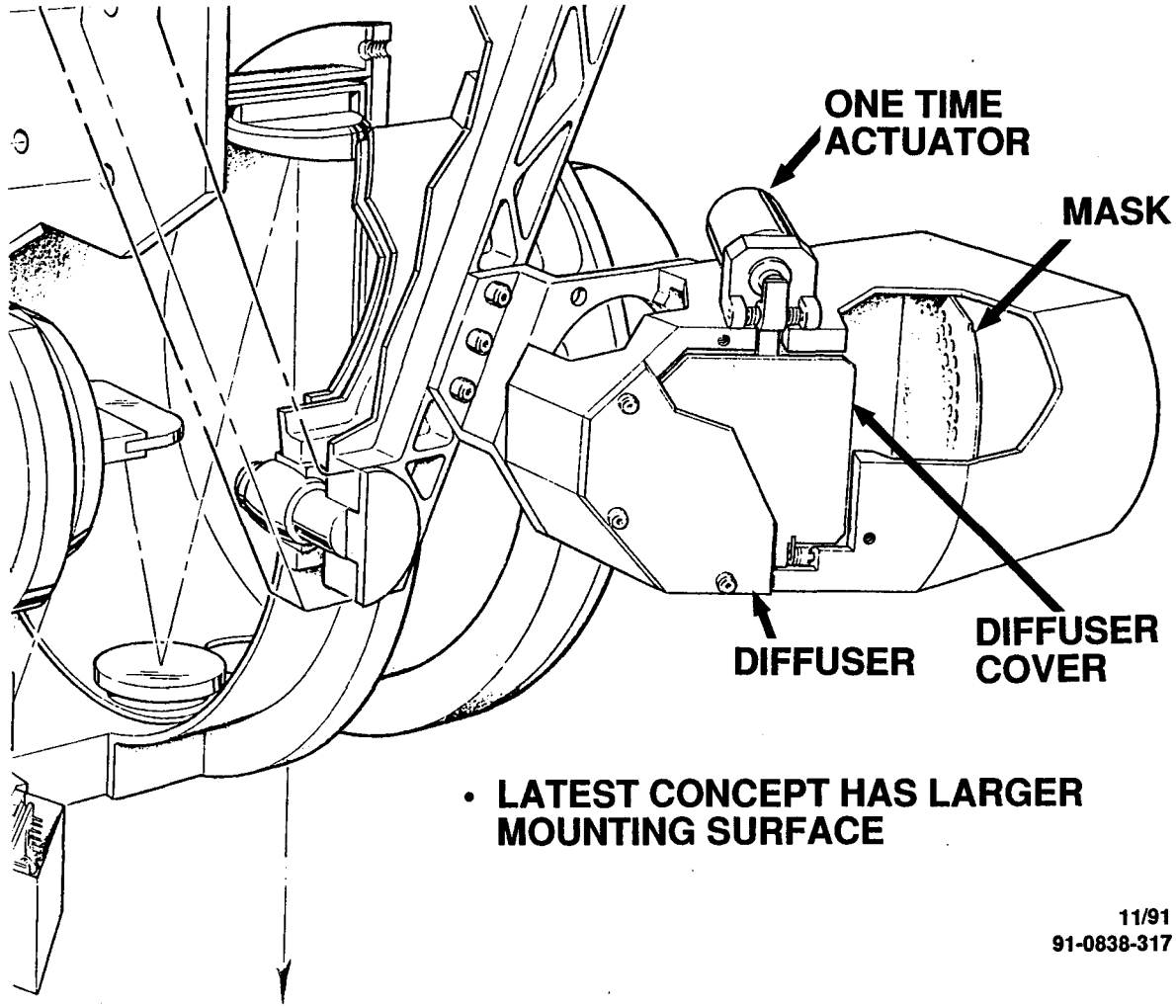

- LATEST CONCEPT HAS LARGER MOUNTING SURFACE

11/91
91-0838-317

SOLAR CALIBRATOR EMPLOYS YB71 DIFFUSER AND APERTURE PLATE ATTENUATOR

HUGHES

SANTA BARBARA RESEARCH CENTER
a subsidiary

- DIFFUSER
  - YB71 COATING
  - CONTAMINATION COVER RELEASED AFTER ORBIT INSERTION
  - IN FULL VIEW AT +20° ONLY
- ATTENUATOR
  - BLACK ANODIZED 0.010 IN. ALUMINUM PLATE WITH 0.017 IN. DIAMETER HOLES ON 0.025 IN. CENTERS
  - OFFSET 30° FROM INCIDENT SUN ANGLE
- ACTUATOR
  - SOLENOID USED FOR ONE TIME ACTUATION
  - DOOR COATED WITH YB71 IN CASE OF ACTUATOR FAILURE

SPACECRAFT INTERFACE

HUGHES

SANTA BARBARA RESEARCH CENTER
a subsidiary

SCANNER BOLT PATTERN

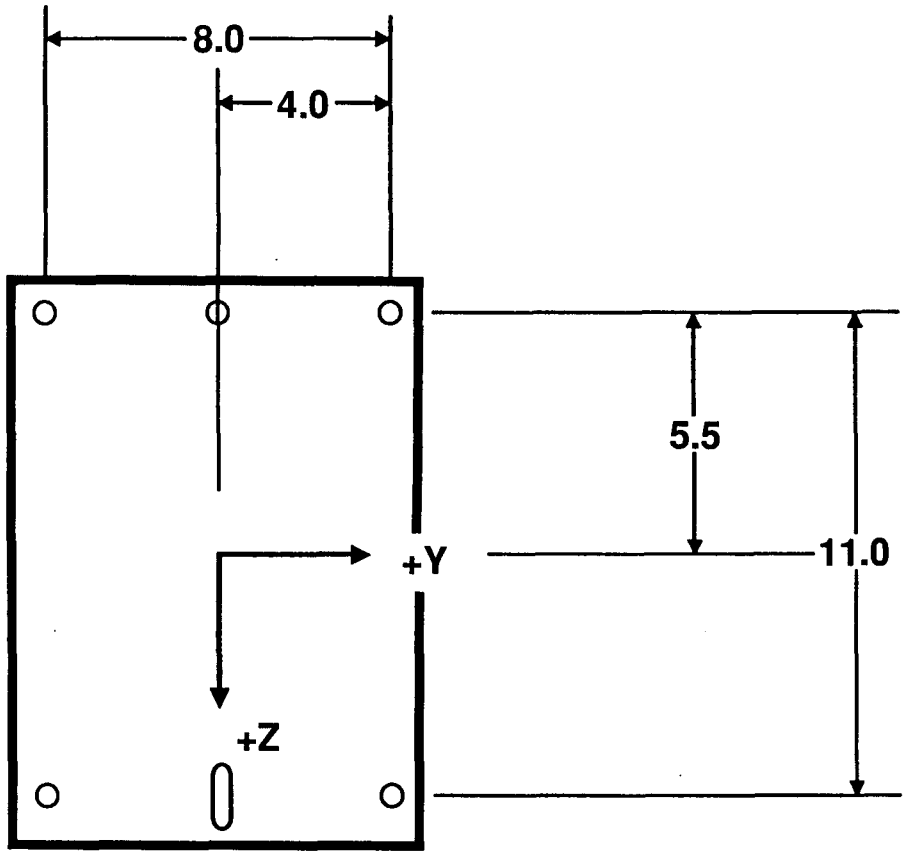

- 4 1/4–20 BOLTS, 2 PINS
  BOLTS SUPPLIED BY SBRC
  PINS SUPPLIED BY OSC
- SCANNER FEET FLAT TO 0.001 IN.
  SCANNER FEET COPLANAR TO 0.010 IN.
  SHIM GAPS TO 0.001 IN.
  SHIMS SUPPLIED BY OSC
- NO ADJUSTMENT TO SPACECRAFT

11/91
91-0838-319

SHIPPING CONTAINER MEETS TRANSPORTATION REQUIREMENTS

HUGHES

SANTA BARBARA RESEARCH CENTER
a subsidiary

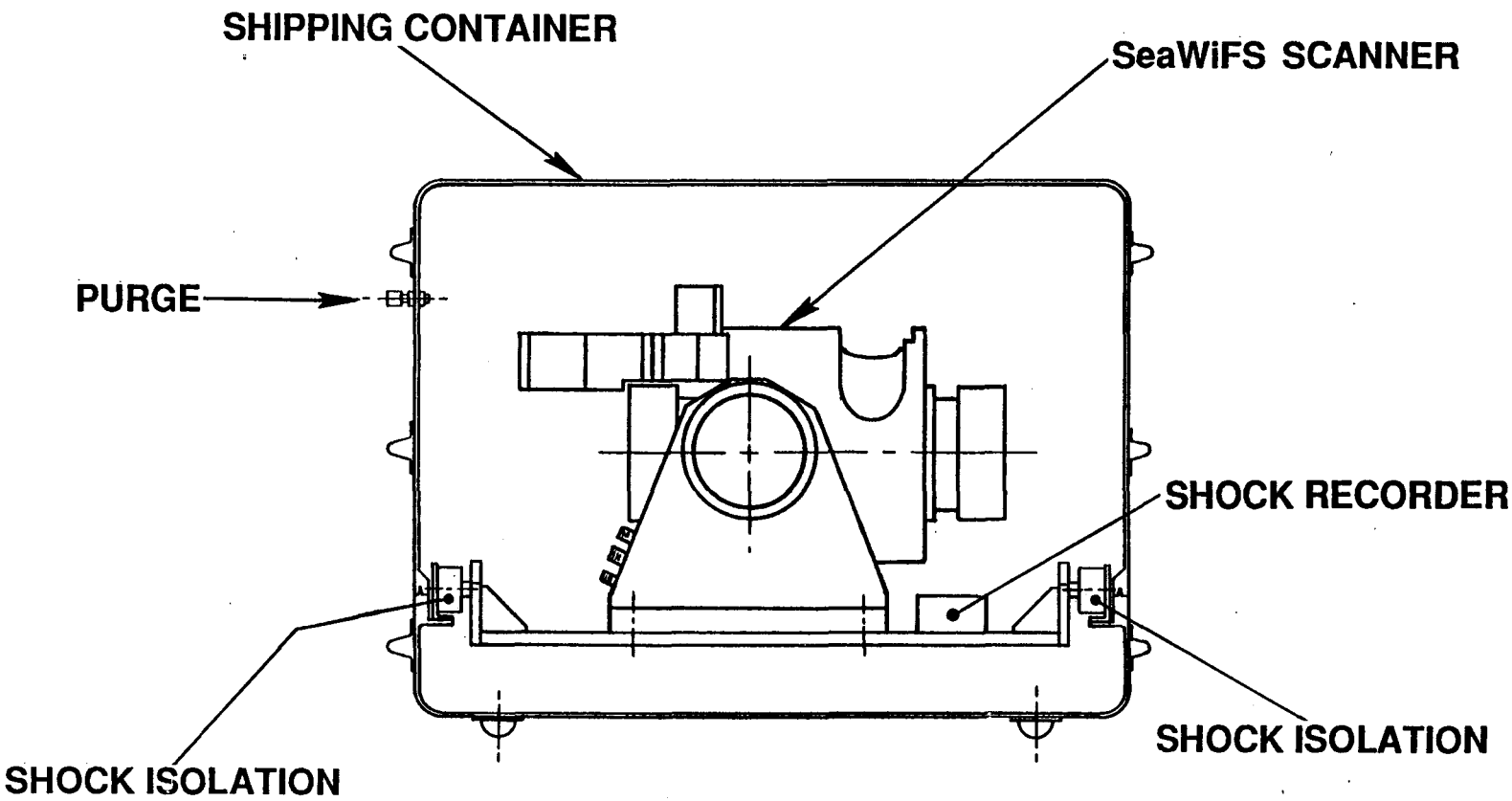

11/91
91-0838-320

TELESCOPE SERVO BEARING AND LUBRICATION SYSTEM ANALYSIS

JOHN BOHNER

11/91
91-0838-320A

TELESCOPE SERVO BEARING AND LUBRICATION SYSTEM

HUGHES

SANTA BARBARA RESEARCH CENTER
a subsidiary

AGENDA

- TELESCOPE AND HALF ANGLE MIRROR DRIVE REQUIREMENTS
- BEARING SYSTEM SELECTION
- LUBRICANT SYSTEM SELECTION
- SYSTEM VALIDATION — LIFE TESTING

BEARING LIFE REQUIREMENT IS 1 BILLION ROTATIONS

HUGHES

SANTA BARBARA RESEARCH CENTER
a subsidiary

REQUIREMENTS

REQUIREMENT	TELESCOPE	HALF ANGLE MIRROR
MOTION	360° CONTINUOUS	360° CONTINUOUS
SPEED	360 RPM	180 RPM
LIFE	5 YEARS (9.5×10^8 REVS)	5 YEARS (4.7×10^8 REVS)
ENVIRONMENT	VACUUM (0PTICAL) –30°C TO 60°C	VACUUM (OPTICAL) –30°C TO 60°C
LOADS	LAUNCH DYNAMICS + PRELOAD	LAUNCH DYNAMICS + PRELOAD
ACCURACY	BETTER THAN 300 MICRORADIANS	BETTER THAN 300 MICRORADIANS

BEARING SELECTION WAS BASED ON HUGHES SPACE AND COMM EXPERIENCE WITH COMMUNICATION SATELLITES

HUGHES

SANTA BARBARA RESEARCH CENTER
a subsidiary

BOTH MECHANISMS WILL USE THE SAME BEARINGS AND LUBRICANTS

BEARING SELECTION WAS DONE BY BEI WITH HAC SBRC AND SCG CONSULTATION

BEARINGS ARE THIN SECTION, GRADE 7T ANGULAR CONTACT BALL BEARINGS:

- 2.00 OD, 1.562 ID RACES OF 440-C ALLOY
- 34 EACH 0.125 IN. DIA. GRADE 5 BALLS OF 440-C ALLOY
- 52% BALL-TO-RACE CONFORMITY
- 3.0 AND 0.8 MICROINCH AA FINISH ON RACES AND BALLS
- 26 POUND, FIXED PRELOAD
- TEFLON TOROID SEPARATORS ON ALTERNATE BALLS
- MELDIN 9000 MICRO POROUS POLYIMIDE LUBRICANT RESERVOIRS

SEVERAL CONSIDERATIONS DRIVE LUBRICANT CHOICE

HUGHES

SANTA BARBARA RESEARCH CENTER
a subsidiary

- VACUUM COMPATIBILITY
- LUBRICATION EFFECTIVENESS
- LOW TEMPERATURE TORQUE
- OPTICAL COMPATIBILITY
- THERMAL RANGE
- RADIATION TOLERANCE
- TORQUE NOISE

LUBRICANT SYSTEM TRADE STUDY INDICATES PENNZANE IS BEST

HUGHES

SANTA BARBARA RESEARCH CENTER
a subsidiary

LUBRICANT	VACUUM	LUBRICITY	ADDITIVES	RISKS
PENNZANE 2000	VERY GOOD	VERY GOOD	VERY GOOD	NO FLIGHT EXP TORQUE?
DEMNUM FLUID	EXCELLENT	FAIR	POOR	ERRATIC LIFE NO FLT EXP
BRAY 815-Z	EXCELLENT	POOR	POOR	ERRATIC LIFE
APIEZON C	GOOD	EXCELLENT	VERY GOOD	OUTGASSING REQUIRES HEATERS
CORRY 55 ETC.	POOR	EXCELLENT	VERY GOOD	OUTGASSING REQUIRES HEATERS

LUBRICANT SYSTEM CHOICE HAS BEEN DISCUSSED WITH NASA-GODDARD

HUGHES

SANTA BARBARA RESEARCH CENTER
a subsidiary

- CONCLUSIONS FROM A MEETING WITH DR. ROEMER PREDMORE (11/21/91)
  - BEST CHOICE IS PENNZANE OR VARIANT
  - MEANINGFUL LIFE TESTING CAN BE DONE BEFORE LAUNCH
  - KNOWN LIMITATIONS OF OTHER FLUIDS ARE UNATTRACTIVE
  - ACCELERATED LIFE TESTING AND VOLATILITY LOSSES SHOULD BE INVESTIGATED

LUBRICANT SYSTEM HAS BEEN SELECTED

HUGHES

SANTA BARBARA RESEARCH CENTER
a subsidiary

LUBRICANT SYSTEM SELECTION

- NYE 2001 OIL (PENNZANE 2000 WITH ANTI-OXIDANTS AND ANTI-WEAR ADDITIVES
- USE MELDIN 9000 MICRO POROUS OIL RESERVOIRS
- USE BARRIER COATING TO CONTAIN THE OIL
- USE LABYRINTHS TO CONTAIN THE OIL

THEORETICAL BEARING LIFE APPROACHES 100 YEARS

HUGHES

SANTA BARBARA RESEARCH CENTER
a subsidiary

SPEED	FLUID	FATIGUE LIFE	F.L. + EHD	LAMBDA
180	BRAY 815-Z	74 YEARS	32 YEARS	0.95
360	BRAY 815-Z	36 YEARS	60 YEARS	1.53
180	PENNZANE	74 YEARS	178 YEARS	2.65
360	PENNZANE	36 YEARS	100 YEARS	4.28

BASED ON 99% RELIABILITY / BEARING

ONGOING EFFORTS TO ASSURE MISSION SUCCESS

HUGHES

SANTA BARBARA RESEARCH CENTER
a subsidiary

- COMPATIBILITY STUDY OF PENNZANE WITH OPTICAL ELEMENTS
- CONTINUED REVIEW OF BEARING STRESSES AND STIFFNESSES
- CONTINUED ANALYSIS OF LUBRICANT VOLATILITY LOSSES
- ACCELERATED LIFE TESTING OF BEARINGS USING PENNZANE

ACCELERATED LIFE TEST PLAN WILL PROVIDE EARLY WARNING OF A PROBLEM

HUGHES

SANTA BARBARA RESEARCH CENTER
a subsidiary

- THREE GROUPS OF BEARINGS ARE PLANNED TO BE TESTED AT THREE DIFFERENT TEMPERATURES AND SPEEDS IN A VACUUM ENVIRONMENT

- BASELINE IS ROOM TEMPERATURE AT 180 RPM

- AT EACH OF THE OTHER TWO ELEVATED TEMPERATURES WE WILL INCREASE ROTATION SPEED UNTIL WE ACHIEVE THE SAME LAMBDA AS WE HAVE IN THE BASE LINE. THE RATIO OF SPEEDS WILL BE THE LIFE TEST ACCELERATION FACTOR.

STRUCTURAL ANALYSIS

JACK BROOKS

11/91
91-0838-349A

STRUCTURAL ANALYSES REVIEWED IN THIS SECTION

HUGHES

SANTA BARBARA RESEARCH CENTER
a subsidiary

- REQUIREMENTS OVERVIEW
- PRIMARY MIRROR — 360 RPM SPIN G-LOADING
- HALF-ANGLE MIRROR — THERMAL LOADING
- STRUCTURAL MODEL OF SCANNER
- MODAL WEIGHT PLOTS
- RANDOM VIBRATION INDUCED STRESSES
- PYRO SHOCK INDUCED RESPONSES
- SUMMARY

ANALYSIS OBJECTIVES

HUGHES

SANTA BARBARA RESEARCH CENTER
a subsidiary

- ENSURE INSTRUMENT STRUCTURAL DESIGN INTEGRITY WHEN SUBJECTED TO LAUNCH LOADS:
  - RANDOM VIBRATION
  - PYROTECHNIC SHOCK
- PROVIDE MOTOR TRANSFER FUNCTIONS
- DETERMINE VIBRATION MODES

SEASTAR RANDOM VIBRATION LEVELS

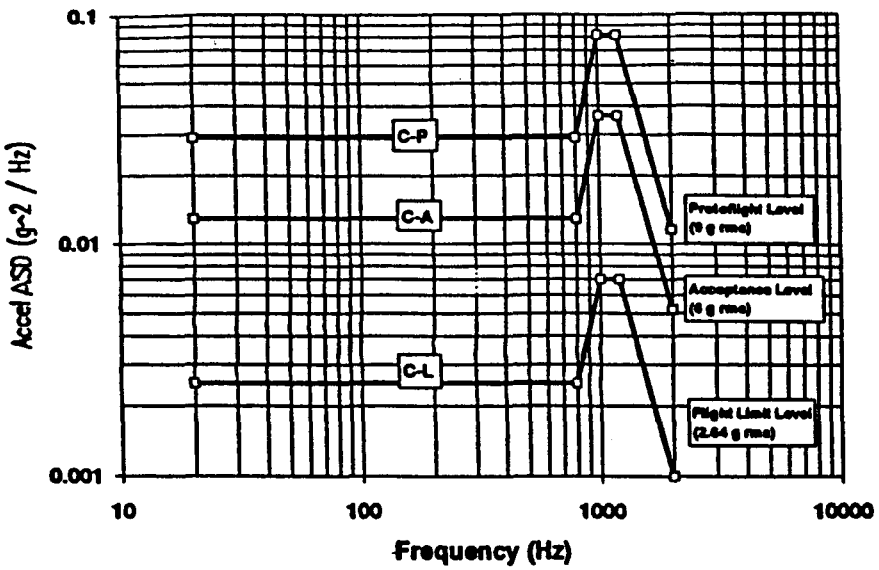

PAYLOAD SHELF PYRO SHOCK RESPONSE

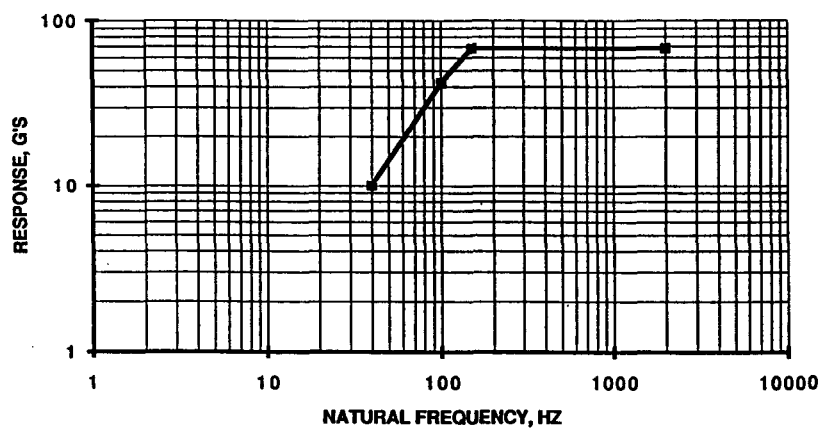

ACCELERATIONS - -8.6X 0.8Y 2.85Z

HUGHES

SANTA BARBARA RESEARCH CENTER
a subsidiary

ENVIRONMENTAL LOADS

11/91
91-0838-350B

PRIMARY MIRROR ANALYSIS

HUGHES

SANTA BARBARA RESEARCH CENTER
a subsidiary

- ANALYZED FOR 11G SPIN FORCES
- DEFLECTIONS ARE WELL WITHIN TOLERANCES

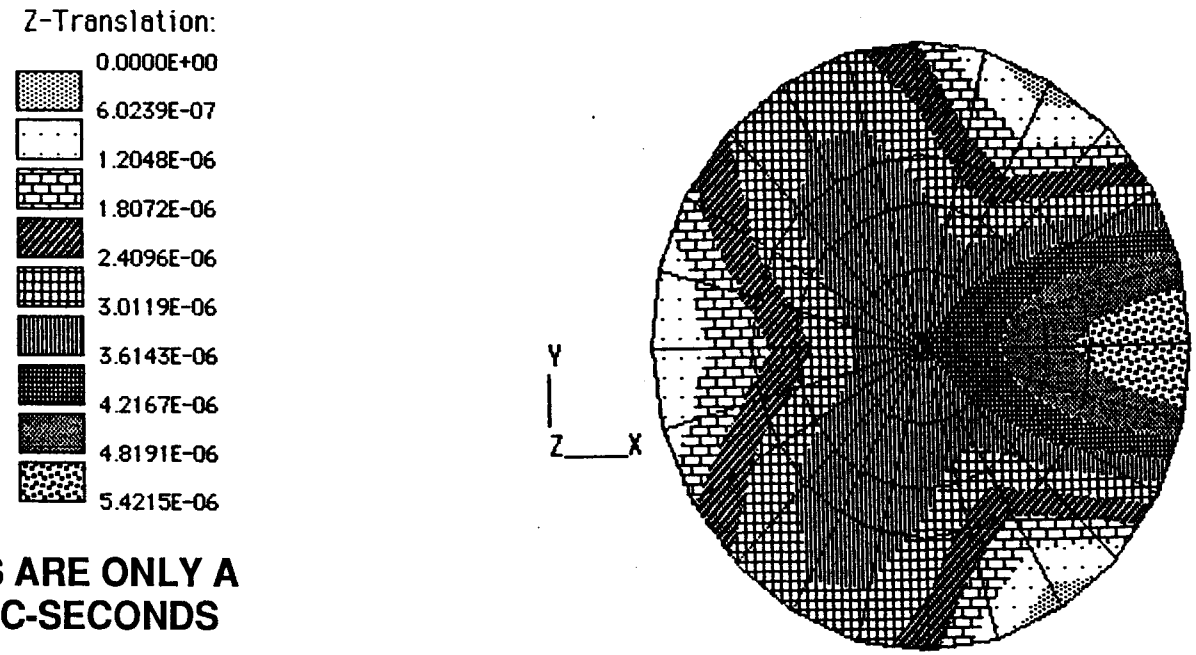

SLOPES ARE ONLY A FEW ARC-SECONDS

11/91
91-0838-351

THE PRIMARY MIRROR MOUNT MAINTAINS MIRROR ALIGNMENT UNDER CENTRIFUGAL LOADING

HUGHES

SANTA BARBARA RESEARCH CENTER
a subsidiary

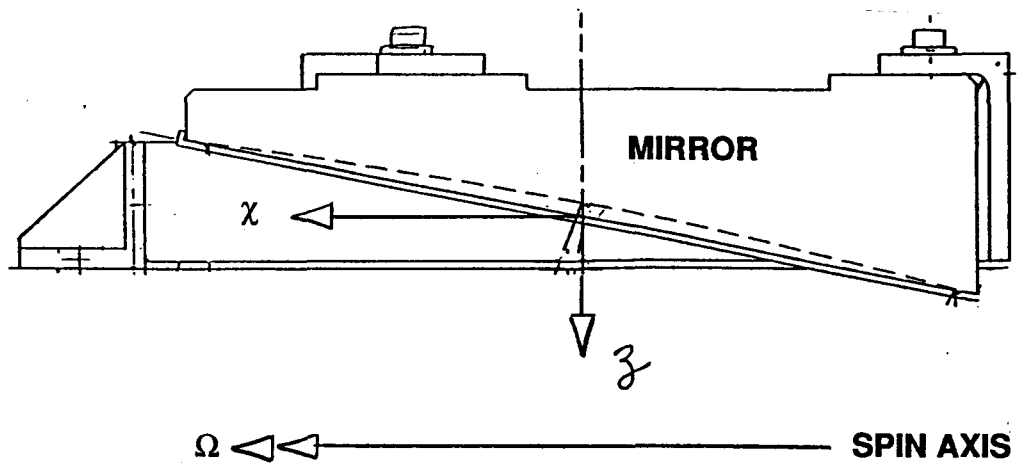

MIRROR DEFLECTIONS DUE TO 11G SPIN FORCES					
TX	TY	TZ	RX	RY	RZ
–39.1	0.32	–85	2.06	–2.6	–1.18

ALL VALUES ARE IN MICROINCHES AND MICRORADIANS
TX = TRANSLATION IN X DIRECTION
RX = ROTATION ABOUT X AXIS

11/91
91-0838-352

HALF-ANGLE MIRROR HAS HIGH MARGINS

HUGHES

SANTA BARBARA RESEARCH CENTER
a subsidiary

- THE MIRROR WAS CHECKED FOR 50G STATIC AND +30C THERMOELASTIC LOAD-INDUCED STRESS
- 50G LOAD MARGINS OF SAFETY ~40
- THERMOELASTIC MARGIN OF SAFETY ~0.75 ASSUMING 93500 ADHESIVE
- SPIN LOADS NOT A PROBLEM

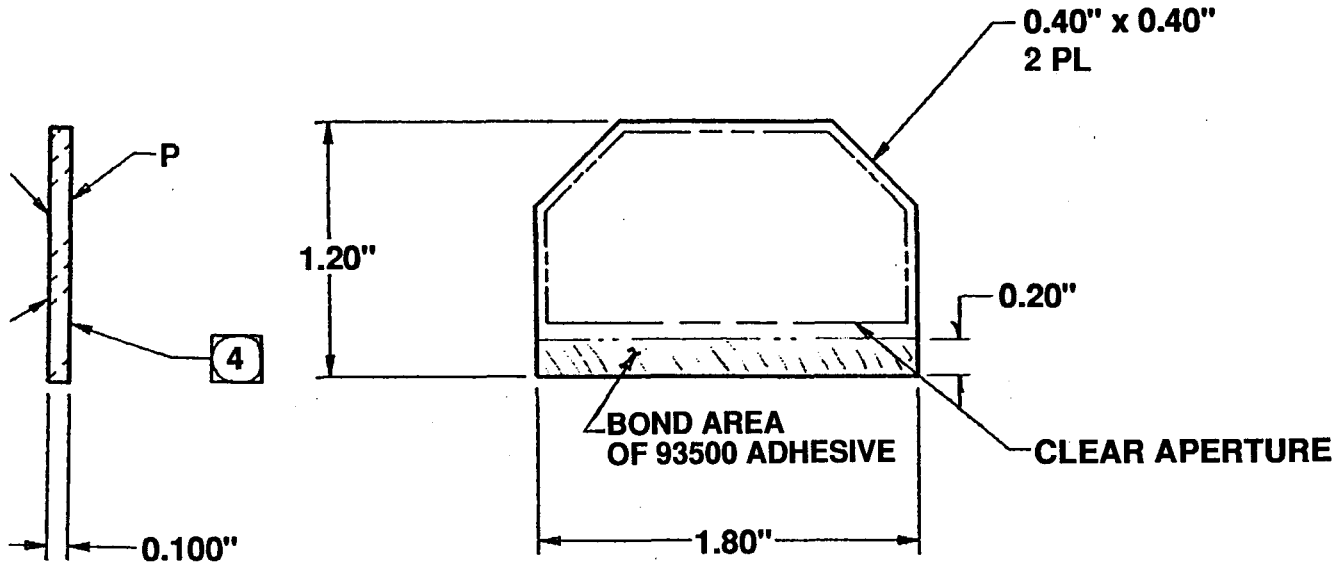

11/91
91-0838-353

STRUCTURAL MODEL FINITE ELEMENT MESH

HUGHES

SANTA BARBARA RESEARCH CENTER
a subsidiary

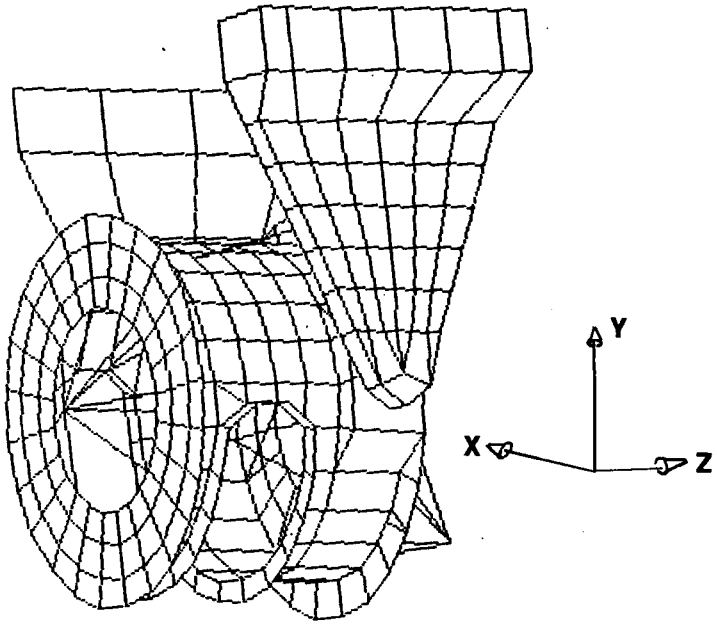

- MODEL STATISTICS
  - 479 NODES
  - 63 BEAMS
  - 4 TRIANGULAR PLATE ELEMENTS
  - 430 QUAD. ELEMENTS
  - 15 SOLID ELEMENTS
  - 1427 DEGREES OF FREEDOM

WEIGHT	44 LB ESTIMATED	
$W*K^2$	140X	94Y, 217Z

MODAL WEIGHT PLOTS INDICATE NO SIGNIFICANT CONTRIBUTING MODES BELOW 40 Hz

HUGHES

SANTA BARBARA RESEARCH CENTER
a subsidiary

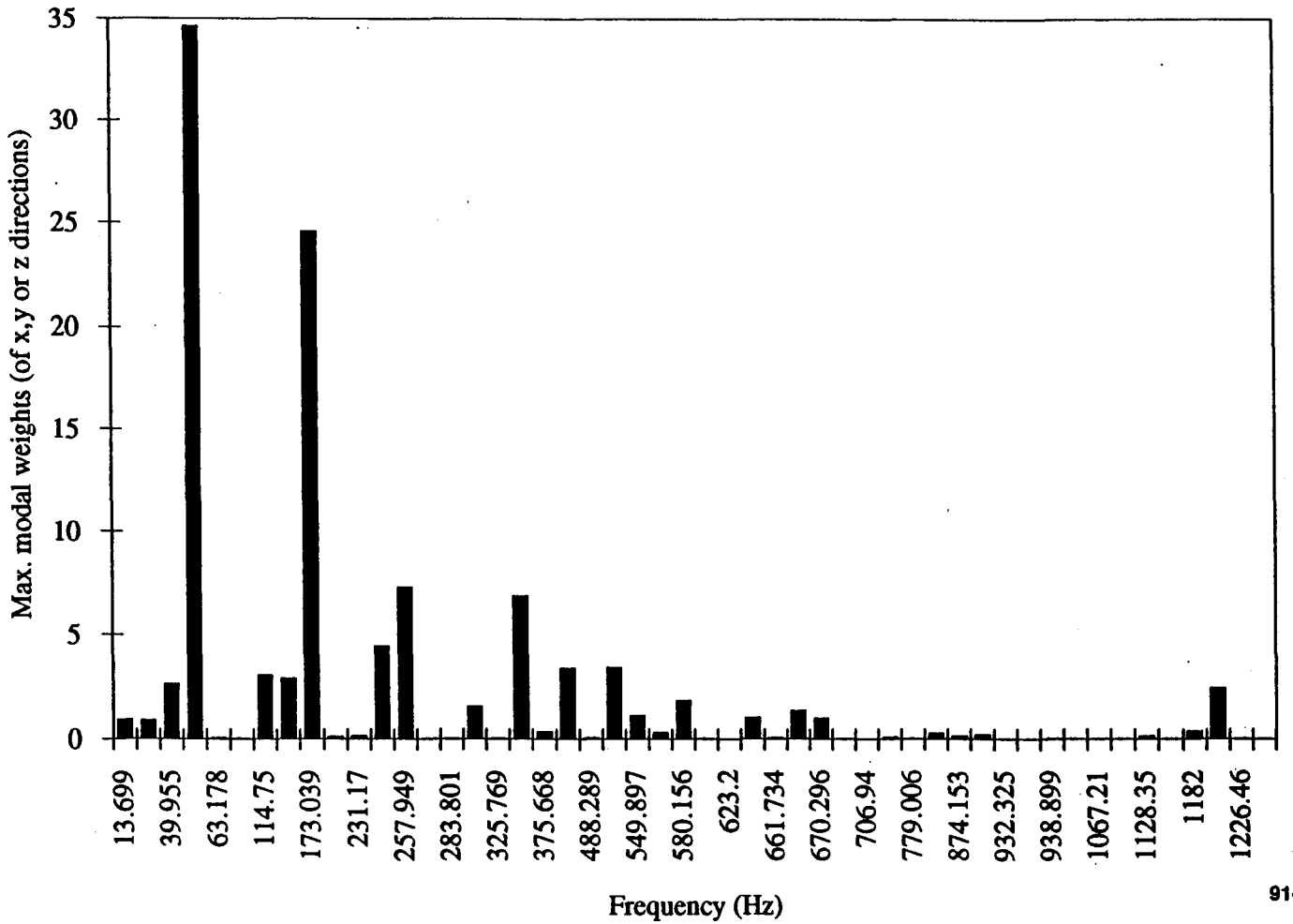

11/91
91-0838-357

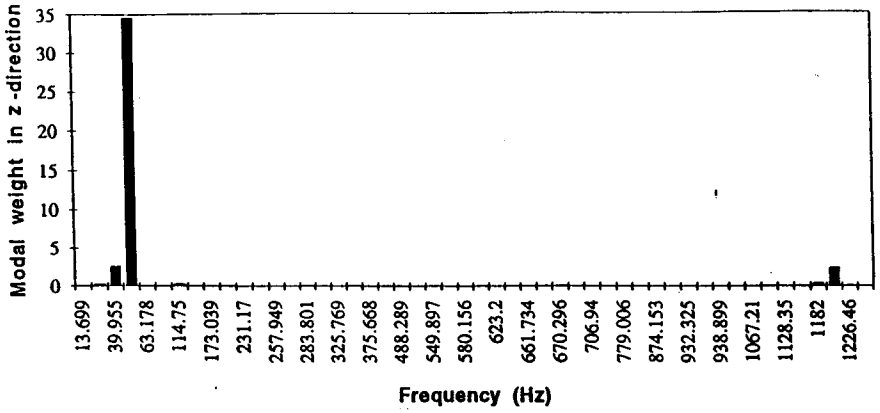

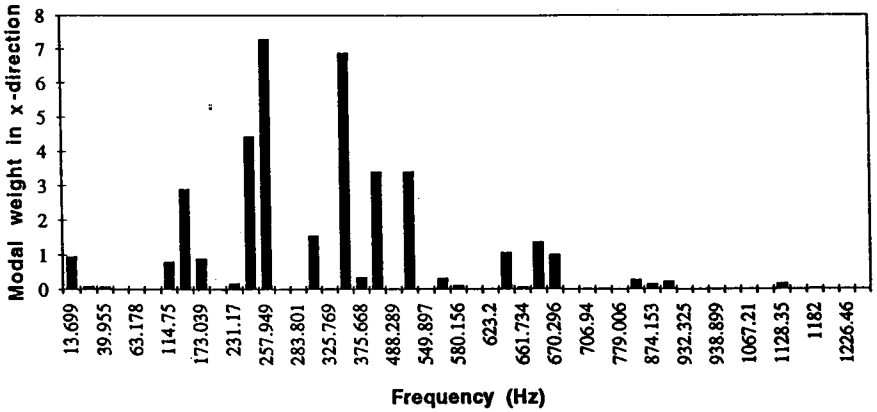

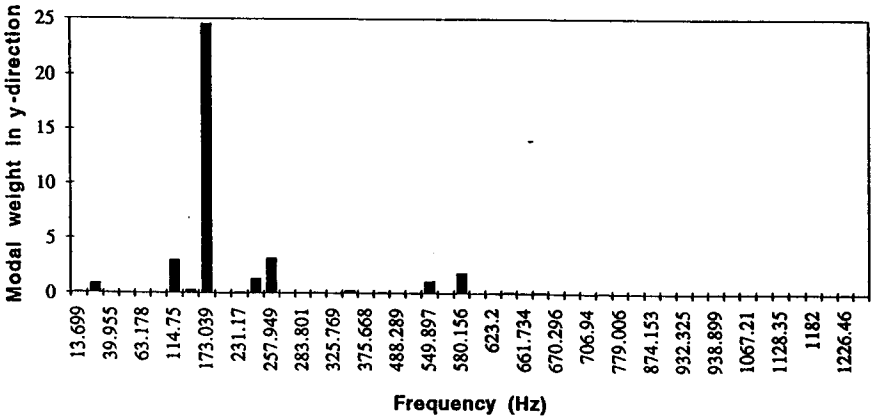

HUGHES

SANTA BARBARA RESEARCH CENTER
a subsidiary

MODAL WEIGHT ANALYSIS BY DIRECTION INDICATES LOWEST FREQUENCY MODE IS IN DIRECTION PARALLEL TO TILT AXIS

SeaWiFS™

11/91
91-0838-358

SCANNER RANDOM VIBRATION RESPONSE SUMMARY

HUGHES

SANTA BARBARA RESEARCH CENTER
a subsidiary

- MAXIMUM RANDOM RESPONSE ACCELERATIONS

COMPONENT	ACCELERATION, GRMS	
AFT OPTICS ASSEMBLY AND HALF-ANGLE MIRROR	5.86	
SCAN MOTOR	7.9	
MAXIMUM RMS STRESSES —		
TRI-PLATE STRESS	1030 PSI	M.S. = 34
QUAD-PLATE	4100 PSI	M.S. = 7.8

SCANNER SHOCK RESPONSE SUMMARY

HUGHES

SANTA BARBARA RESEARCH CENTER
a subsidiary

COMPONENT	ACCELERATION, G's		
	X	Y	Z
AFT OPTICS ASSEMBLY AND HALF-ANGLE MIRROR	22	35	62
SCAN MOTOR	28	40	49
MOMENTUM COMP MOTOR	23	35	48
SUPP. ARM TILT MOTOR	67	55	44

THE PYRO SHOCK SPECTRUM HAS PROBLEM POTENTIAL

HUGHES

SANTA BARBARA RESEARCH CENTER
a subsidiary

- THE PYRO SHOCK RESPONSE HAS THE POTENTIAL TO DRIVE THE DESIGN
- THE SHOCK SPECTRUM SEEMS HIGH FOR THE PAYLOAD PLATFORM (THE ENERGY OF THE SEPARATION PLANE SHOCK SOURCE IS SMALL)
- OSC IS REVIEWING THE ATTENUATION LEVELS AND LOW FREQUENCY END
- UPDATED LEVELS HAVE BEEN RECEIVED AND ARE BEING REVIEWED

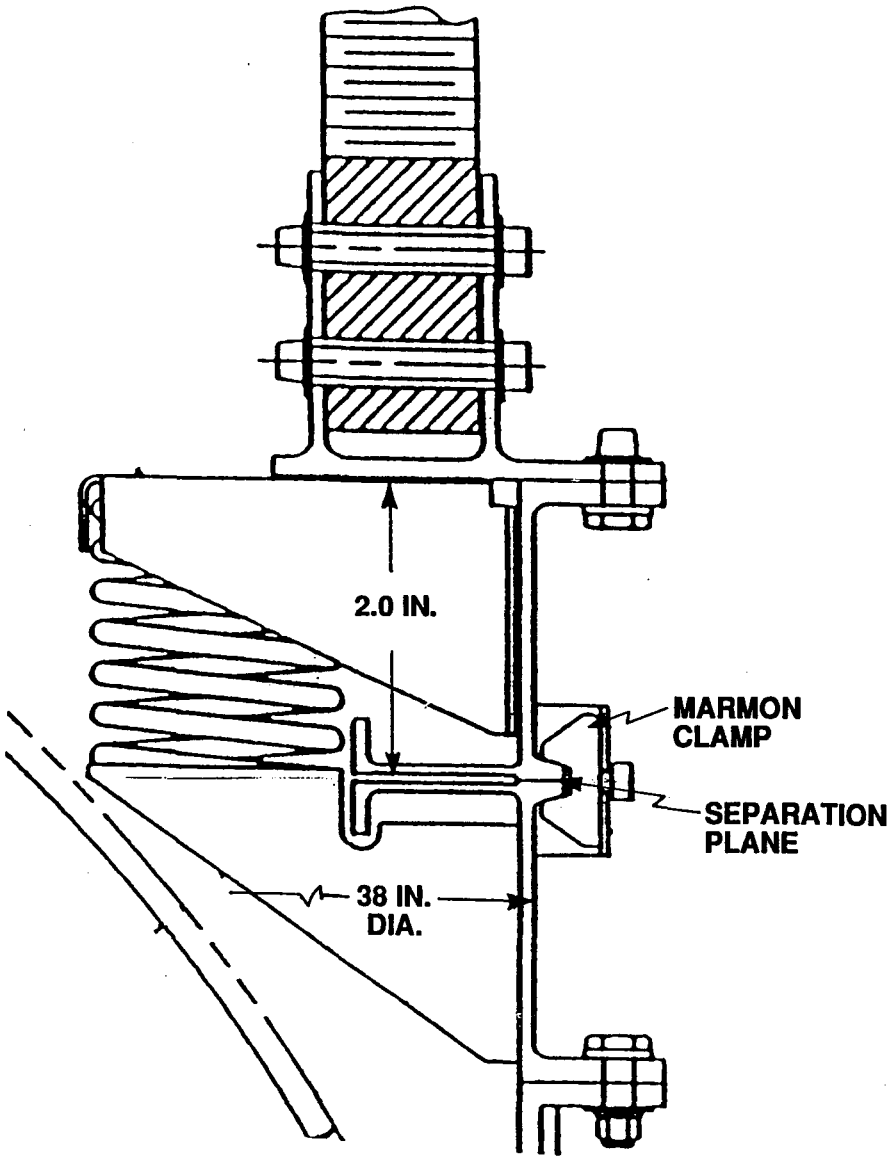

HUGHES

SANTA BARBARA RESEARCH CENTER
a subsidiary

SHOCK SOURCE IS THE SUDDEN STRAIN RELEASE AFTER A PYROTECHNIC CUTTING OF A MARMON CLAMP

SeaWiFS™

11/91
91-0838-363A

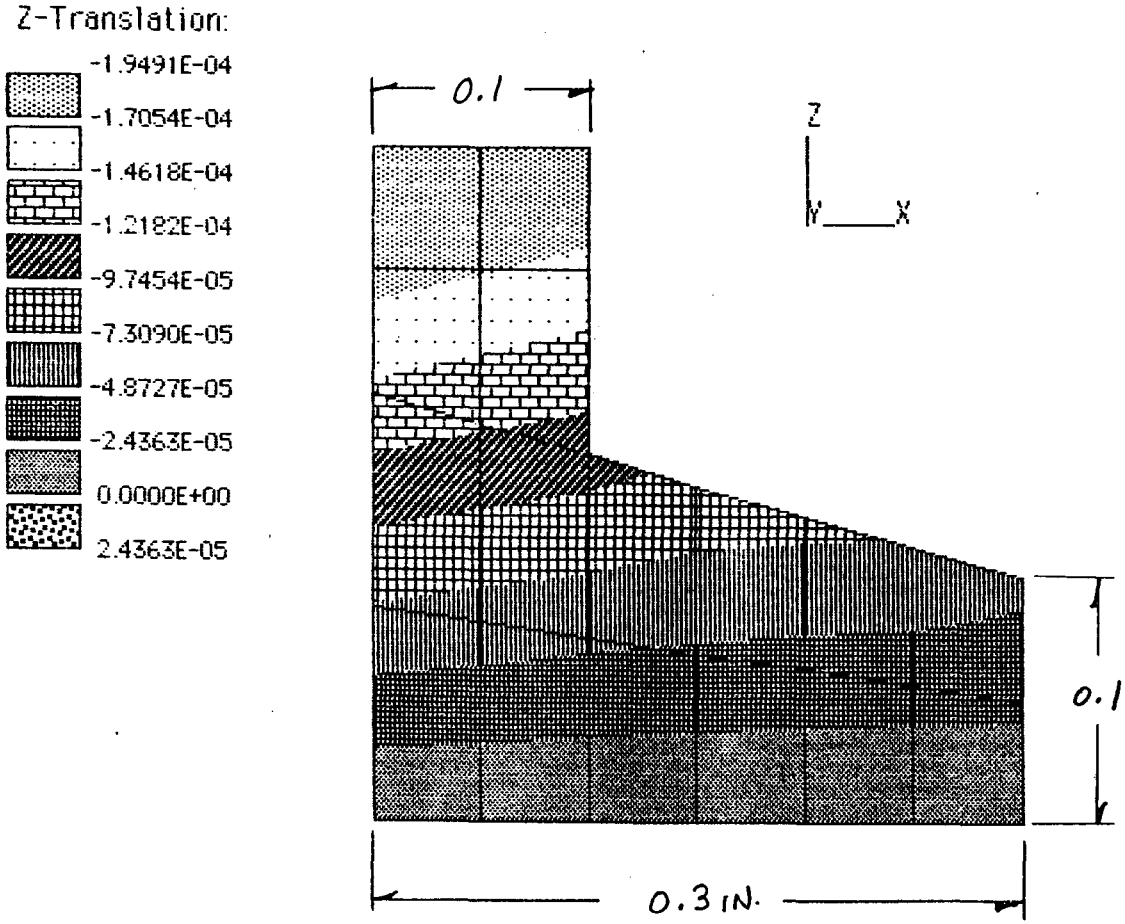

TOTAL FLANGE STRAIN ENERGY = 1.7 IN.-LB

HUGHES

SANTA BARBARA RESEARCH CENTER
a subsidiary

FLANGE DISPLACEMENTS DUE TO MARMON CLAMP PRESSURE ARE ONLY MICROINCHES

SeaWiFS

11/91
91-0838-363B

RESULTS OF MARMON CLAMP RELEASE SHOCK STUDY

HUGHES

SANTA BARBARA RESEARCH CENTER
a subsidiary

PLATFORM/SCANNER/ELEC. MODULE	f = 24 Hz
FLANGE STRAIN ENERGY	1.7 in-lb
TRANSFERRING ALL STRAIN ENERGY TO PLATFORM:	
SCANNER/EM ACCELERATION	2 G
SHOCK SPECTRUM APPLIED TO PLATFORM	4 G
SHOCK APPLIED TO SCANNER ONLY (THE SPECIFIED METHOD OF APPLICATION)	68 G
SHOCK REDUCTION OVER SPEC. METHOD:	34 TIMES

NOTE THAT IN REALITY, MUCH OF THE STRAIN ENERGY WOULD BE ABSORBED BY MUCH OF THE INTERVENING STRUCTURE AND LITTLE WOULD REACH THE SCANNER/EM, REDUCTION WOULD BE EVEN GREATER THAN THE FACTOR OF 34.

SUMMARY OF RESULTS

HUGHES

SANTA BARBARA RESEARCH CENTER
a subsidiary

- PRIMARY MIRROR DEFLECTIONS DUE TO 11G SPIN ARE WITHIN TOLERANCES
- HALF-ANGLE MIRROR STRESSES ARE LOW
- MODAL WEIGHT PLOTS INDICATE NO SIGNIFICANT MODES BELOW 40 Hz
- RANDOM RESPONSE STRESSES ARE LOW
- PYRO SHOCK RESPONSE COULD POTENTIALLY AFFECT DESIGN
- SHOCK SPECTRUM REDUCTION BEING DISCUSSED WITH OSC

SCANNER THERMAL DESIGN/ANALYSIS

PAUL BORTFELDT

11/91
91-0838-370

SCANNER THERMAL DESIGN IS CHALLENGING DUE TO COMPLEX EXTERNAL GEOMETRY AND TILT

HUGHES

SANTA BARBARA RESEARCH CENTER
a subsidiary

- SCANNER DESIGN INCORPORATES COMPLEX EXTERNAL GEOMETRY
  - DIFFICULT TO EFFECTIVELY BLANKET WITH MLI
  - COMPLICATE RADIATIVE INTERCHANGE CALCULATIONS
- TILT REQUIREMENT
  - VARYING TILT ANGLE AFFECTS ABSORBED ENVIRONMENTAL LOADS
  - PIVOT BEARINGS MUST BE THERMALLY CONDUCTIVE
    - LARGE TEMPERATURE DIFFERENTIAL BETWEEN SCANNER AND SUPPORT STRUCTURE IMPACTS POINTING ACCURACY
  - FURTHER RESTRICTS MLI USE
- PAYLOAD SHELF TEMPERATURE RANGE IS VERY LARGE (–15 TO 45°C)

THERMAL INTERFACE IS WITHIN SPECIFICATIONS

HUGHES

SANTA BARBARA RESEARCH CENTER
a subsidiary

REQUIREMENT		ALLOWABLE	DESIGN
SCANNER TO S/C INTERFACE CONDUCTANCE (W/°C)	MOUNTS (TOTAL)	<0.8	0.12
	GROUND STRAP	<0.5	0.03
INTERFACE TEMPERATURE (°C)	OPERATING	0 TO 35	5 TO 30
	NONOPERATING	–30 TO +50	–20 TO +30

- INTERFACE RADIATIVE COUPLING — TBD

SCANNER THERMAL CONTROL SYSTEM EMPLOYS WHITE PAINT AND LOW ε GOLD

HUGHES

SANTA BARBARA RESEARCH CENTER
a subsidiary

- ELECTROPLATED GOLD SELECTED AS EXTERNAL SURFACE COATING
- WHITE PAINT USED FOR RADIATING SURFACES
- SURFACE PROPERTIES:

MATERIAL	BEGINNING OF LIFE		END OF LIFE		BLANKET EFFECTIVE ε
	α_s	ε	α_s	ε	
WHITE PAINT	0.15	0.90	0.30	0.88	
GOLD	0.20	0.05	0.20 TO 0.35	0.04 TO 0.07	
MLI BLANKETS (OUTER LAYER)	0.30	0.65	0.45	0.75	0.05

11/91
91-0838-372A

SCANNER EMPLOYS A DISTRIBUTED THERMAL CONTROL APPROACH

HUGHES

SANTA BARBARA RESEARCH CENTER
a subsidiary

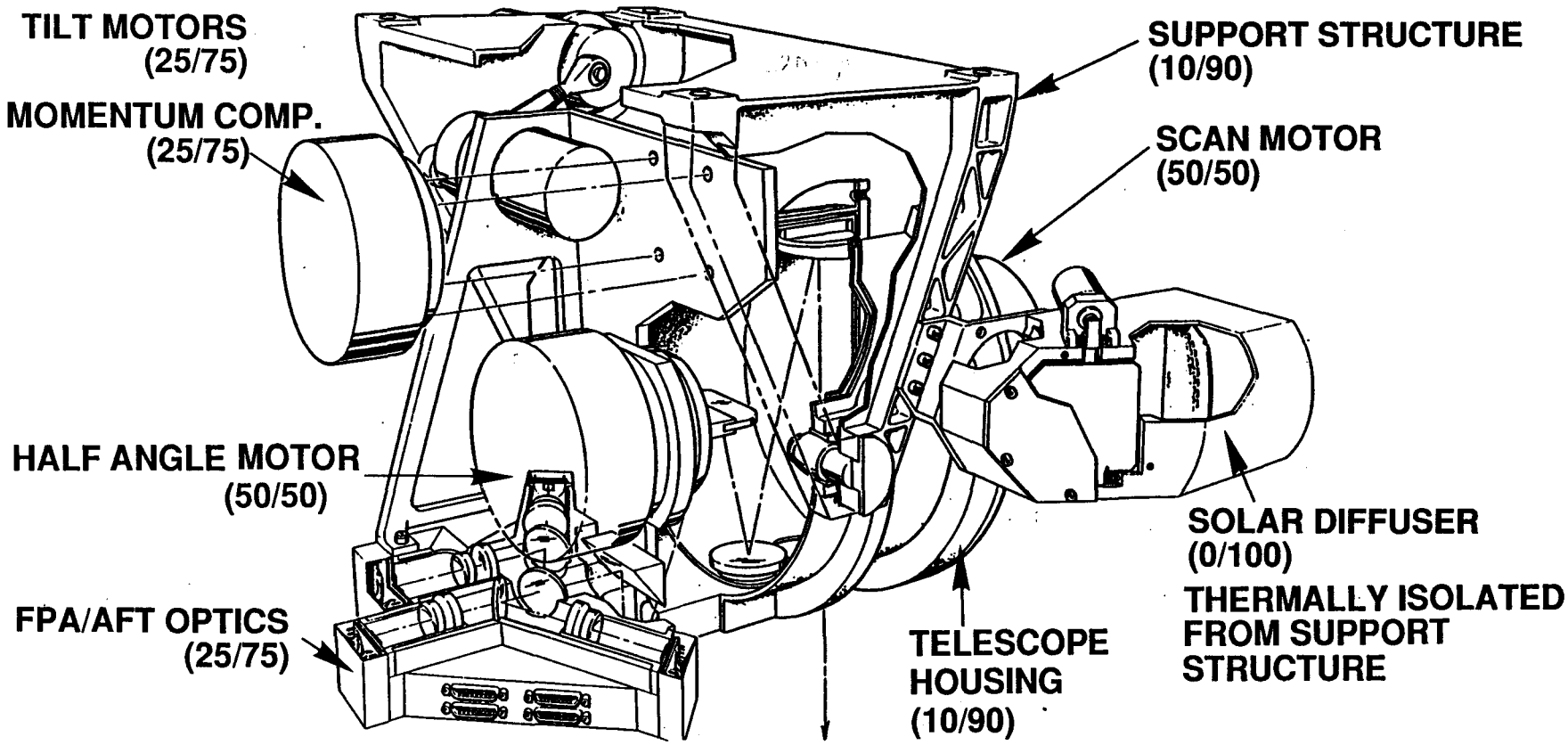

PARENTHETICAL NUMBERS INDICATE RATIO OF WHITE PAINT TO GOLD

11/91
91-0838-374A

SCANNER INTERNAL POWER DISSIPATION IS RELATIVELY CONSTANT

HUGHES

SANTA BARBARA RESEARCH CENTER
a subsidiary

- MAKEUP HEATERS PROVIDED TO COMPENSATE FOR FPA SWITCHING
- MOTORS/ENCODERS HAVE 100% DUTY CYCLE

NOMINAL POWER DISSIPATIONS DURING NORMAL OPERATION

SOURCE	DATA COLLECTION (W)	ECLIPSE (W)	ORBIT AVERAGE (W)
MOTORS/ENCODERS	11.5	11.5	11.5
FPAs	1.2	0	0.5
PREAMPS	0.9	0	0.4
MAKEUP HEATERS (FPA)	0	2	1.2
TILT DRIVE	0*	0*	0*
TOTALS	13.6	13.5	13.6

*TILT ACTUATOR DUTY CYCLE IS <2%

THERMAL ANALYSIS APPROACH

HUGHES

SANTA BARBARA RESEARCH CENTER
a subsidiary

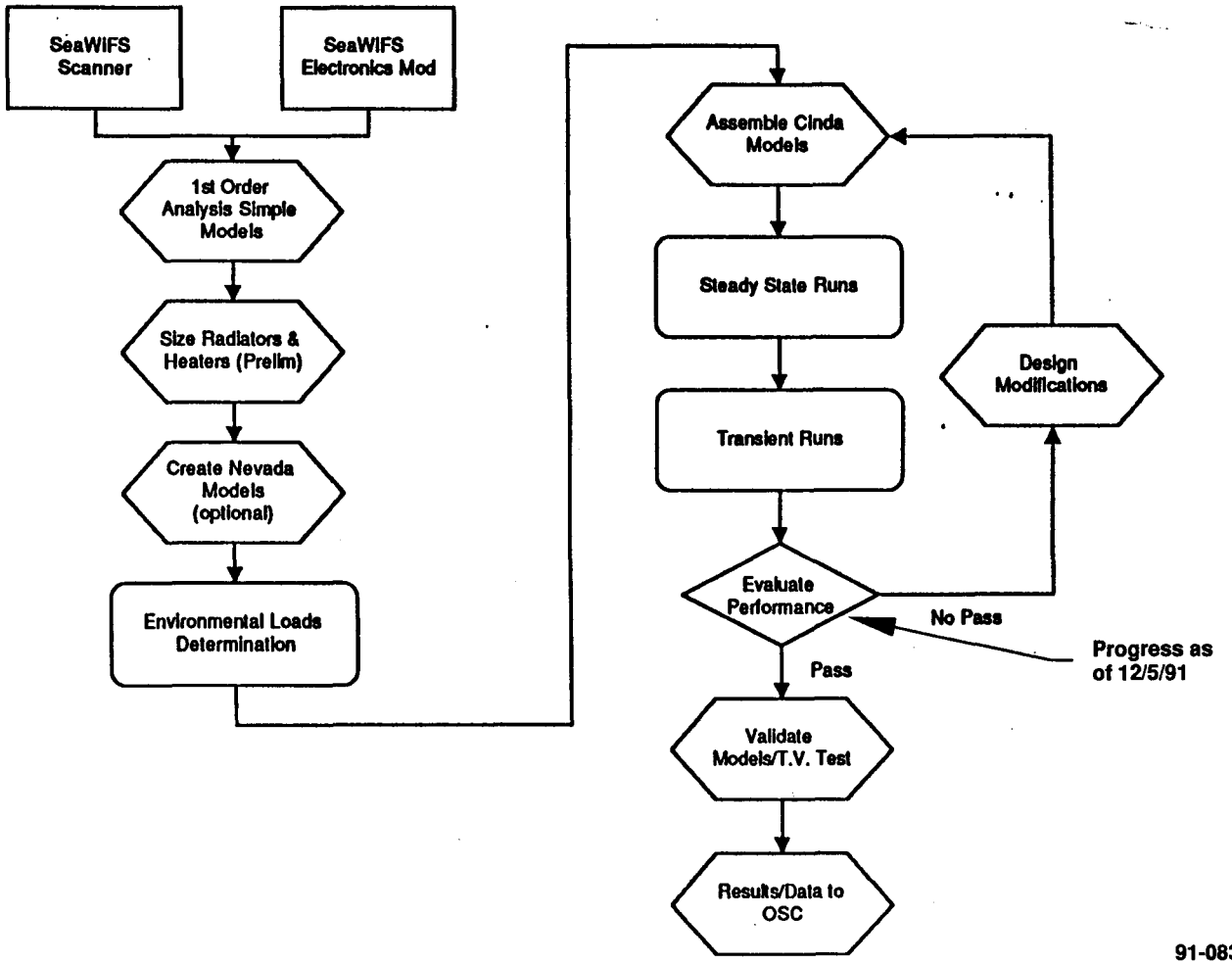

11/91
91-0838-375B

COMPUTER MODELS USED TO VERIFY THERMAL CONTROL PLAN

HUGHES

SANTA BARBARA RESEARCH CENTER
a subsidiary

- TWO THERMAL CODES USED
  - NEVADA RADIATION ANALYZER
    - SCANNER MODEL — 30 SURFACES
- CINDA FINITE DIFFERENCE CODE
  - SCANNER MODEL
    - 21 NODES
    - 97 CONDUCTORS

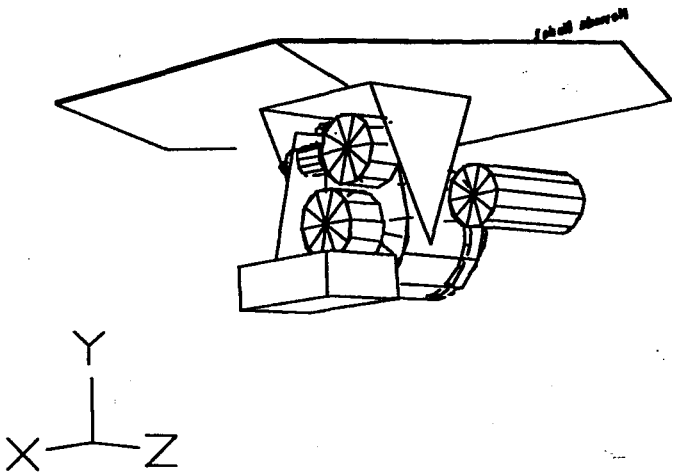

SCANNER NEVADA MODEL
(SHOWN AT 0° TILT ANGLE)

11/91
91-0838-376A

SCANNER ENVIRONMENTAL ENERGY FLUX IS SIGNIFICANT

HUGHES

SANTA BARBARA RESEARCH CENTER
a subsidiary

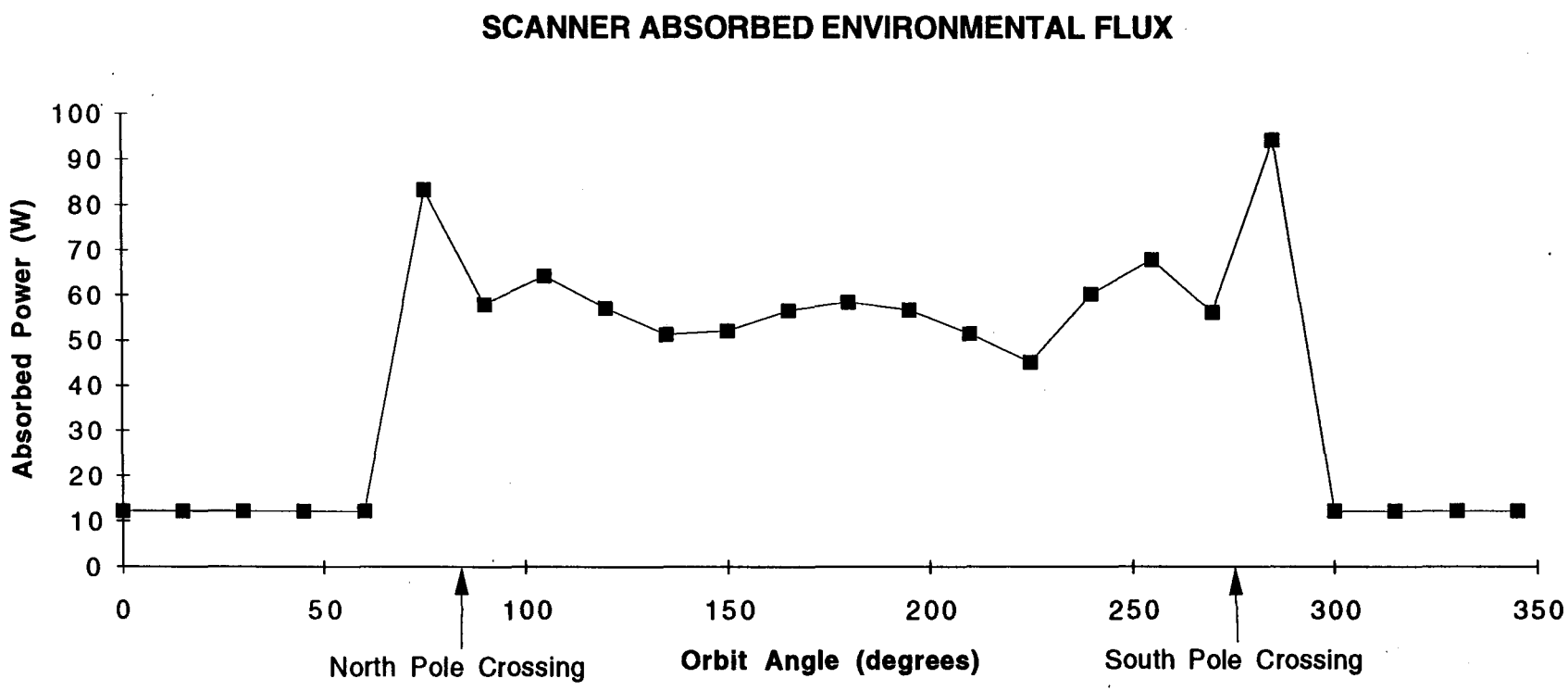

- **ORBIT AVERAGE FLUX = 42.7W**

11/91
91-0838-377A

SCANNER THERMAL ANALYSIS INDICATES PERFORMANCE IS WITHIN ACCEPTABLE LIMITS

HUGHES

SANTA BARBARA RESEARCH CENTER
a subsidiary

INSTRUMENT REGION	WORST CASE HOT* PAYLOAD SHELF = 30°C, EOL CONDITIONS TEMPERATURE MIN/MAX °C	WORST CASE COLD* PAYLOAD SHELF = -10°C, BOL CONDITIONS TEMPERATURE MIN/MAX °C	(S)PECIFIED OR (A)LLOWABLE RANGE °C	
TELESCOPE HOUSING (OUTER)	22/32	5/13	–5/45	A
ROTATING BAFFLE	20/25	4/8	–5/45	A
SCAN MOTOR STATOR	21/32	6/14	5/45	A
HALF ANGLE STATOR	22/29	7/13	5/45	A
MOMENTUM COMPENSATOR	22/27	8/12	5/45	A
AFT OPTICS/FPAs	26/32	8/13	0/35	A
TILT LINK	26/28	8/10	–5/45	A
BASE (MOUNTING)	26/31	5/10	0/35	S

*PAYLOAD SHELF TEMPERATURE IS ASSUMED CONSTANT OVER AN ORBIT

11/91
91-0838-378A

SCANNER HOT/COLD OPERATING EXTREMES

HUGHES

SANTA BARBARA RESEARCH CENTER
a subsidiary

BEGINNING OF LIFE CONDITIONS

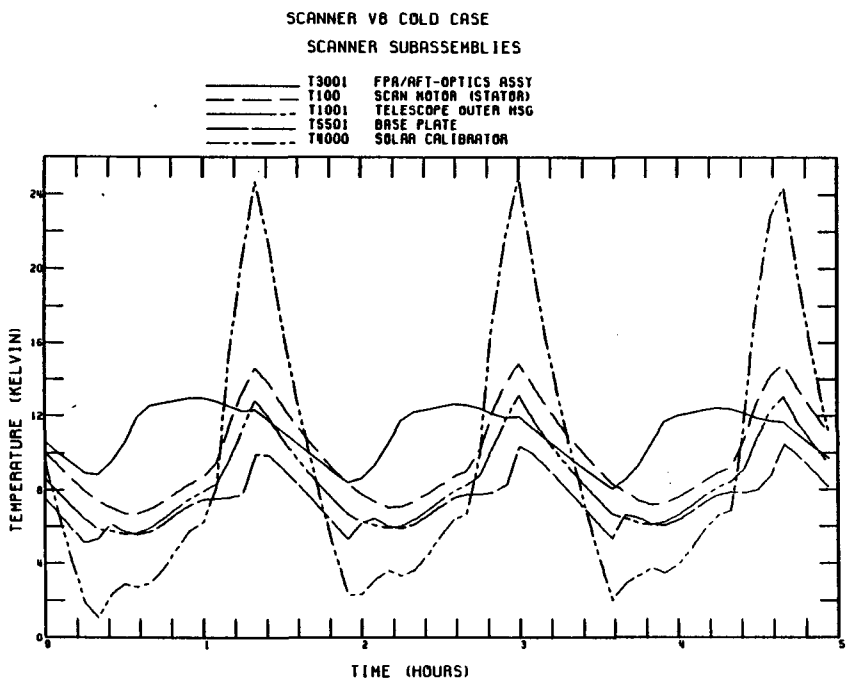

S/C MOUNT TEMPERATURE = –10°C

END OF LIFE CONDITIONS

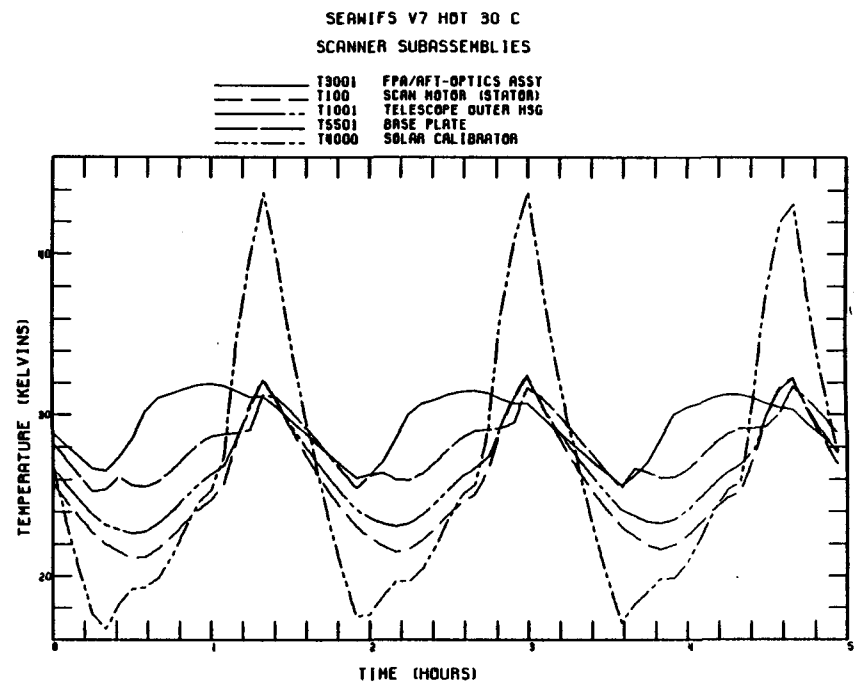

S/C MOUNT TEMPERATURE = +30°C

11/91
91-0838-379A

TEMPERATURE-INDUCED POINTING ERROR IS WITHIN ALLOWABLE BUDGET

HUGHES

SANTA BARBARA RESEARCH CENTER
a subsidiary

LINK TEMPERATURE VARIATIONS

- POINTING ACCURACY AFFECTED BY TILT DRIVE TEMPERATURE GRADIENTS

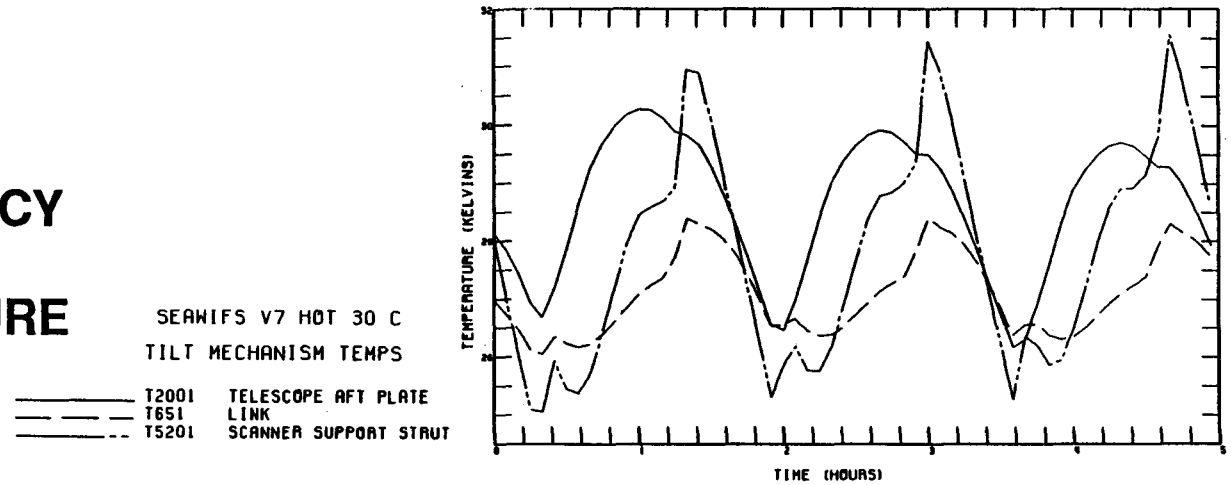

- ERROR BUDGET FOR THERMAL EFFECTS = 50 μRAD
- BUDGET ALLOWS FOR 10°C UNCERTAINTY IN SCANNER — BASE TEMPERATURE Δ
- PREDICTED MAXIMUM ERROR FROM GRADIENTS = ~30 μRADS

11/91
91-0838-380A

SAFE STATE POWER REQUIREMENTS CAN BE MET

HUGHES

SANTA BARBARA RESEARCH CENTER
a subsidiary

- HEATER POWER
  - ALLOWABLE = 30W TOTAL
  - DESIGN
    - SCANNER = 18W
    - ELECTRONICS MODULE = 12W
- INTERFACE TEMPERATURES (ASSUMING WORST CASE CONDITIONS)
  - ALLOWABLE = –30°C
  - DESIGN (SCANNER) = -20°C (MINIMUM)

HEATER ACTIVATION BEGINS 80 MINUTES AFTER ENTERING SAFE STATE

HUGHES

SANTA BARBARA RESEARCH CENTER
a subsidiary

SCANNER SAFE STATE (–10°C)
SCANNER SUBASSEMBLIES

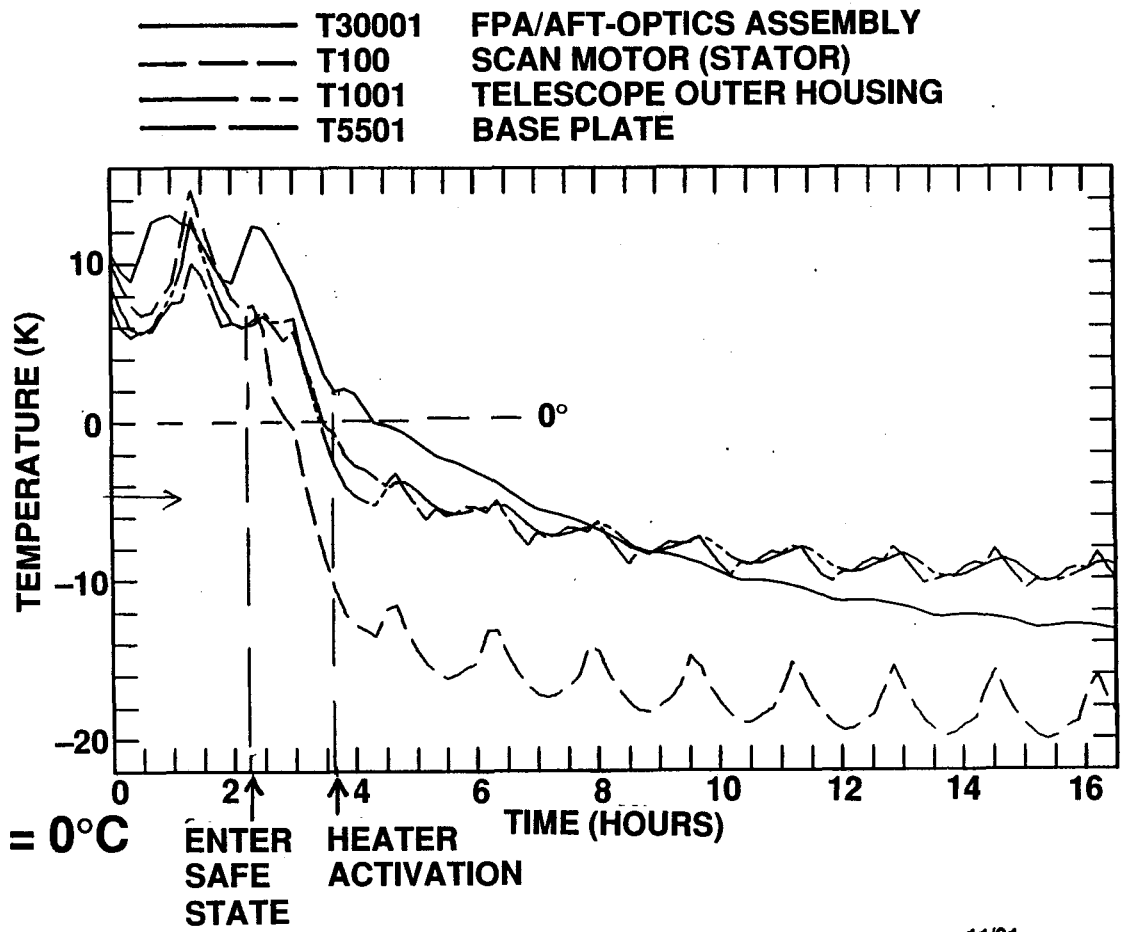

- HEATER SET POINT = 0°C

11/91
91-0838-382A

SCANNER THERMAL SUMMARY

HUGHES

SANTA BARBARA RESEARCH CENTER
a subsidiary

- ANALYSIS INDICATES THERMAL DESIGN USING GOLD, WHITE PAINT AND MAKEUP HEAT PROVIDES ACCEPTABLE PERFORMANCE
- INTERNAL AND INTERFACE TEMPERATURES MEET SPECIFICATIONS DURING NORMAL OPERATION AND SAFE STATE
- THERMAL CONTROL DESIGN REFINEMENTS CONTINUING. AREAS OF FURTHER STUDY:
  - LIMITED USE OF MLI BLANKETS
  - STABILITY IMPROVEMENT WITH ADDITIONAL MAKEUP HEAT
  - TILT DRIVE POINTING ACCURACY (THERMAL EFFECTS)
- EXTREMELY WIDE PAYLOAD SHELF TEMPERATURE RANGE IS COMPLICATING THERMAL DESIGN
  - LARGE CONTRIBUTOR TO HOT/COLD CASE DIFFERENTIAL
  - SUGGEST REFINING SPECIFICATION TO PROVIDE SEPARATE OPERATING/SAFESTATE RANGES

SCAN, TILT, AND ANGULAR MOMENTUM CONTROL

R. CUBALCHINI
R. KAWAKITA
K. TAKAMIYA

11/91
91-0838-401

WE WILL COVER

HUGHES

SANTA BARBARA RESEARCH CENTER
a subsidiary

- TELESCOPE SERVO CONTROL
- TILT CONTROL
- ANGULAR MOMENTUM CONTROL

TELESCOPE SERVO

- REQUIREMENTS
- PHILOSOPHY
- DESIGN
- PERFORMANCE

REQUIREMENTS ARE DOMINATED BY ACCURACY AND LIFE

HUGHES

SANTA BARBARA RESEARCH CENTER
a subsidiary

• SCAN RATE	6±0.01 REVOLUTIONS PER SECOND
• IN SCAN JITTER	<90 μrad
• LIFE TIME	>5 YEARS
• REDUNDANCY	TOTALLY REDUNDANT ELECTRONICS MOTORS MUST CONTAIN REDUNDANT WINDINGS ENCODERS MUST BE REDUNDANT
• TORQUE MARGIN	>4× AT SPEED AT BEGINNING OF LIFE

11/91
91-0838-404

CONTROL SCHEME CHOSEN OPTIMIZES SYNCHRONIZATION BETWEEN SCANNER AND VIDEO

HUGHES

SANTA BARBARA RESEARCH CENTER
a subsidiary

- MASTER CLOCK COMMANDS TELESCOPE SCANNER IN BOTH POSITION AND RATE
- HALF ANGLE MIRROR SCANNER IS SLAVED TO TELESCOPE SCANNER READOUT
- VIDEO CLOCK IS DERIVED FROM SCANNER READOUT (VIDEO IS SLAVED TO SCANNER)
- TORQUERS SINUSOIDALLY COMMUTATED TO MINIMIZE SYSTEM JITTER
- FLYWHEEL ENHANCES INERTIA OF HALF-ANGLE MIRROR TO MINIMIZE SYSTEM JITTER
- IN SCAN JITTER MAINLY A FUNCTION OF ASYNCHRONY BETWEEN MOTORS

TELESCOPE SERVO SYSTEM IS DIVIDED INTO MAJOR FUNCTIONAL BLOCKS

HUGHES

SANTA BARBARA RESEARCH CENTER
a subsidiary

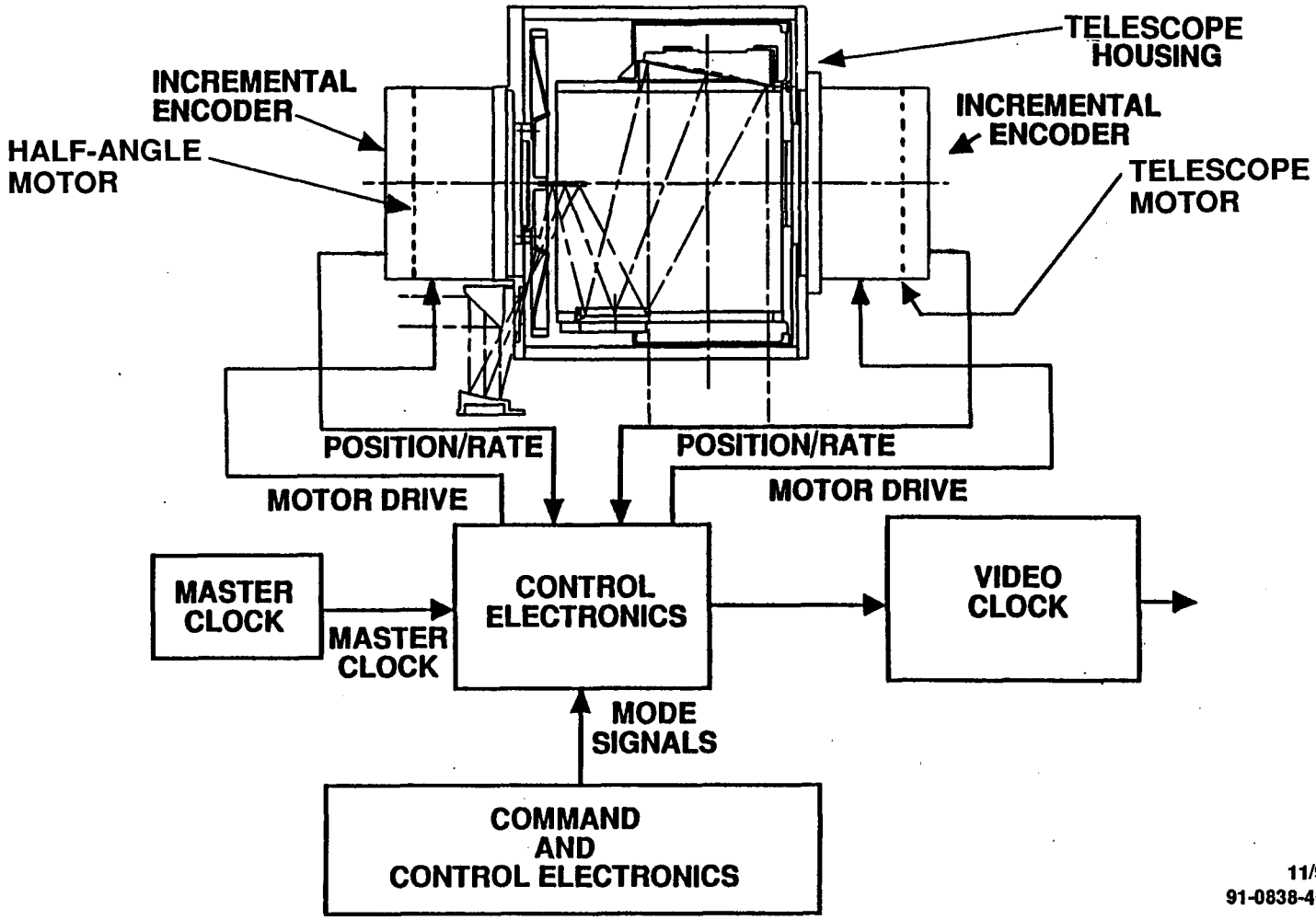

11/91
91-0838-406

SINUSOIDAL COMMUTATION IS USED TO MINIMIZE TORQUE RIPPLE IN SCAN MOTORS

HUGHES

SANTA BARBARA RESEARCH CENTER
a subsidiary

2-PHASE MOTOR

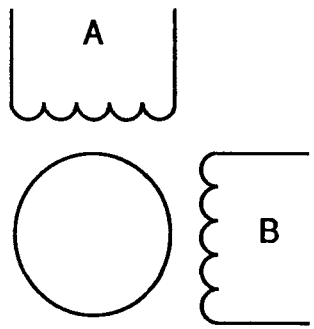

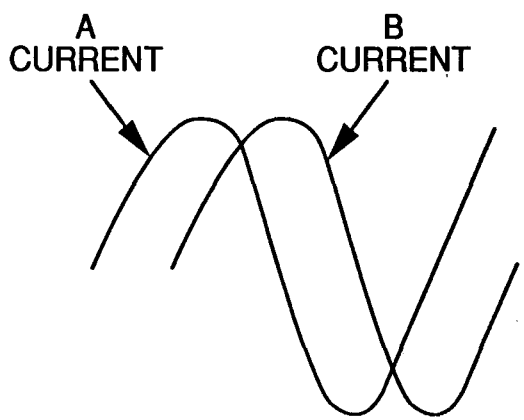

	WINDING A	WINDING B
DRIVING CURRENT WAVEFORM	SIN (Θ)	COS (Θ)
MOTOR TORQUE RESPONSE (IN.-OZ/A)	$K_T SIN(\Theta)$	$K_T COS(\Theta)$
TOTAL GENERATED TORQUE (IN.-OZ/A)	$K_T SIN^2(\Theta)$ +	$K_T COS^2(\Theta)$
	$= K_T$	

11/91
91-0838-407

IMPLEMENTATION OF TELESCOPE SERVO CONTROL IS CONCEPTUALLY STRAIGHTFORWARD

HUGHES

SANTA BARBARA RESEARCH CENTER
a subsidiary

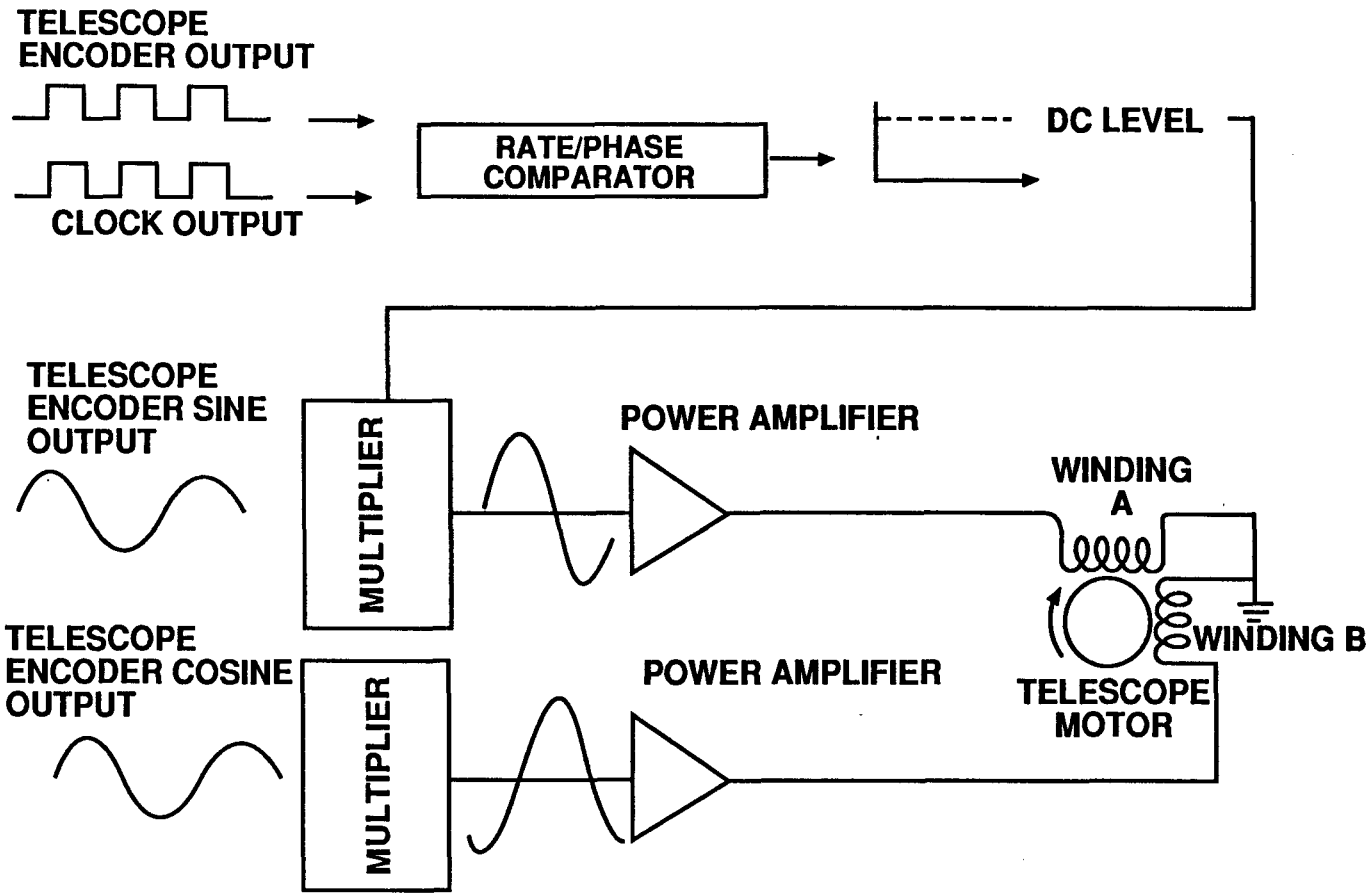

11/91
91-0838-407A

HALF ANGLE MOTOR IS SYNCHRONIZED TO TELESCOPE MOTOR USING A SIMILAR TECHNIQUE

HUGHES

SANTA BARBARA RESEARCH CENTER
a subsidiary

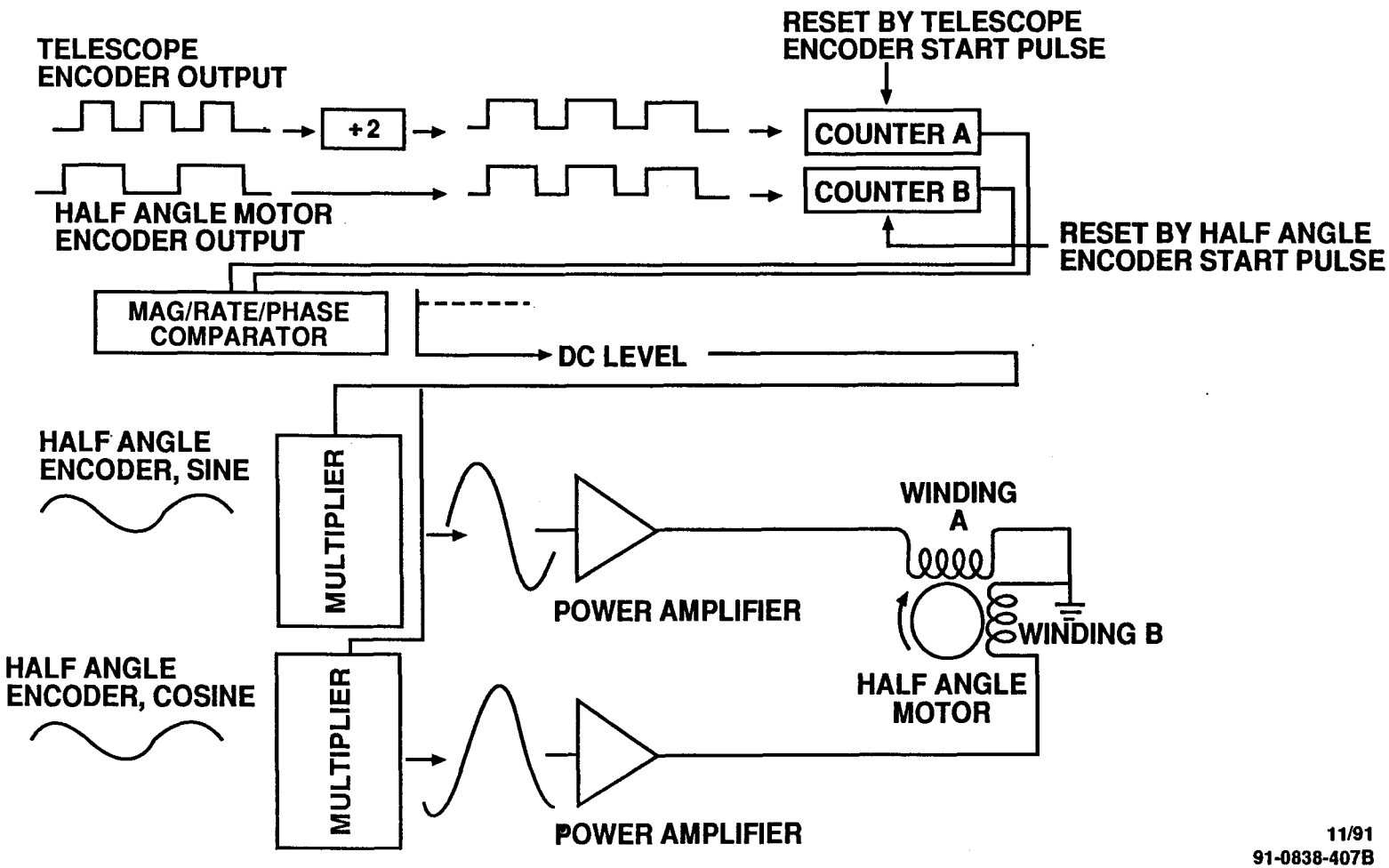

11/91
91-0838-407B

DUAL LOOP/DUAL INPUT IS THE CHOSEN DESIGN FOR EACH TELESCOPE SERVO

HUGHES

SANTA BARBARA RESEARCH CENTER
a subsidiary

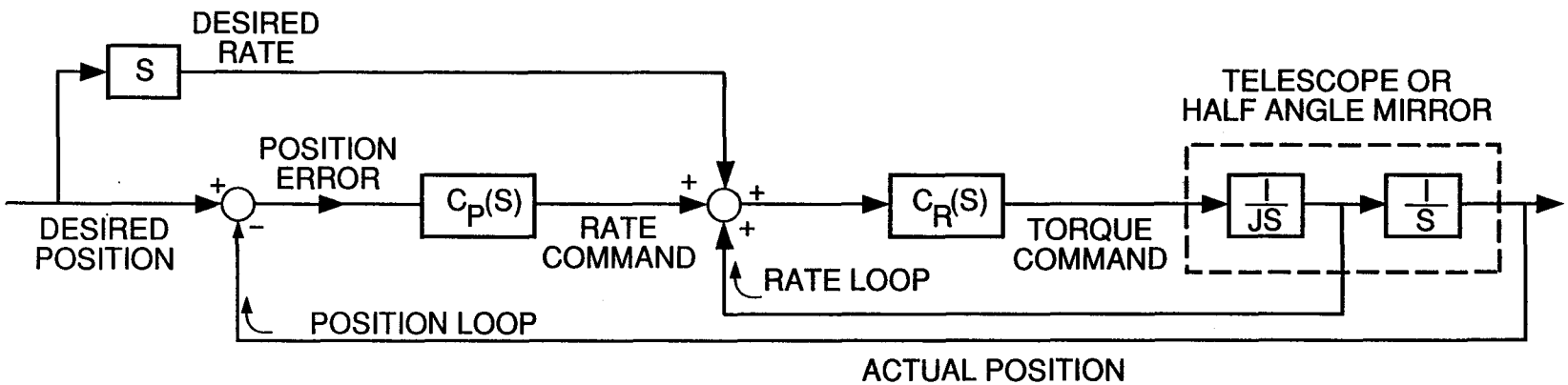

- FEEDING THE DESIRED RATE DIRECTLY INTO THE RATE LOOP MAKES THE SERVO RESPONSE FASTER—THIS FEATURE FACILITATES START-UP
- FEEDING THE DESIRED POSITION INTO THE POSITION LOOP MINIMIZES THE POSITION ERROR OR SYNCHRONIZATION ERROR

11/91
91-0838-407C

SERVO TYPE IS CHOSEN TO OPTIMIZE THE DESIRED CHARACTERISTICS

HUGHES

SANTA BARBARA RESEARCH CENTER
a subsidiary

ASYMPTOTIC ERROR

		TYPE OF INPUT*		
		UNIT STEP (C_O)	UNIT RAMP (C_1T)	UNIT PARABOLA (C_2T^2)
SERVO TYPE	O	CONSTANT OFFSET	LINEARLY INCREASING OFFSET A_1T	QUADRATICALLY INCREASING OFFSET
	I	ZERO	CONSTANT OFFSET	LINEARLY INCREASING OFFSET
	II	ZERO	ZERO	CONSTANT OFFSET

(*INPUTS TO THE TELESCOPE SERVO INCLUDE DRIVE CURRENT, TORQUE FLUCTUATIONS, ETC.)

SIMPLEST IMPLEMENTATIONS THAT WILL PERFORM ARE CHOSEN FOR THE TELESCOPE SERVOS

HUGHES

SANTA BARBARA RESEARCH CENTER
a subsidiary

- ROBUSTNESS OF SERVO *DECREASES* WITH *INCREASING* TYPE
- PERFORMANCE OF SERVO *INCREASES* WITH INCREASING TYPE
- CHOOSE MINIMUM TYPE TO DO THE JOB
- TELESCOPE SERVO MUST JUST MAINTAIN CONSTANT SPEED — TYPE ONE IS SUFFICIENT
- HALF ANGLE MIRROR SERVO MUST CATCH UP TO ANY IMPERFECTIONS IN THE TELESCOPE SERVO — TYPE TWO IS REQUIRED

SCAN SERVO BLOCK DIAGRAM ILLUSTRATES ANALYSIS NECESSARY TO GUARANTEE SMOOTH OPERATION

HUGHES

SANTA BARBARA RESEARCH CENTER
a subsidiary

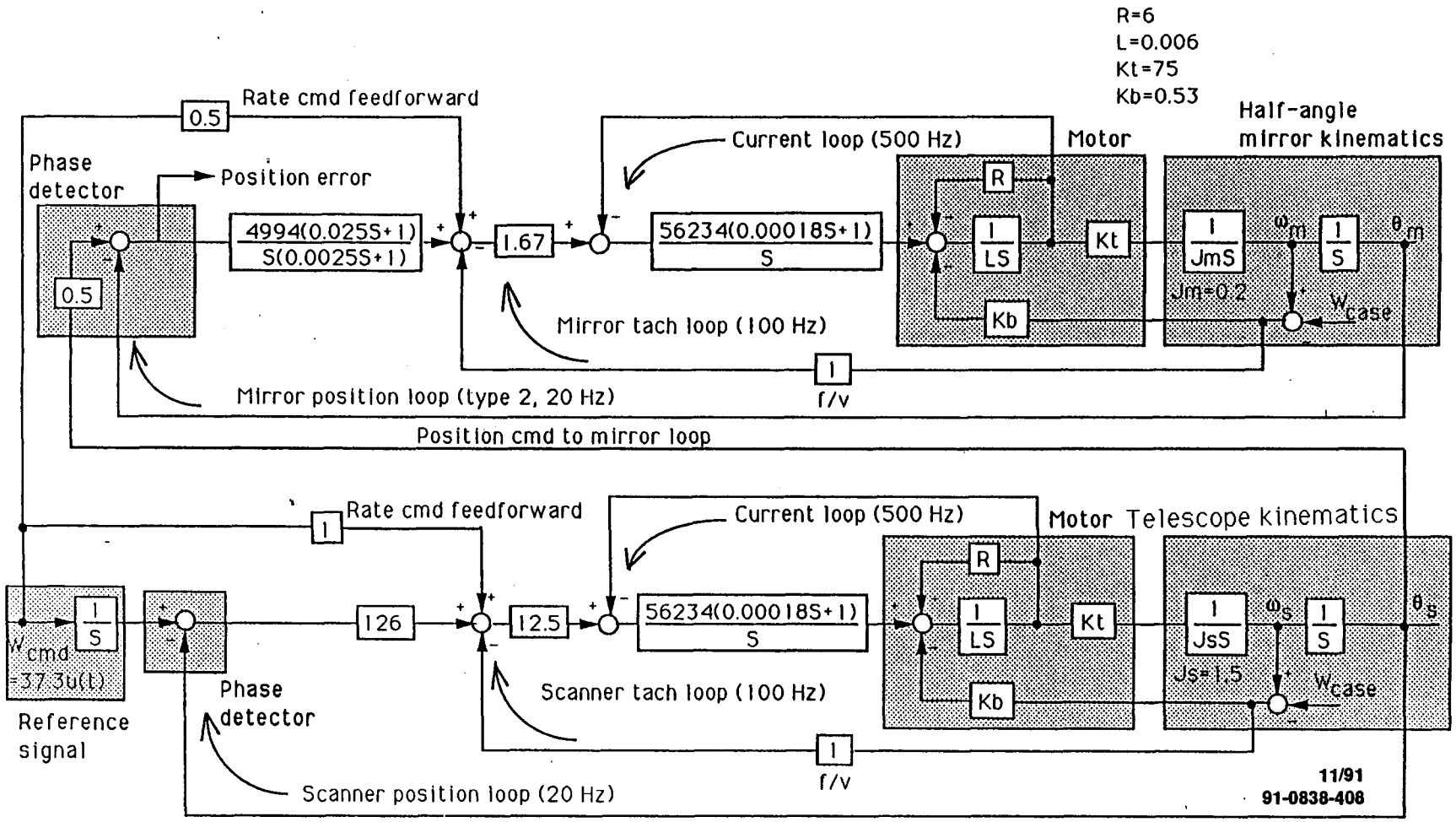

11/91
91-0838-408

SCANNER ELECTRONIC SCHEMATIC DISPLAYED IN ROADMAP FORM FOR VARIOUS CIRCUIT FUNCTIONS

HUGHES

SANTA BARBARA RESEARCH CENTER
a subsidiary

TOP LEVEL SCANNER ELECTRONIC SCHEMATIC

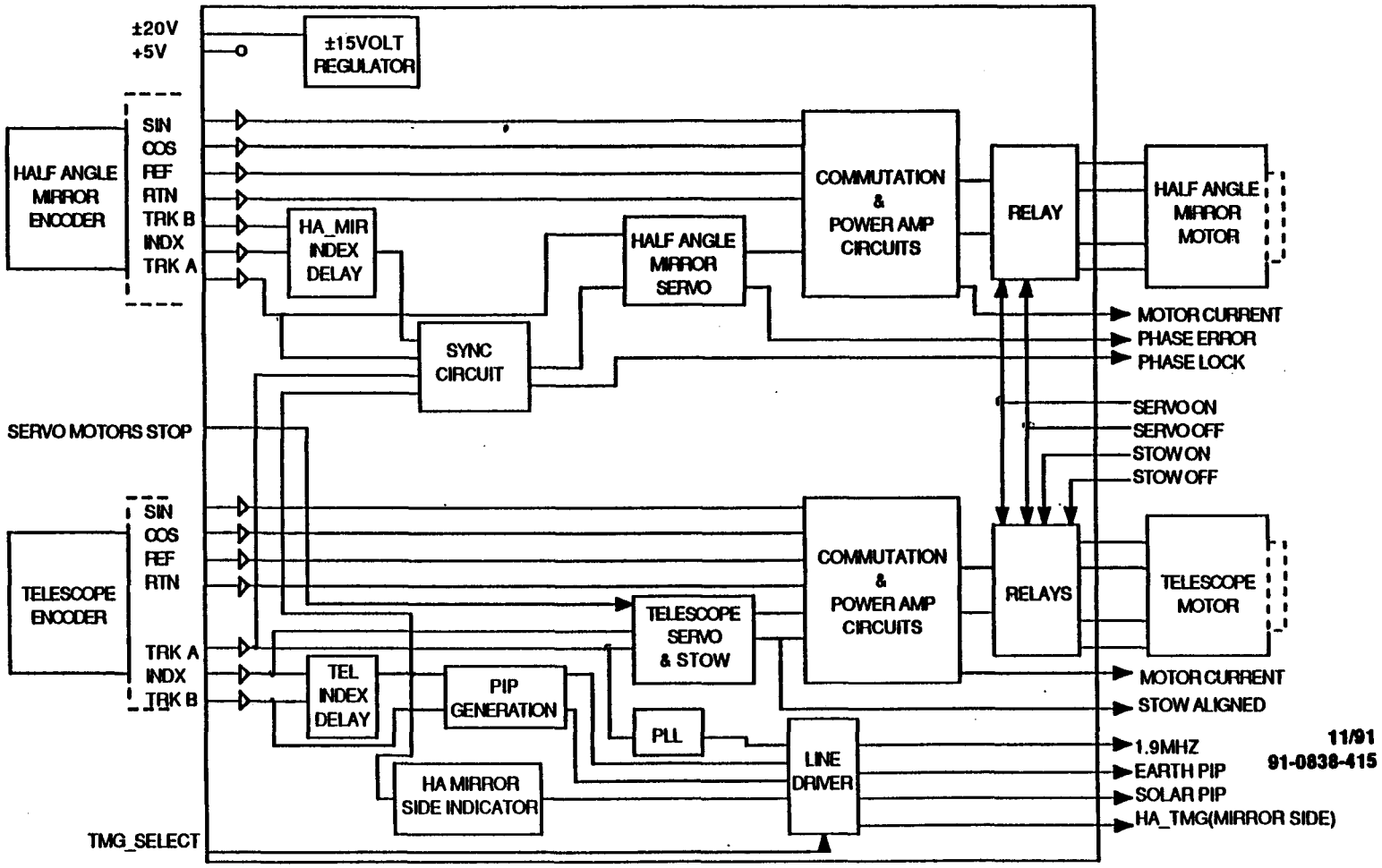

11/91
91-0838-415

SCAN ERROR IS DOMINATED BY VARIATIONS IN HALF ANGLE MOTOR BEARING DRAG

HUGHES

SANTA BARBARA RESEARCH CENTER
a subsidiary

POSITION / TACH LOOP ATTENUATION OF TORQUE DISTURBANCE

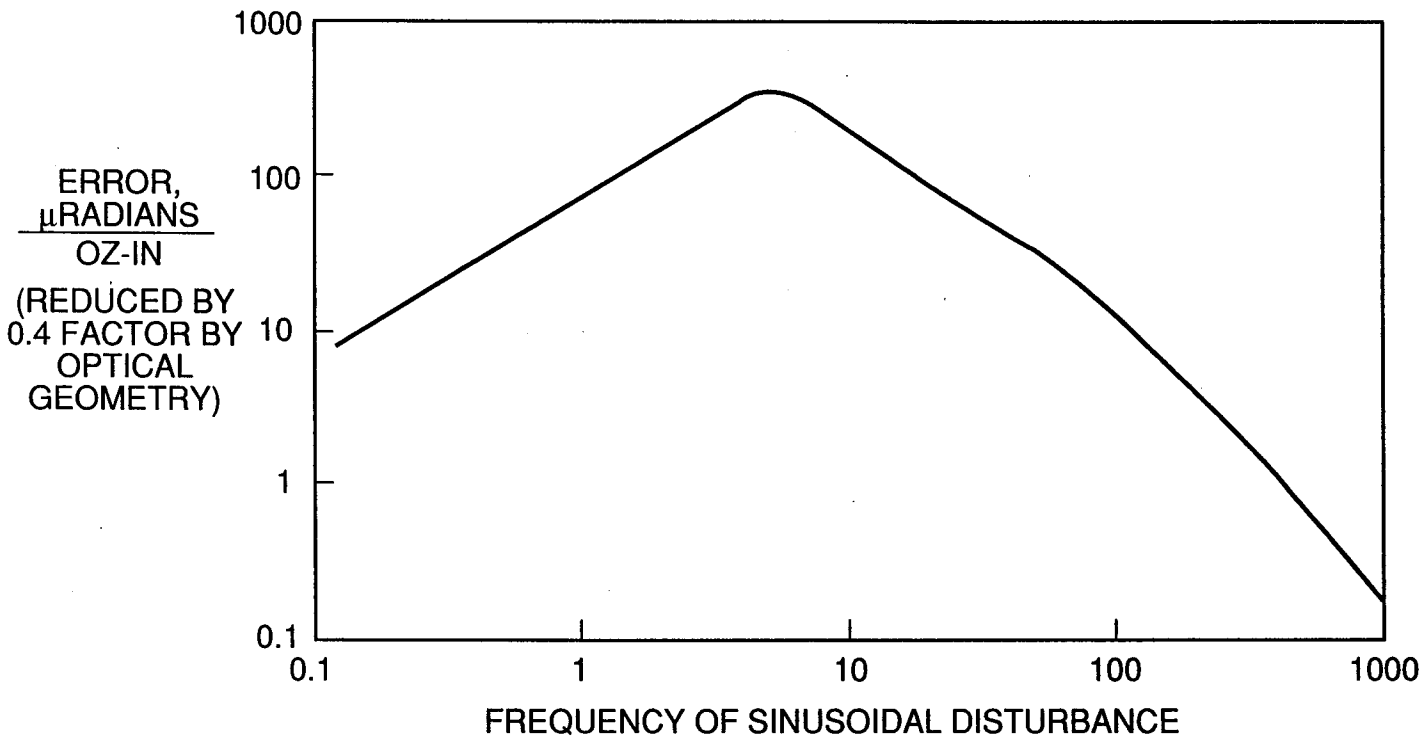

11/91
91-0838-415A

TORQUE MARGIN IS ALSO DOMINATED BY BEARING DRAG; ADEQUATE MARGIN EXISTS

HUGHES

SANTA BARBARA RESEARCH CENTER
a subsidiary

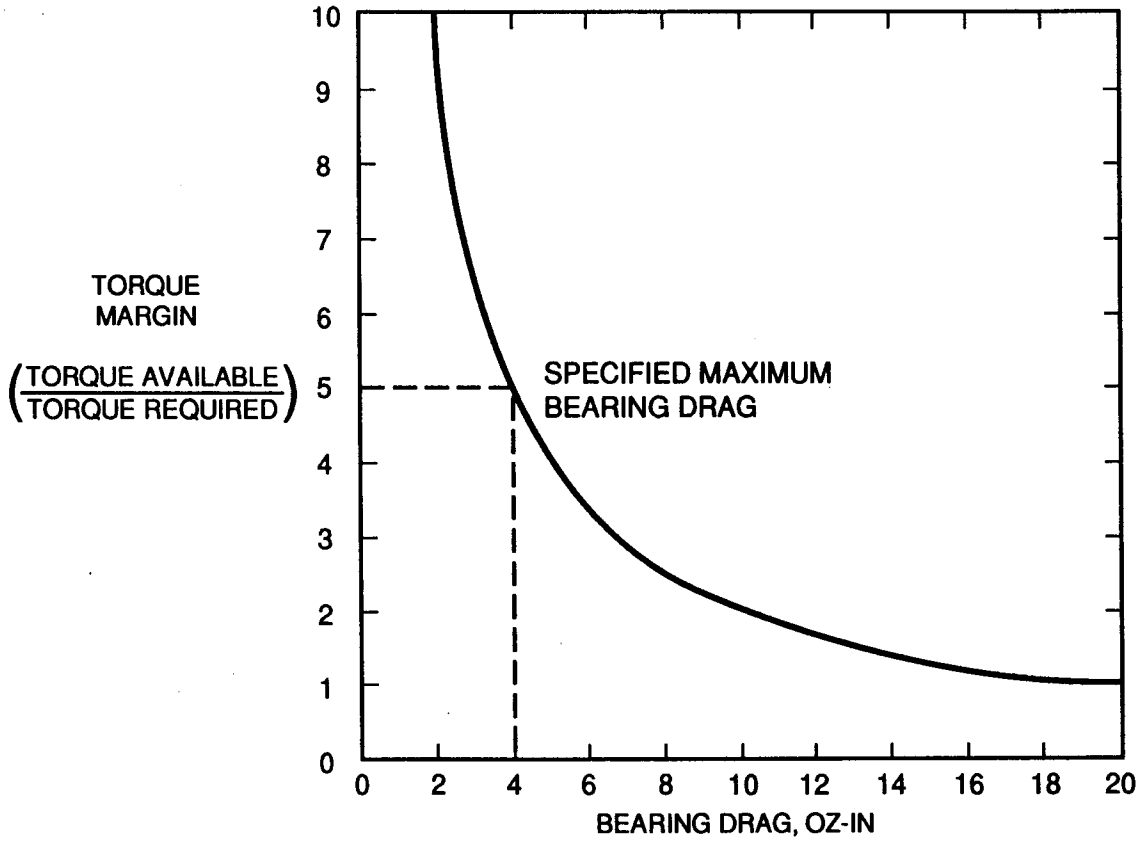

TORQUE MARGIN IS INDEPENDENT OF ANGULAR VELOCITY (APPROXIMATELY)

11/91
91-0838-415B

ANALYSIS AND TEST SHOW WINDLOAD IS SMALL

HUGHES

SANTA BARBARA RESEARCH CENTER
a subsidiary

- SCANNER DESIGN IS OPTIMIZED FOR SPACE OPERATION
- OPERATION IN AIR DESIRED FOR EASE OF INTEGRATION AND CALIBRATION
- EARLY BACK- OF-THE-ENVELOPE CALCULATIONS INDICATED WINDLOAD COULD CAUSE TORQUE AND THERMAL PROBLEMS
- DETAILED CALCULATIONS OF WINDLOAD AND EXPERIMENT WITH 7/8 SCALE MODEL CONFIRMED WINDLOAD IS LESS THAN 0.5 IN.-OZ (NO PROBLEM)

STOW SCHEME UTILIZES INPUT COMMANDS AND OUTPUT TELEMETRY FOR STOW PROCESS

HUGHES

SANTA BARBARA RESEARCH CENTER
a subsidiary

- UPON RECEIPT OF "SERVO MOTORS STOP" CMD, TELESCOPE POSITION LOOP IS OPENED, RATE LOOP COMMANDED TO 1 RAD/SEC RATE
- WHEN THE RATE IS BELOW THRESHOLD *AND* THE INDEX PULSE APPEARS, INPUTS TO THE POWER AMPS ARE SWITCHED TO INJECT A HOLDING CURRENT IN ONE WINDING AND SHORT THE OTHER WINDING
- A "STOW ALIGNED" TELEMETRY SIGNAL IS TRANSMITTED "TRUE"
- UPON RECEIPT OF "STOW ON" CMD, RELAY SWITCHES TO 28V SPACECRAFT POWER TO PROVIDE HOLDING CURRENT INTO WINDING. POWER TO SERVO ELECTRONICS IS DISABLED
- TO RETURN TO SCAN OPERATION, EITHER A "STOW OFF" OR "SERVO ON" CMD WILL RESET ALL STOW CIRCUITRY TO AWAIT RECEIPT OF "SERVO MOTORS STOP" CMD

TILT MECHANISM CONTROL

- REQUIREMENTS
- PHILOSOPHY
- DESIGN
- PERFORMANCE

TILT MECHANISM REQUIREMENTS HAVE BEEN FLOWED DOWN TO THE CONTROLLER

HUGHES

SANTA BARBARA RESEARCH CENTER
a subsidiary

• TILT POSITIONS	0°, +20°, AND –20° RELATIVE TO NADIR
• CRANK SHAFT POSITION ACCURACY	±0.5° EACH SHAFT
• TRANSIT TIME	13 SECONDS MAX FROM ANY POSITION TO ANY OTHER POSITION
• POWER AT REST	MINIMIZE
• CABLE WIND UP	NOT ALLOWED

TILT CONTROL PHILOSOPHY

HUGHES

SANTA BARBARA RESEARCH CENTER
a subsidiary

- SINCE THE TELESCOPE IS ONLY REQUIRED TO POINT PRECISELY AT THREE LOCATIONS, THE STRUCTURE IS DESIGNED SO THAT AT THESE THREE POSITIONS THE TILT ANGLE IS INSENSITIVE TO THE TILT CONTROL AND ANY MISALIGNMENT

- SINCE ONLY COARSE CONTROL IS NECESSARY, THE CHOSEN CONTROL SCHEME SHOULD BE AS SIMPLE AS POSSIBLE

TILT MECHANISM EASILY ACHIEVES ITS REQUIRED ACCURACY

HUGHES

SANTA BARBARA RESEARCH CENTER
a subsidiary

- TELESCOPE ATTITUDE SENSITIVITY EVALUATED AROUND ONE OF ITS "TOP DEAD CENTER" OPERATING POINTS ILLUSTRATES LOCAL INSENSITIVITY OF OUTPUT TILT ANGLE TO INPUT MOTOR ANGLE

THETA SENSITIVITY EVALUATED AROUND THETA OF 75 DEGREES

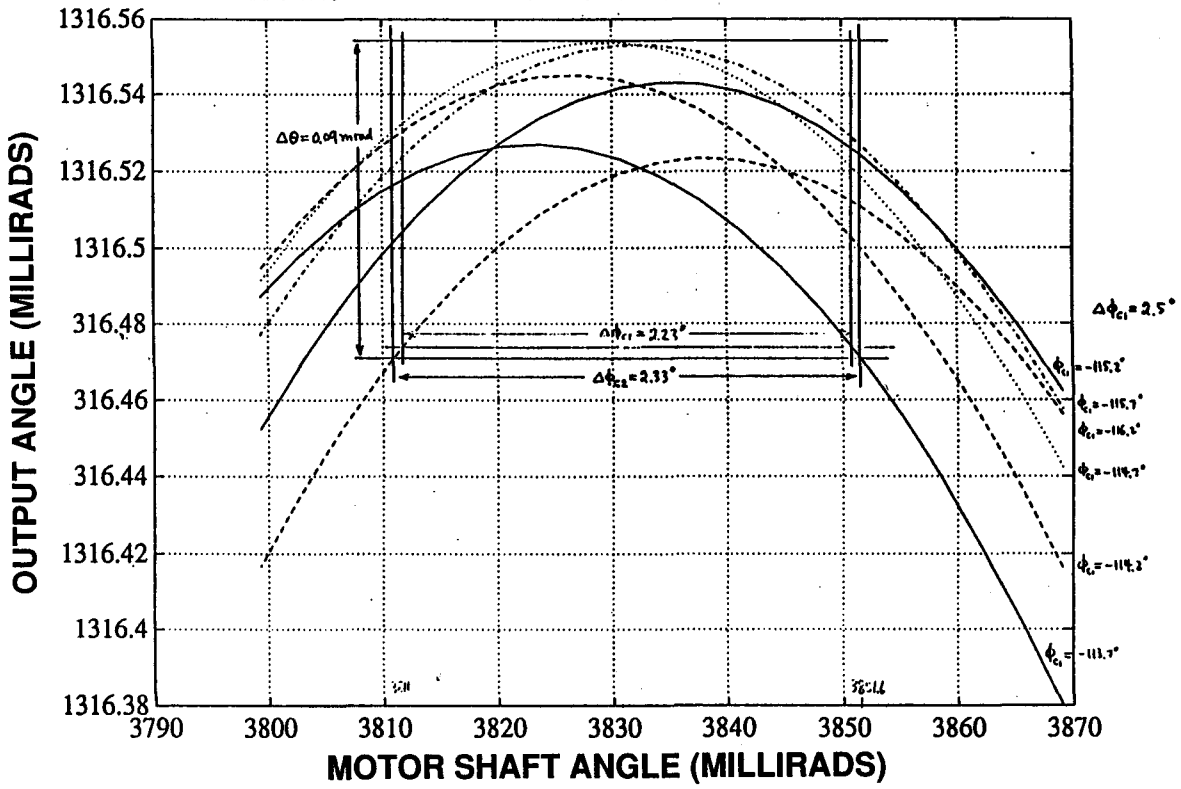

11/91
91-0838-426

DESIGN USING CLEVER LINK MECHANISM SIMPLIFIES SERVO

HUGHES

SANTA BARBARA RESEARCH CENTER
a subsidiary

- UTILIZES TWO STEPPER MOTORS WITH LARGE GEAR RATIO TO MINIMIZE SENSITIVITY TO VARIABLE DRIVEN INERTIA
- LOGIC IMPLEMENTED TO PROHIBIT CABLE WRAP UP
- A RESOLVER IS USED TO DETERMINE EACH MOTOR'S POSITION AND CLOSE THE LOOP
- UTILIZE SIMPLE CONSTANT SPEED CONTROLLER WITH DEADBAND TO ELIMINATE CHATTER
- LARGE GEAR RATIO AND COGGING TORQUE ALLOWS REMOVAL OF POWER

TELESCOPE REPOSITIONS IN LESS THAN 13 SECONDS

HUGHES

SANTA BARBARA RESEARCH CENTER
a subsidiary

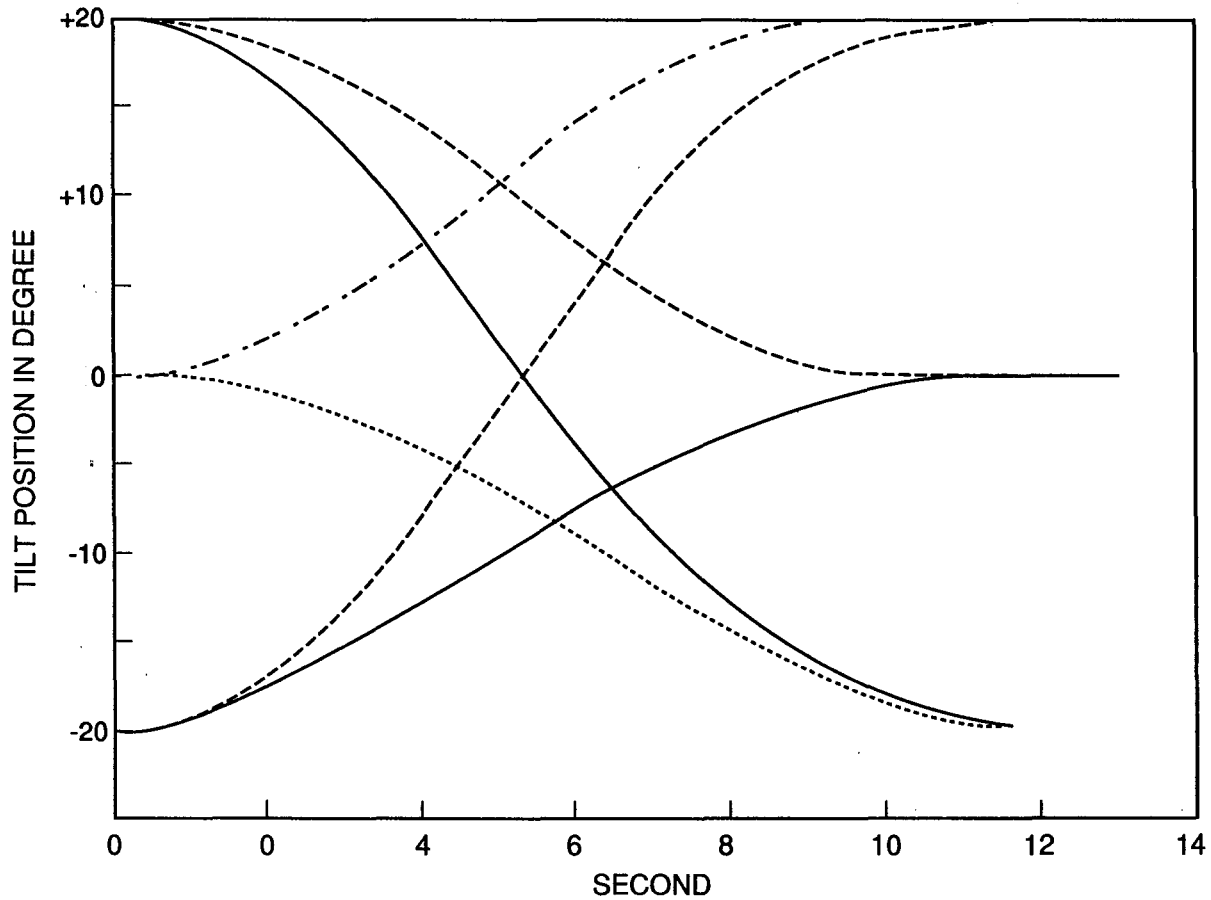

11/91
91-0838-426A

TILT ELECTRONICS UTILIZES GATE ARRAY TO SIMPLIFY DESIGN AND MINIMIZE PART COUNT

HUGHES
SANTA BARBARA RESEARCH CENTER
a subsidiary

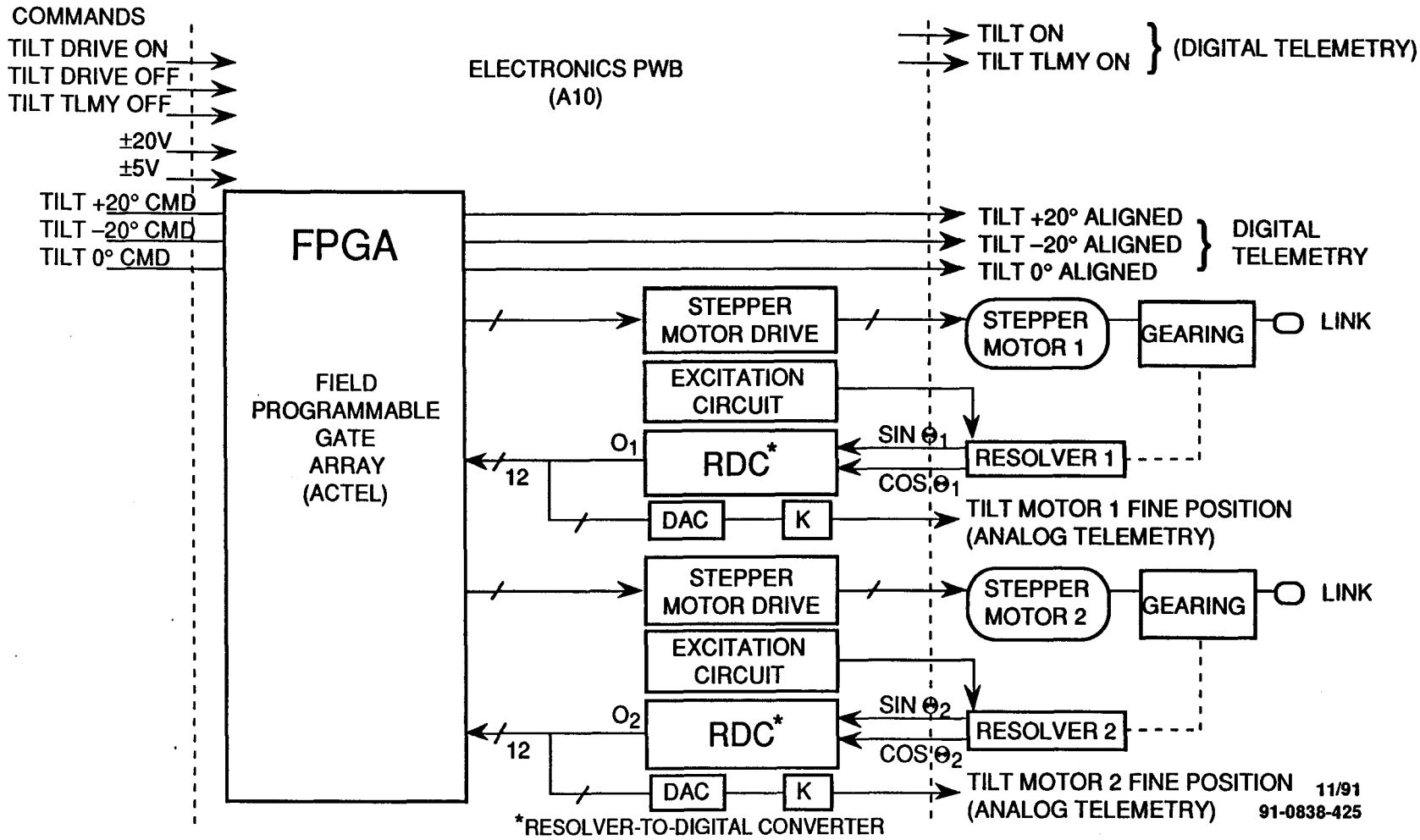

11/91
91-0838-425

TILT TRANSFER POLICY IS TO RUN MOTORS BACK AND FORTH TO AVOID CABLE WINDUP

HUGHES

SANTA BARBARA RESEARCH CENTER
a subsidiary

- CONTROLLING c1 AND c2 TO ACHIEVE Θ OF –20, 0, OR +20 DEGREES

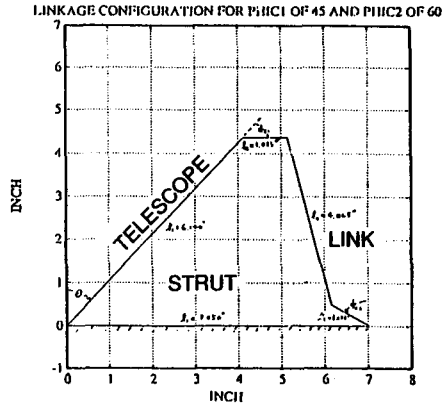

- TRANSFER POLICY

CONTROL STRATEGY FOR SeaWiFS TILT MECHANISM			
FROM	–20°	0°	20°
–20°	NA	$\Delta c1 = -18°$ $\Delta c2 = +177°$	$\Delta c1 = +136°$ $\Delta c2 = +185°$
0°	$\Delta c1 = +18°$ $\Delta c2 = -177°$	NA	$\Delta c1 = +154°$ $\Delta c2 = +8°$
20°	$\Delta c1 = -136°$ $\Delta c2 = -185°$	$\Delta c1 = -154°$ $\Delta c2 = -8°$	NA

11/91
91-0838-426AB

ANGULAR MOMENTUM COMPENSATOR

- REQUIREMENTS
- PHILOSOPHY
- DESIGN

ANGULAR MOMENTUM COMPENSATION REQUIREMENTS ARE EASY TO MEET

HUGHES

SANTA BARBARA RESEARCH CENTER
a subsidiary

• RESIDUAL ANGULAR MOMENTUM ABOUT SCAN AXIS	<1 IN.-OZ-SEC (2% OF SCANNER)
• LIFETIME	>5 YEARS

11/91
91-0838-428

ANGULAR MOMENTUM COMPENSATOR WILL BE PURCHASED AS A UNIT

HUGHES

SANTA BARBARA RESEARCH CENTER
a subsidiary

- ANGULAR MOMENTUM ADJUSTED BY
  - A. TRIMMING FLYWHEEL INERTIA
  - B. TRIMMING FLYWHEEL SPEED
- MOTOR EFFICIENCY IS LIMITED BY VOLTAGE SUPPLY (±21 VOLTS)
- MOTOR WILL BE DRIVEN OPEN LOOP

ANGULAR MOMENTUM MOTOR USES SIMPLE OPEN LOOP, SYNCHRONOUS DRIVE ELECTRONICS

HUGHES

SANTA BARBARA RESEARCH CENTER
a subsidiary

ANGULAR MOMENTUM CONTROLLER BLOCK DIAGRAM

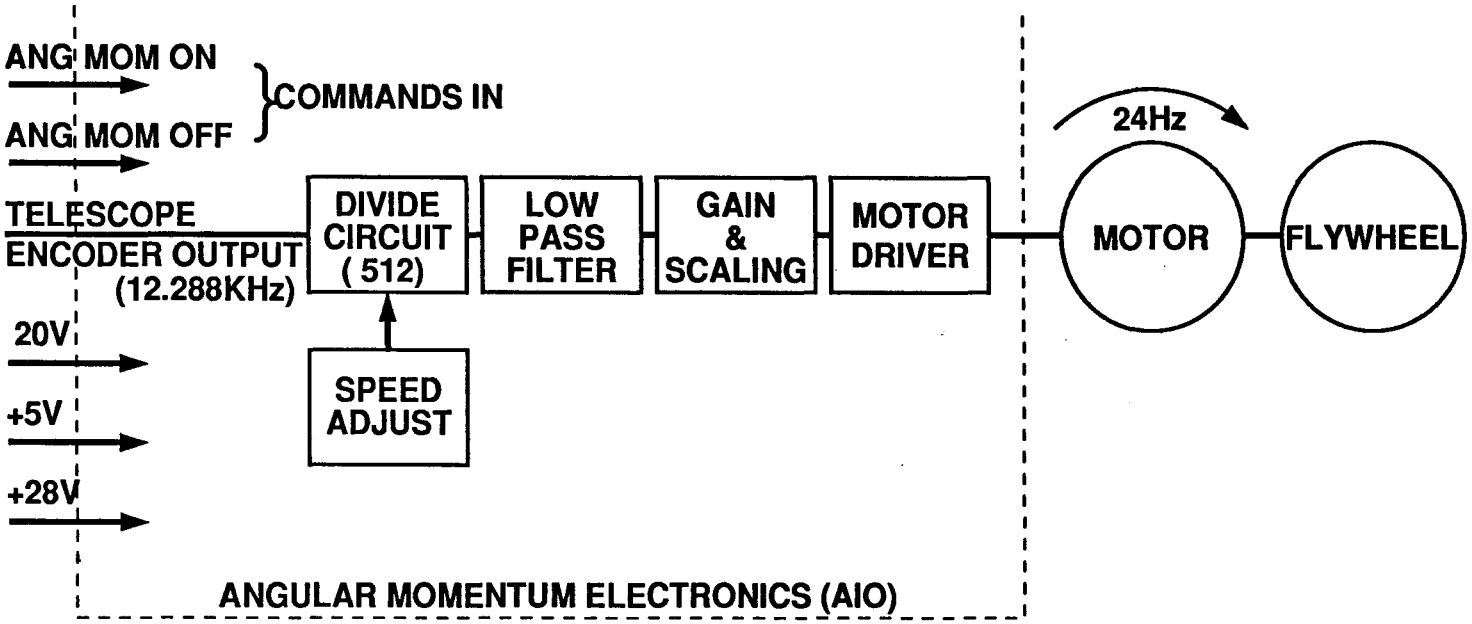

11/91
91-0838-430

SERVO DESIGN OPTIMIZED FOR MINIMUM POWER

HUGHES

SANTA BARBARA RESEARCH CENTER
a subsidiary

	MAX	TYP
SCANNER	14.8W	13.6W
STOW	1.5W	0.54W
TILT	TBD*	TBD*
ANG/MOM	TBD*	TBD*
TOTAL	--	--
ALLOTTED	--	--
RESERVE	--	--

*PENDING SELECTION OF MOTORS

CONTROLLER DESIGNS ARE READY TO BE FABRICATED

HUGHES

SANTA BARBARA RESEARCH CENTER
a subsidiary

- SCAN CONTROLLER CIRCUIT DESIGNS COMPLETE
- SCAN BRASSBOARD ASSEMBLED AND IN TEST
- TILT CONTROLLER CIRCUIT DESIGN COMPLETE
- TILT CONTROLLER BRASSBOARD COMPLETE
- ANGULAR MOMENTUM COMPENSATOR CONTROLLER CONSIDERED NO RISK; NO BRASSBOARD INTENDED

ELECTRONIC DESIGN

DAVE ROGERS

11/91
91-0838-500

SeaWiFS CDR
ELECTRONICS DESIGN

HUGHES

SANTA BARBARA RESEARCH CENTER
a subsidiary

- OVERVIEW
- FOCAL PLANE ASSEMBLY
  - DETECTOR ARRAYS
  - FPA/TIA PACKAGE
  - PREAMP ELECTRONICS
  - BREADBOARD/POD STATUS
- ELECTRONICS MODULE — CIRCUIT TRADE STUDIES
  - POSTAMPLIFIERS
  - TIMING
  - SERVO DRIVES
  - COMMAND AND TELEMETRY
  - POWER SUPPLY
  - EDU/BREADBOARD STATUS
- CIRCUIT CARD TESTING

SeaWiFS INSTRUMENT

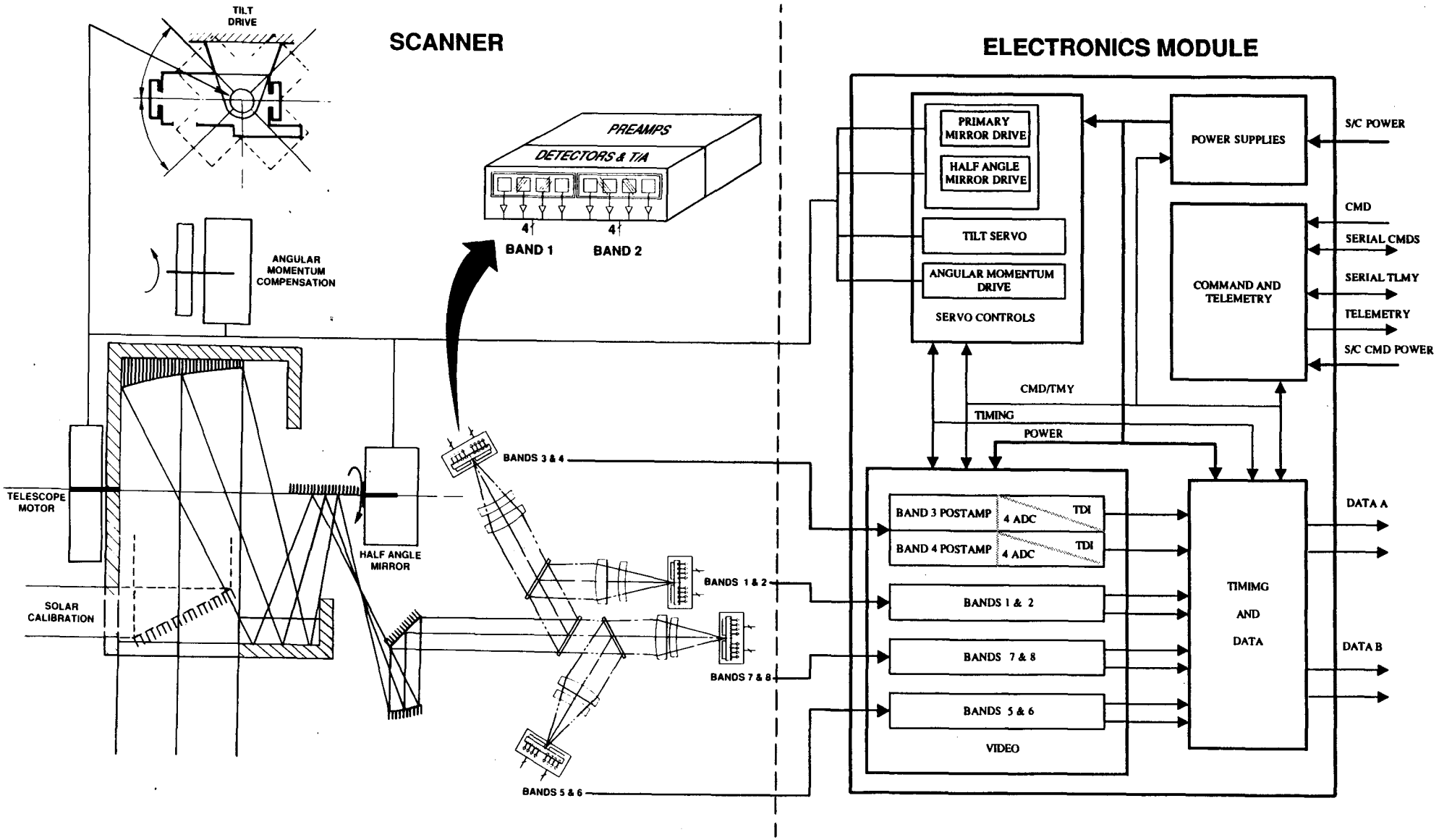

11/91
91-0838-500B

SeaWiFS System Electronics Interconnect Diagram

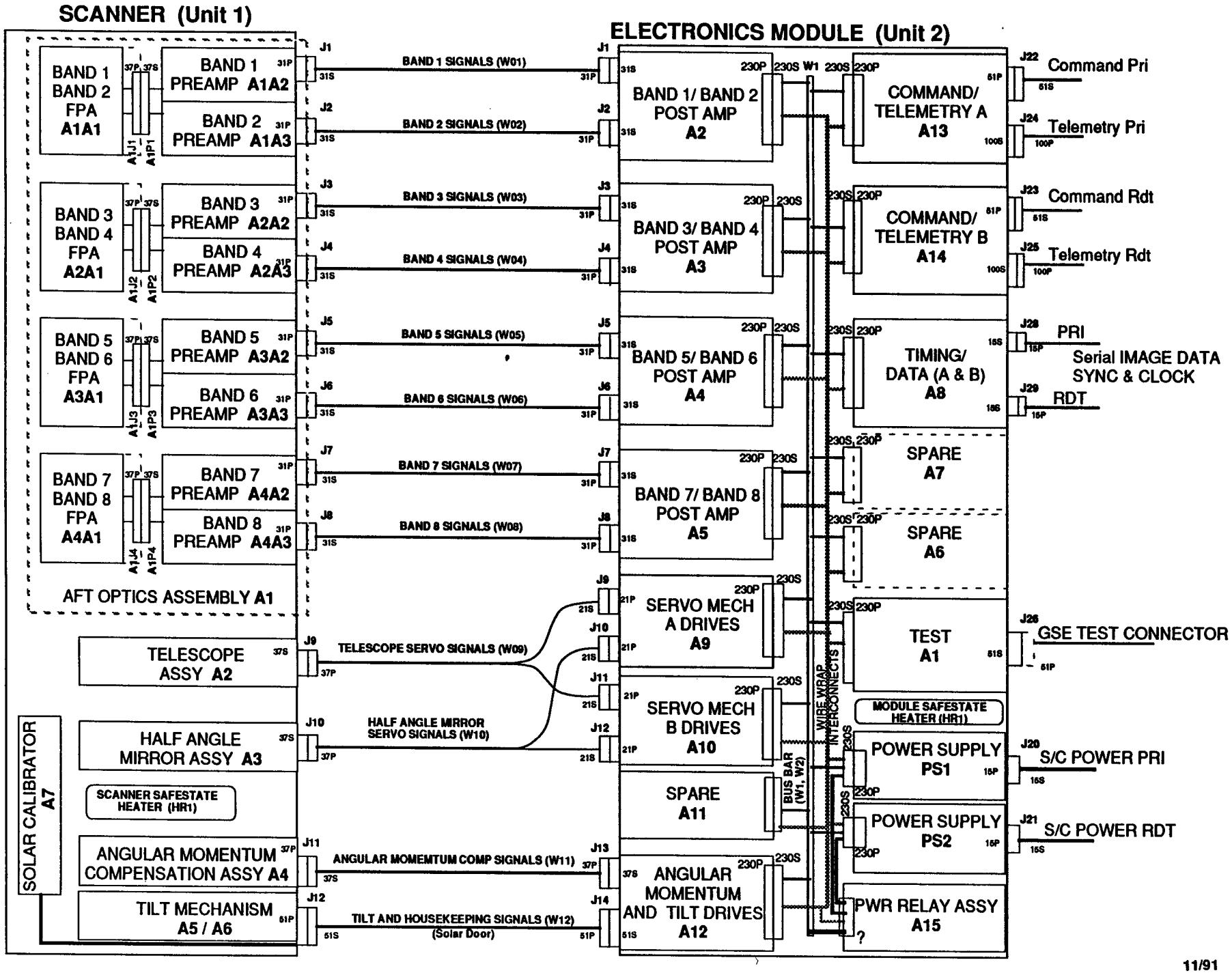

11/91
91-0838-501

SIGNAL PATH
FROM PHOTON TO BIT

11/91
91-0838-503

VIDEO SIGNAL PATH

HUGHES

SANTA BARBARA RESEARCH CENTER
a subsidiary

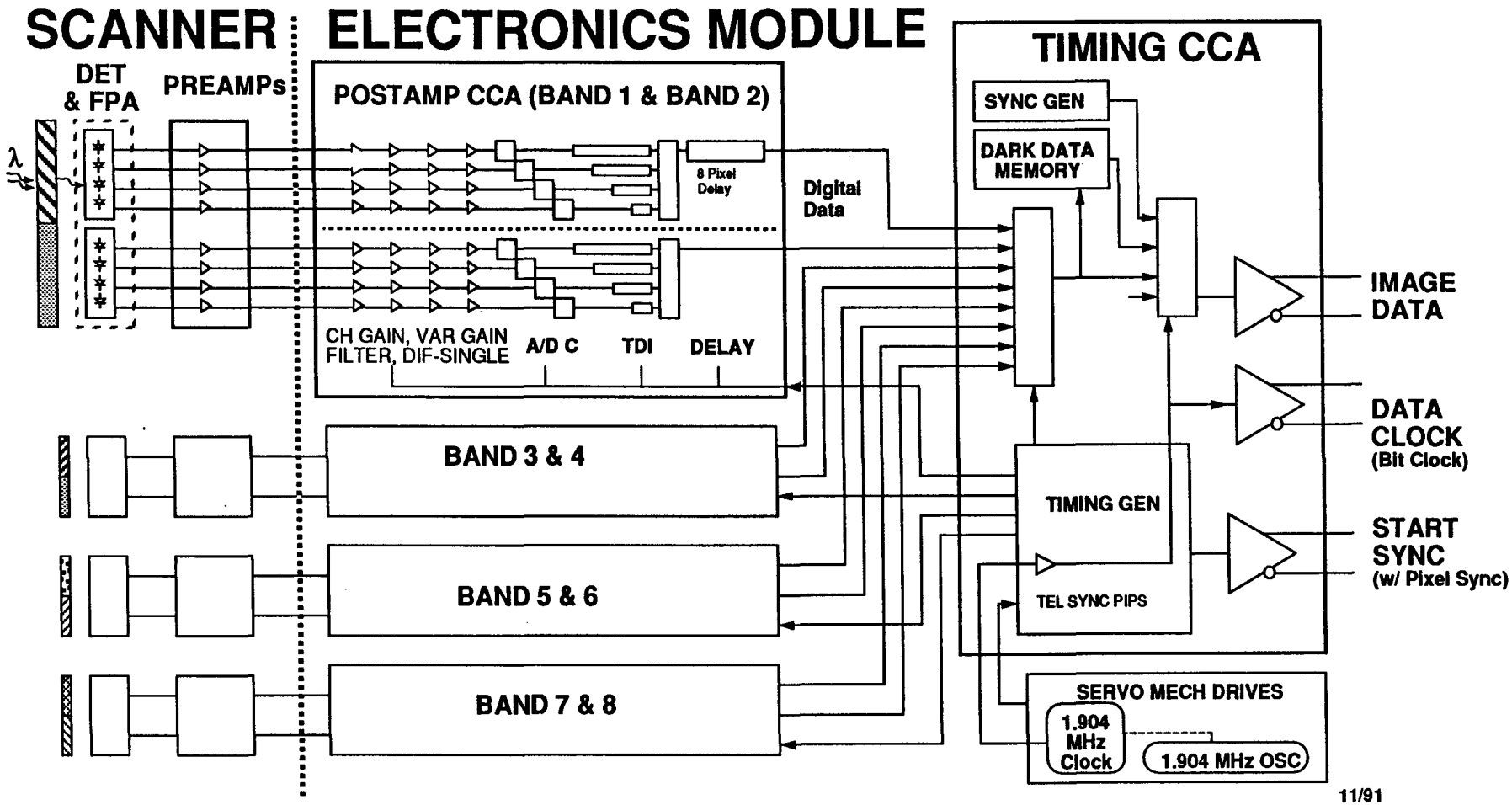

11/91
91-0838-504

2:1

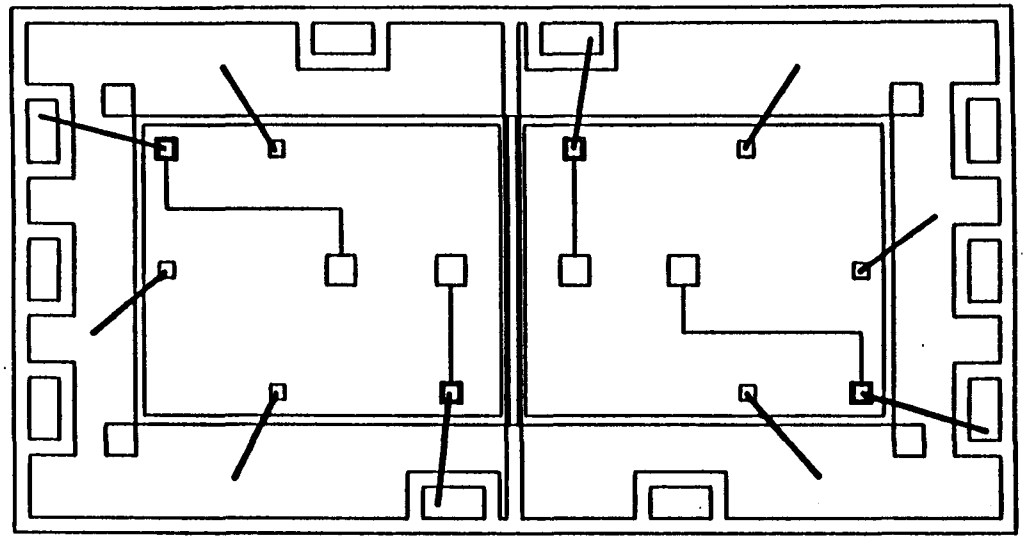

4:1

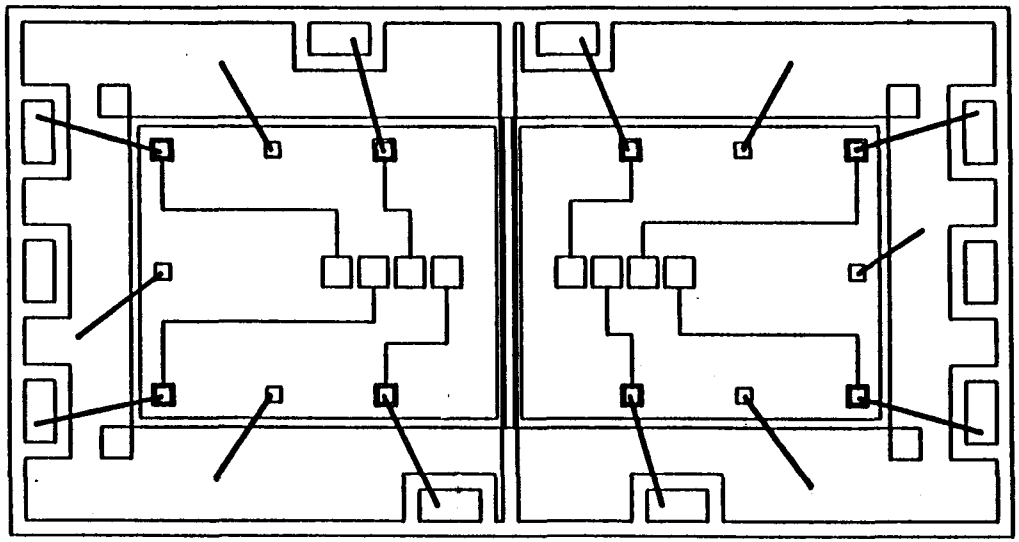

HUGHES

SANTA BARBARA RESEARCH CENTER
a subsidiary

SILICON DETECTORS ARE BEING FABRICATED TO IMPLEMENT 4:1 AND 2:1 TDI

SeaWiFS™

11/91
91-0838-505

PARTITIONING OF DETECTOR/PREAMP ELECTRONICS

HUGHES

SANTA BARBARA RESEARCH CENTER
a subsidiary

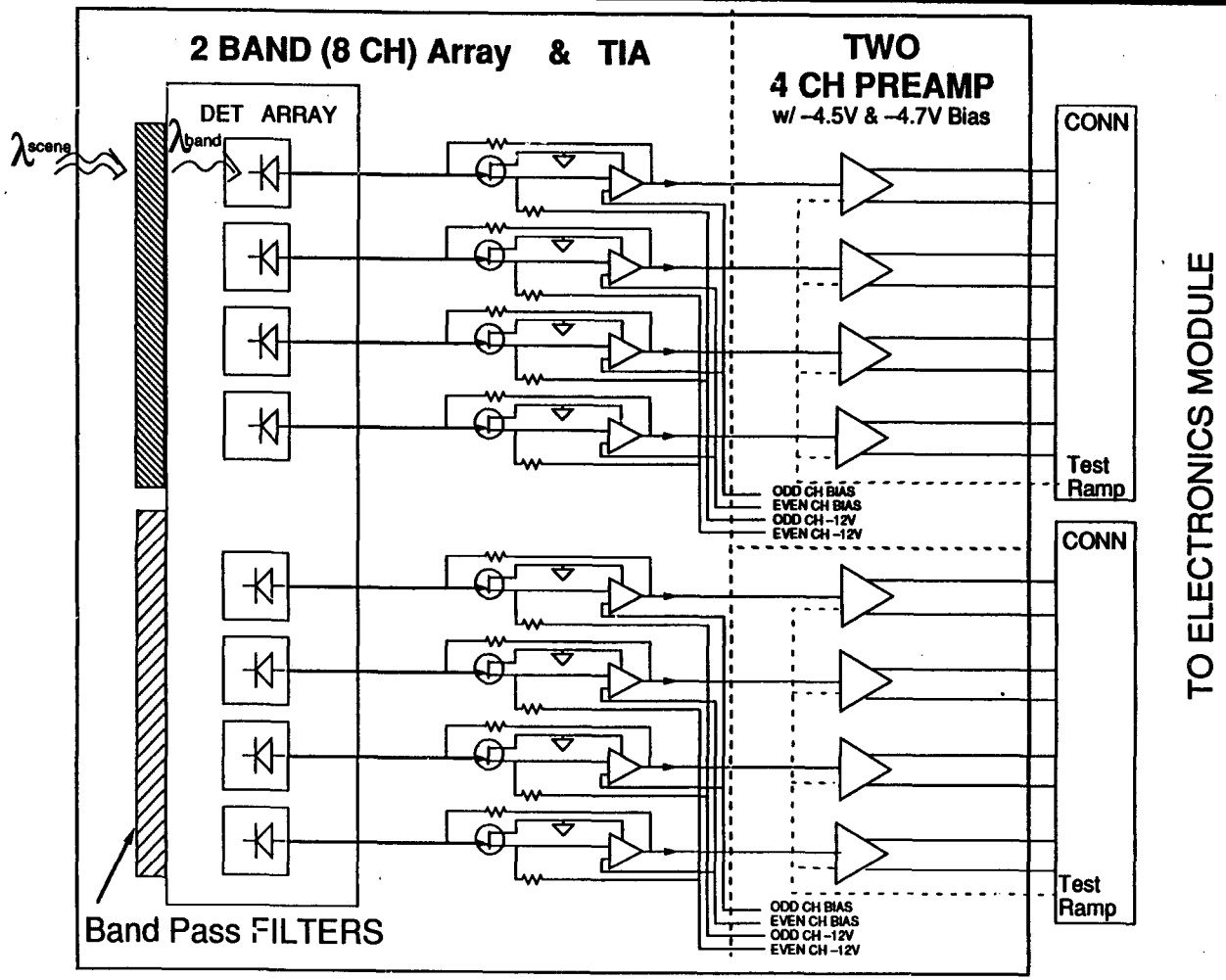

11/91
91-0838-506

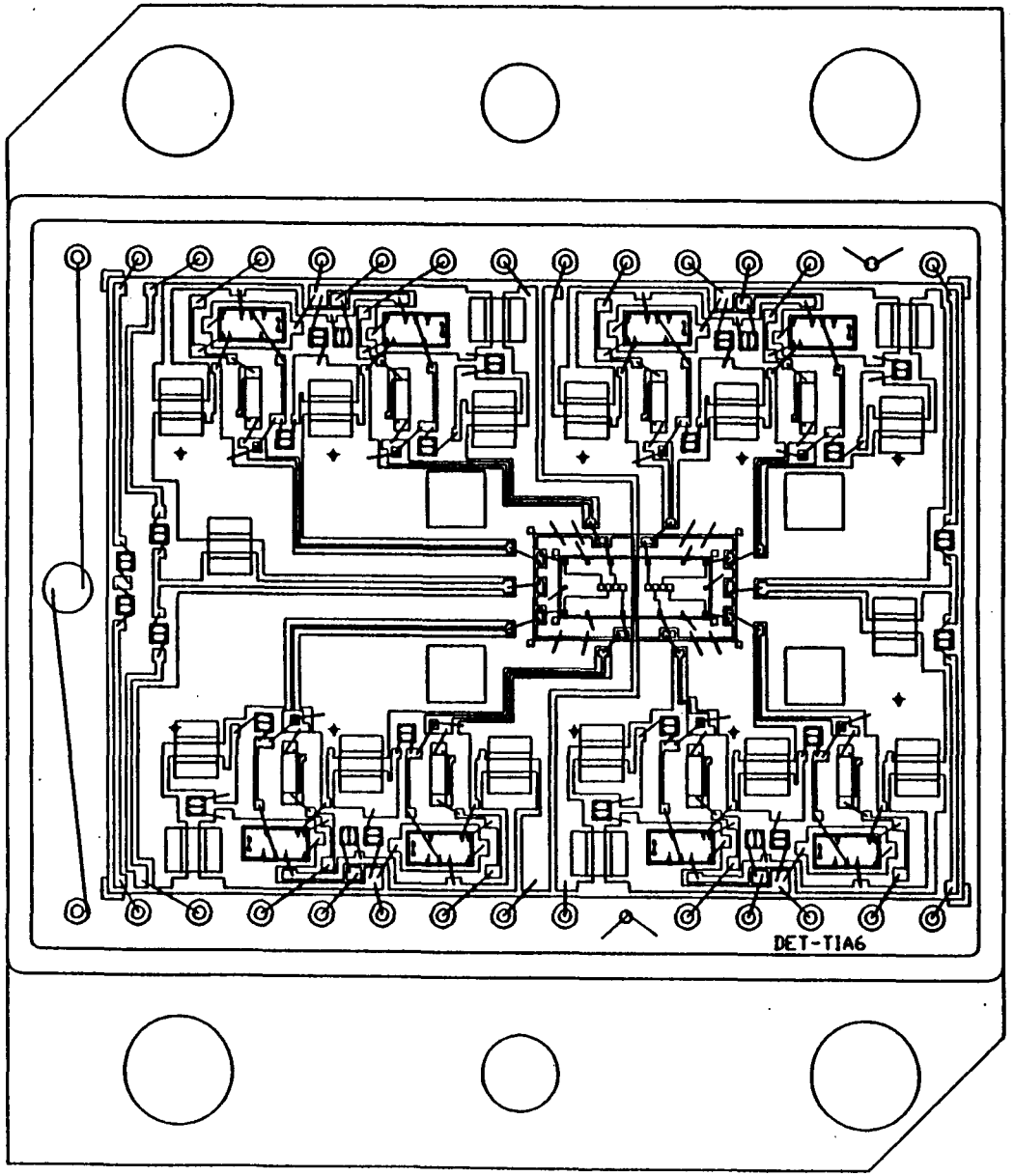

HUGHES

SANTA BARBARA RESEARCH CENTER
a subsidiary

FOCAL PLANE ASSEMBLY

11/91
91-0838-507

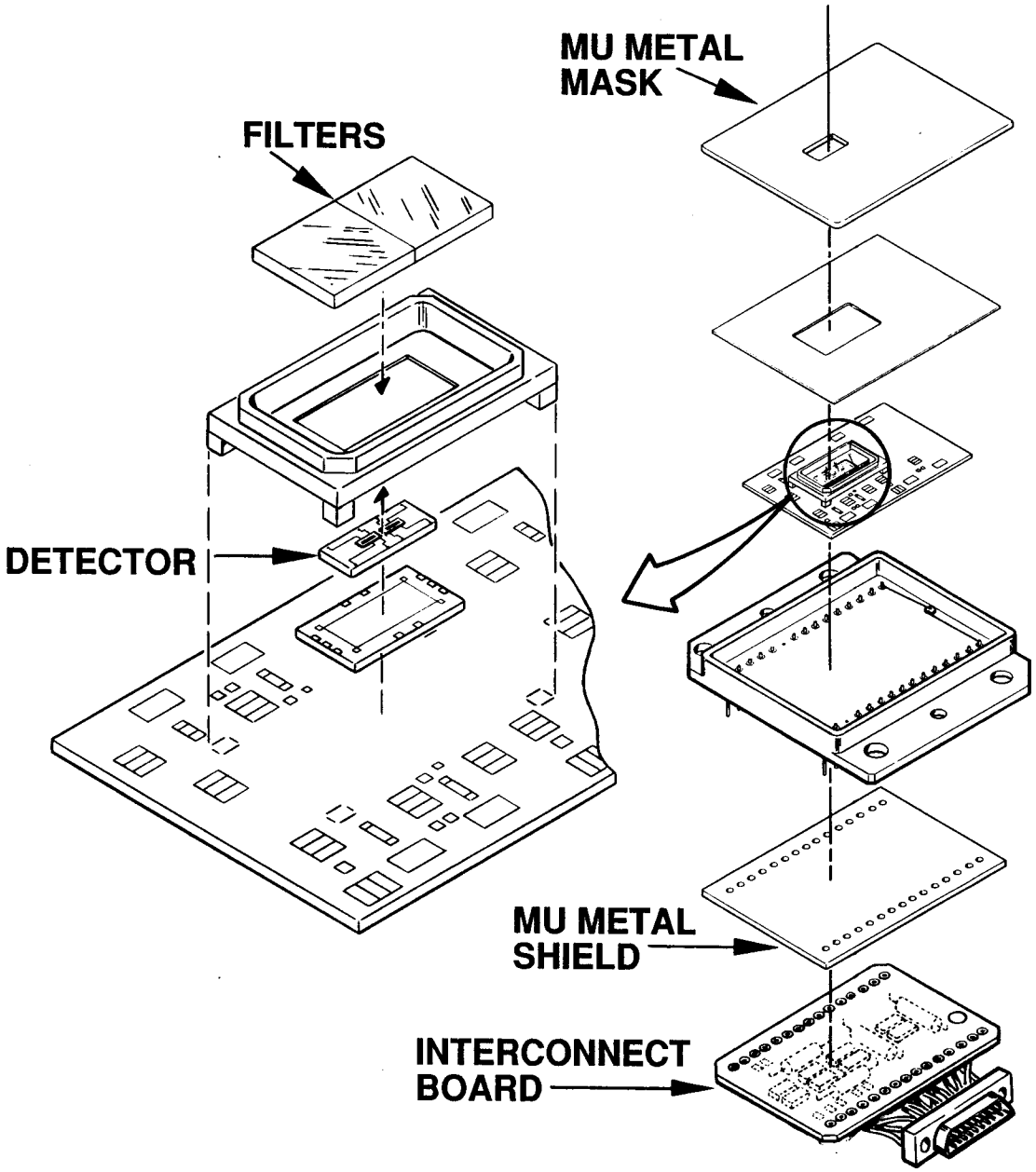

HUGHES

SANTA BARBARA RESEARCH CENTER
a subsidiary

EXPLODED VIEW OF FPA ASSEMBLY

SeaWiFS™

11/91
91-0838-507A

TIA NOISE VERSUS FREQUENCY

HUGHES

SANTA BARBARA RESEARCH CENTER
a subsidiary

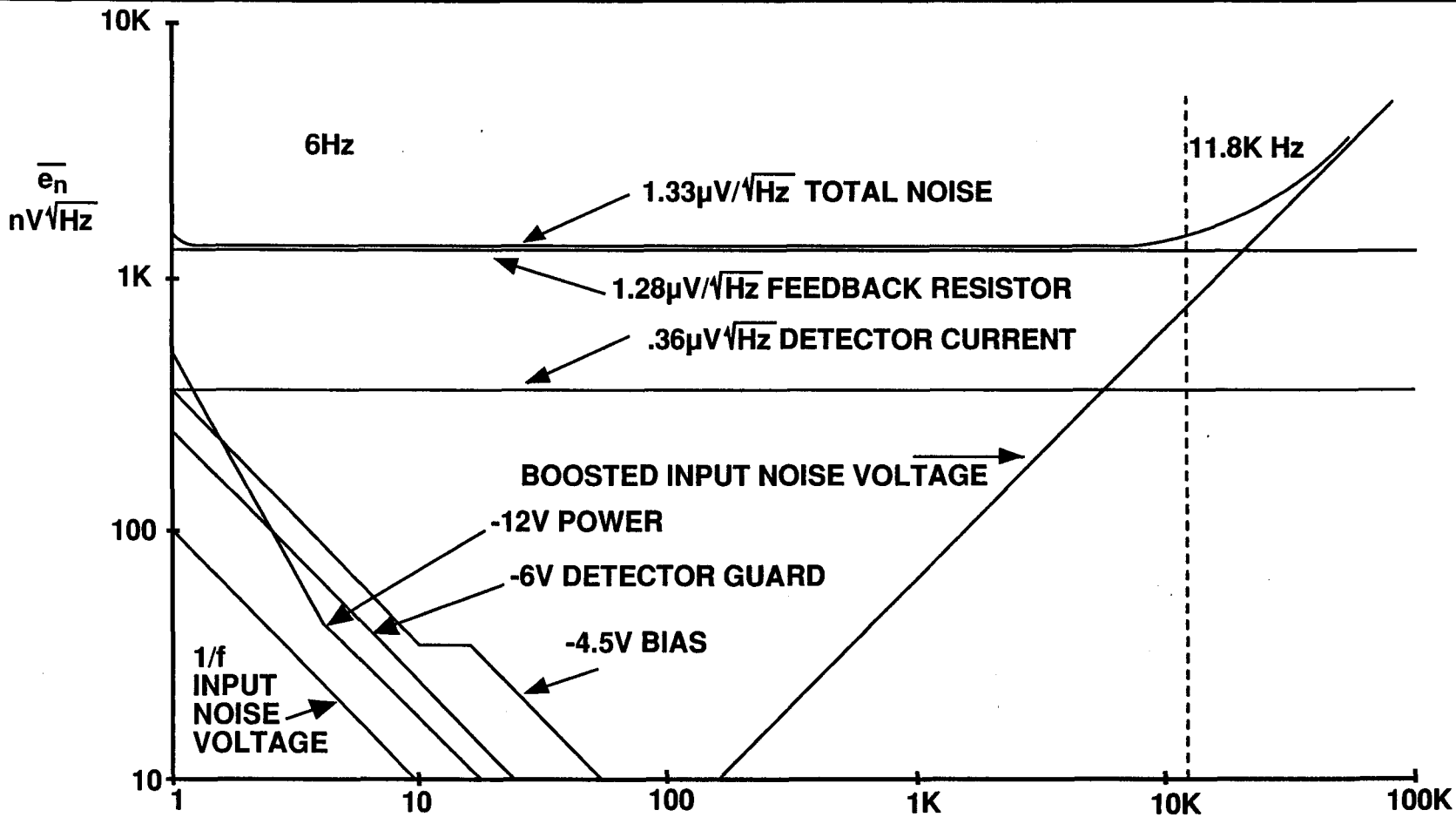

11/91
91-0838-509

MEASUREMENTS OF TIA/PREAMPLIFIER SPOT NOISE INDICATE RESISTOR NOISE LIMITED PERFORMANCE CAN BE EXPECTED

HUGHES

SANTA BARBARA RESEARCH CENTER
a subsidiary

1.35*
$\mu V/\sqrt{Hz}$

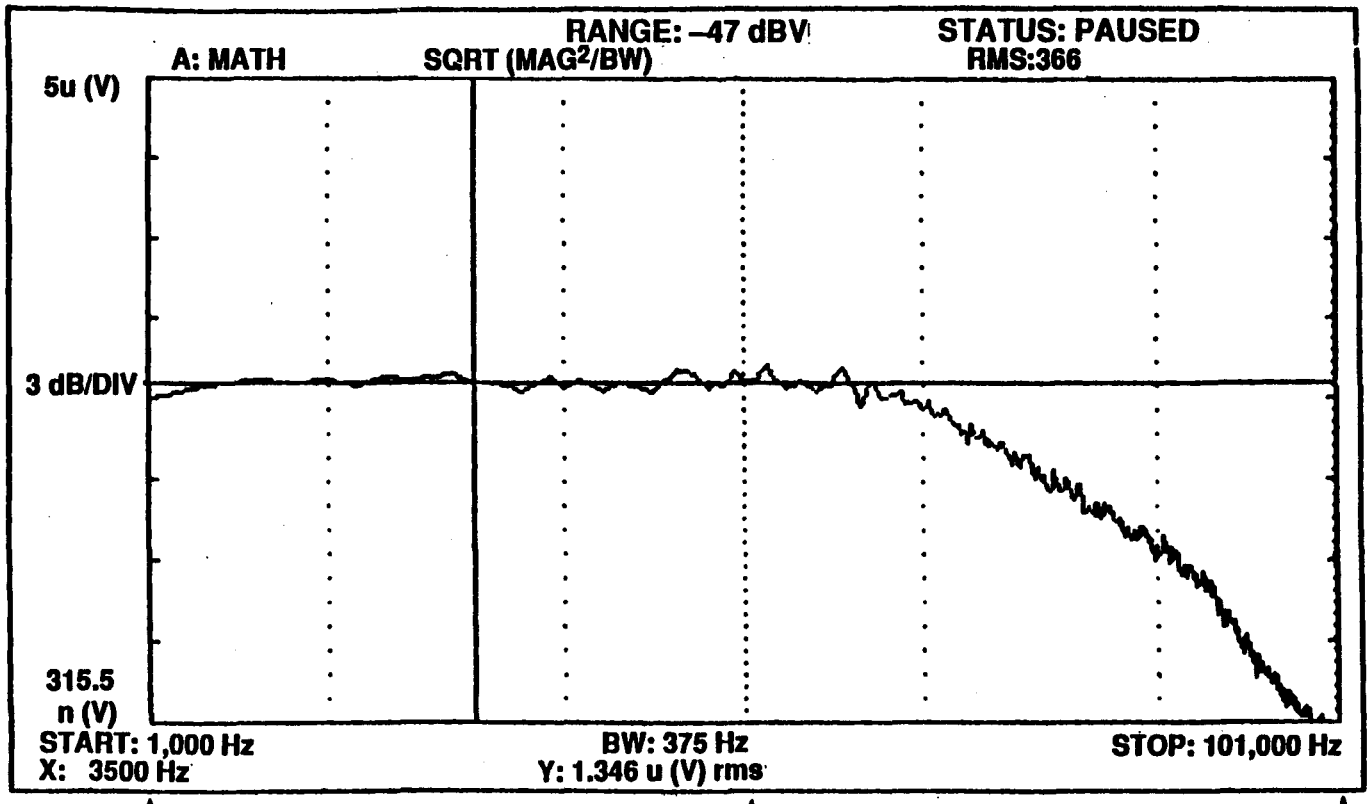

1000 Hz 10,000 Hz 100,000 Hz

*THEORETICAL NOISE FIGURE IS 1.28 $\mu V/\sqrt{Hz}$

11/91
91-0838-510

IDEAL 3-POLE GOLDBERG FILTER RESPONSE
OPTIMIZES STEP RESPONSE WHILE MINIMIZING OVERSHOOT

HUGHES

SANTA BARBARA RESEARCH CENTER
a subsidiary

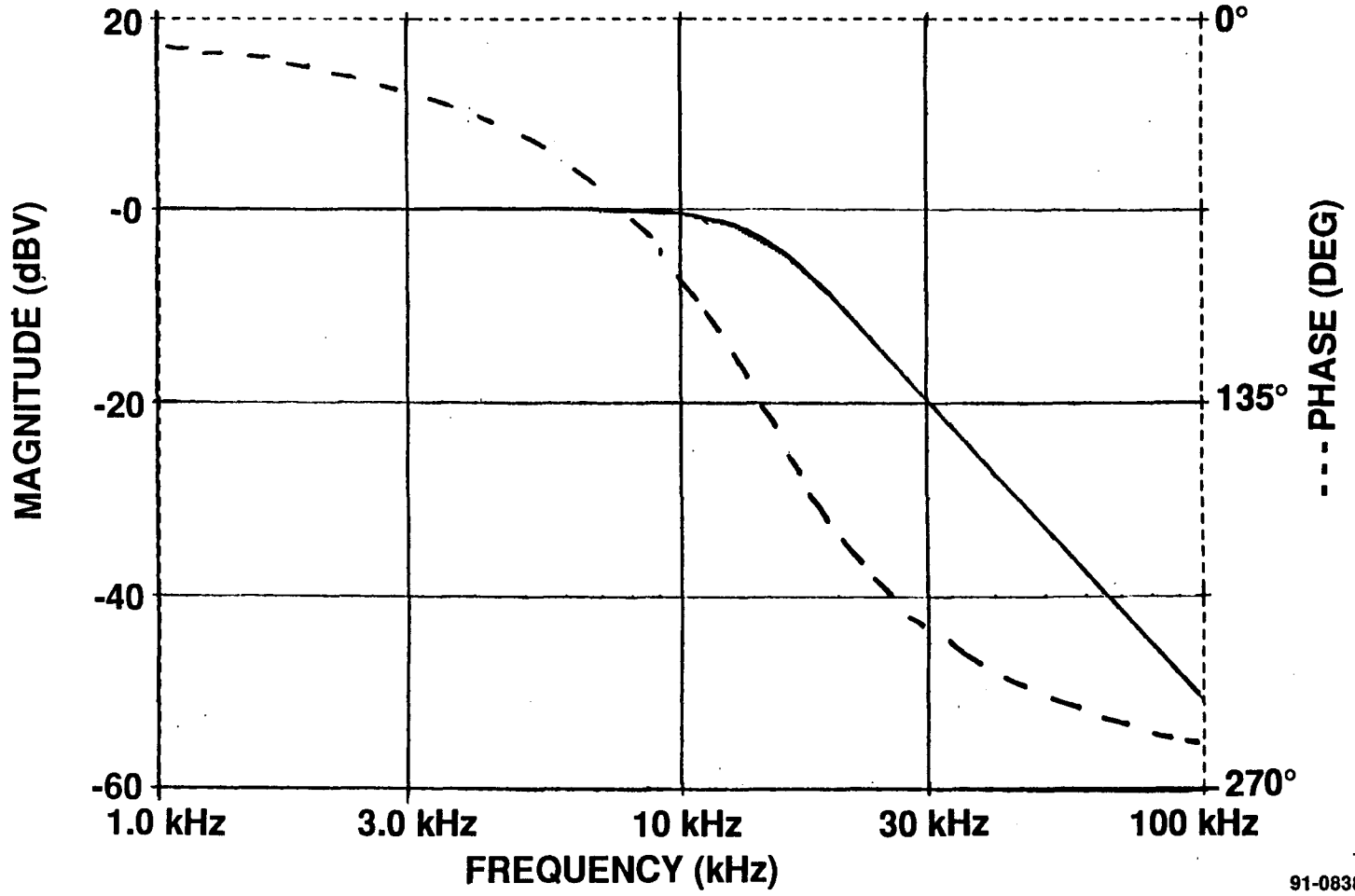

11/91
91-0838-511

MULTIPLE SHIELDING TECHNOLOGIES EMPLOYED TO REDUCE EMI AND RADIATION SUSCEPTIBILITY

HUGHES

SANTA BARBARA RESEARCH CENTER
a subsidiary

- EMI
  - LABYRINTH JOINTS ON HOUSING AND COVERS MINIMIZE INPUT PATHS
  - WILL TEST BREADBOARDS AND ENGINEERING MODEL MOCK-UP
    - E-FIELD PICK-UP
    - M-FIELD PICK-UP
  - MU METAL SHIELDING ADDED TO FPA PACKAGE; TOP AND BOTTOM

- RADIATION (GOAL: DRM ≥2 FOR ANY COMPONENT)
  - 100 mil Al COVERS TO REDUCE ENVIRONMENT TO <25 Krad(Si) (5 YEAR)
  - ADDITIONAL SHIELDING TO COMPONENTS FOUND TO BE SENSITIVE <50 Krad(Si)
  - OP-27 RAD HARD; 2N4416 FET USED PREVIOUSLY
  - MU METAL SHIELD PROVIDES ADDITIONAL SHIELDING FOR FPA ASSEMBLY
  - WILL TEST ENGR MODEL ARRAY AND PREAMP CIRCUIT TO >100 Krad(Si)
    - TL062 OPAMPS IN PREAMP EXHIBIT OFFSET SHIFT ABOVE 20 Krad(Si)

FPA TO PREAMP HARNESS ALLOWS FLEXIBILITY FOR OPTICAL ALIGNMENT

HUGHES

SANTA BARBARA RESEARCH CENTER
a subsidiary

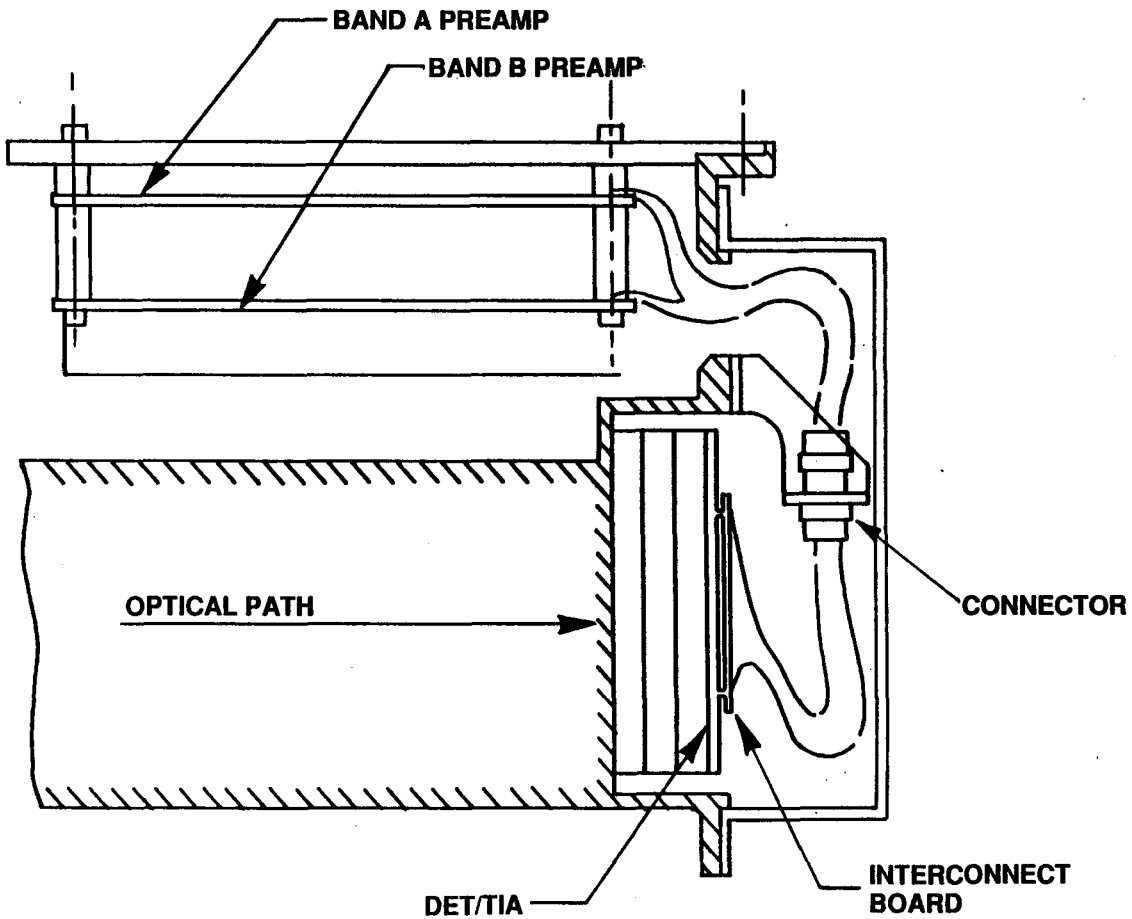

11/91
91-0838-512

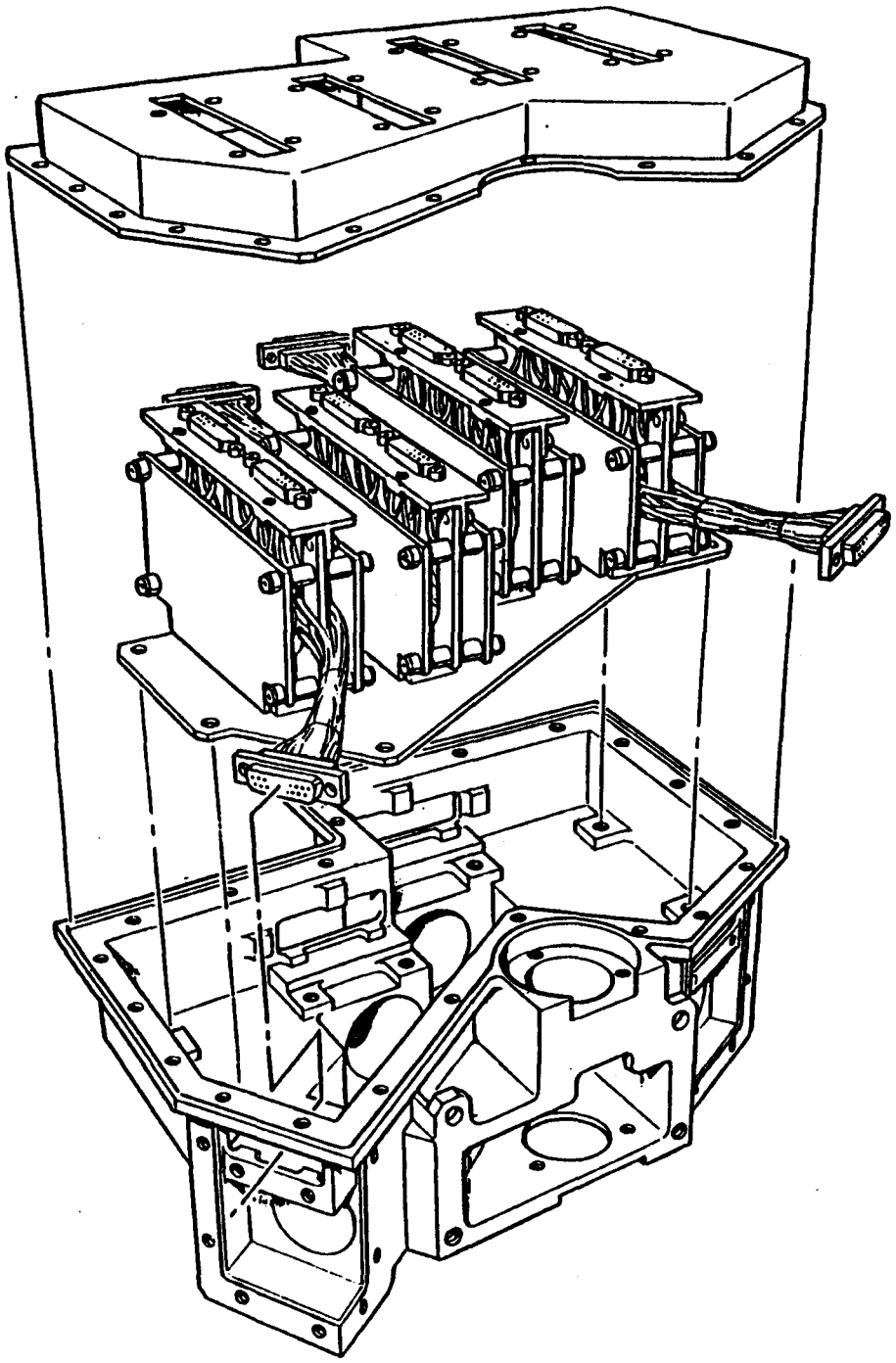

HUGHES

SANTA BARBARA RESEARCH CENTER
a subsidiary

AFT OPTICS BENCH HARNESS CONFIGURATION SIMPLIFIES CARD REPAIR

SeaWiFS

11/91
91-0838-514

SeaWiFS CDR ELECTRONICS MODULE

HUGHES

SANTA BARBARA RESEARCH CENTER
a subsidiary

- POSTAMPLIFIERS
- TIMING
- SERVO DRIVES (SEPARATE SECTION)
- COMMAND AND TELEMETRY
- POWER SUPPLY
- EDU/BREADBOARD STATUS

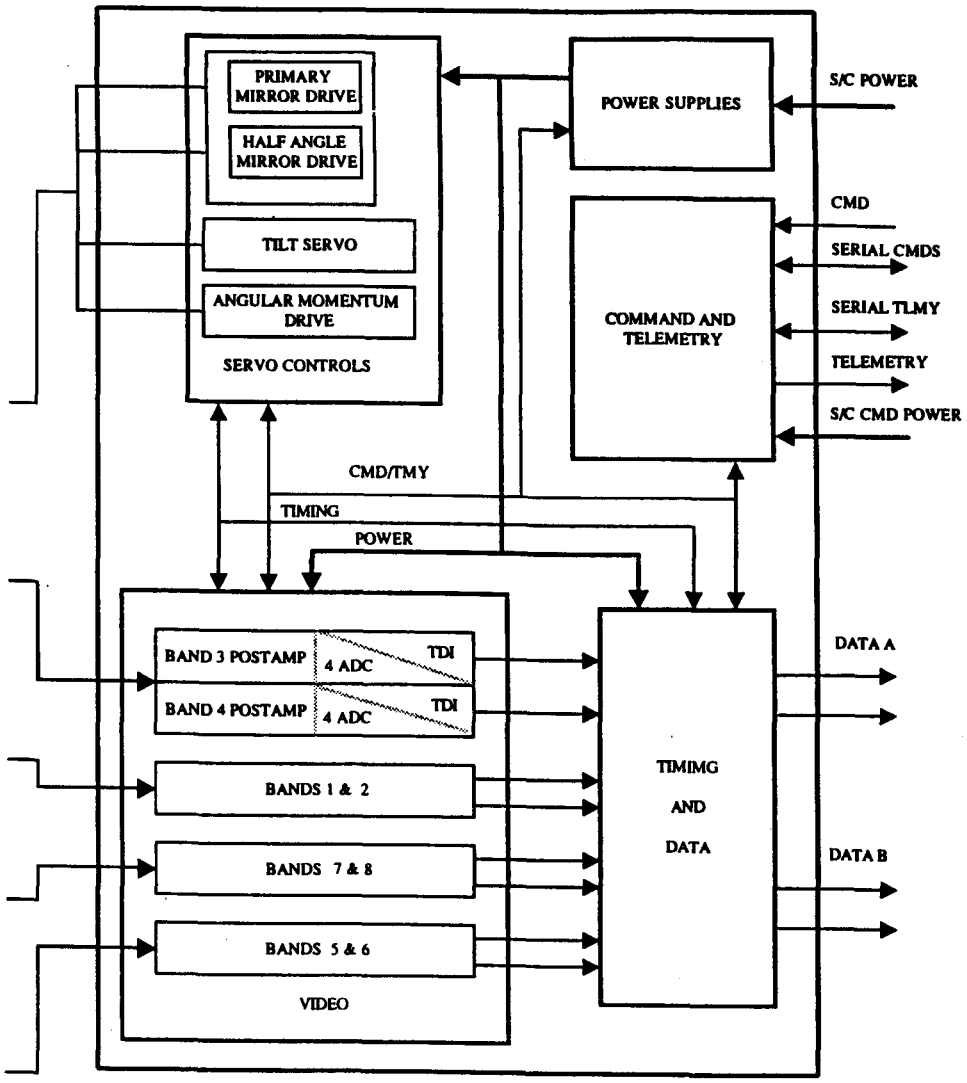

HUGHES

SANTA BARBARA RESEARCH CENTER
a subsidiary

ELECTRONICS MODULE (EM) BLOCK DIAGRAM

SeaWiFS

11/91
91-0838-515B

POSTAMP POWER REGULATOR BLOCK DECREASES FPA/PREAMP POWER DISSIPATION

HUGHES

SANTA BARBARA RESEARCH CENTER
a subsidiary

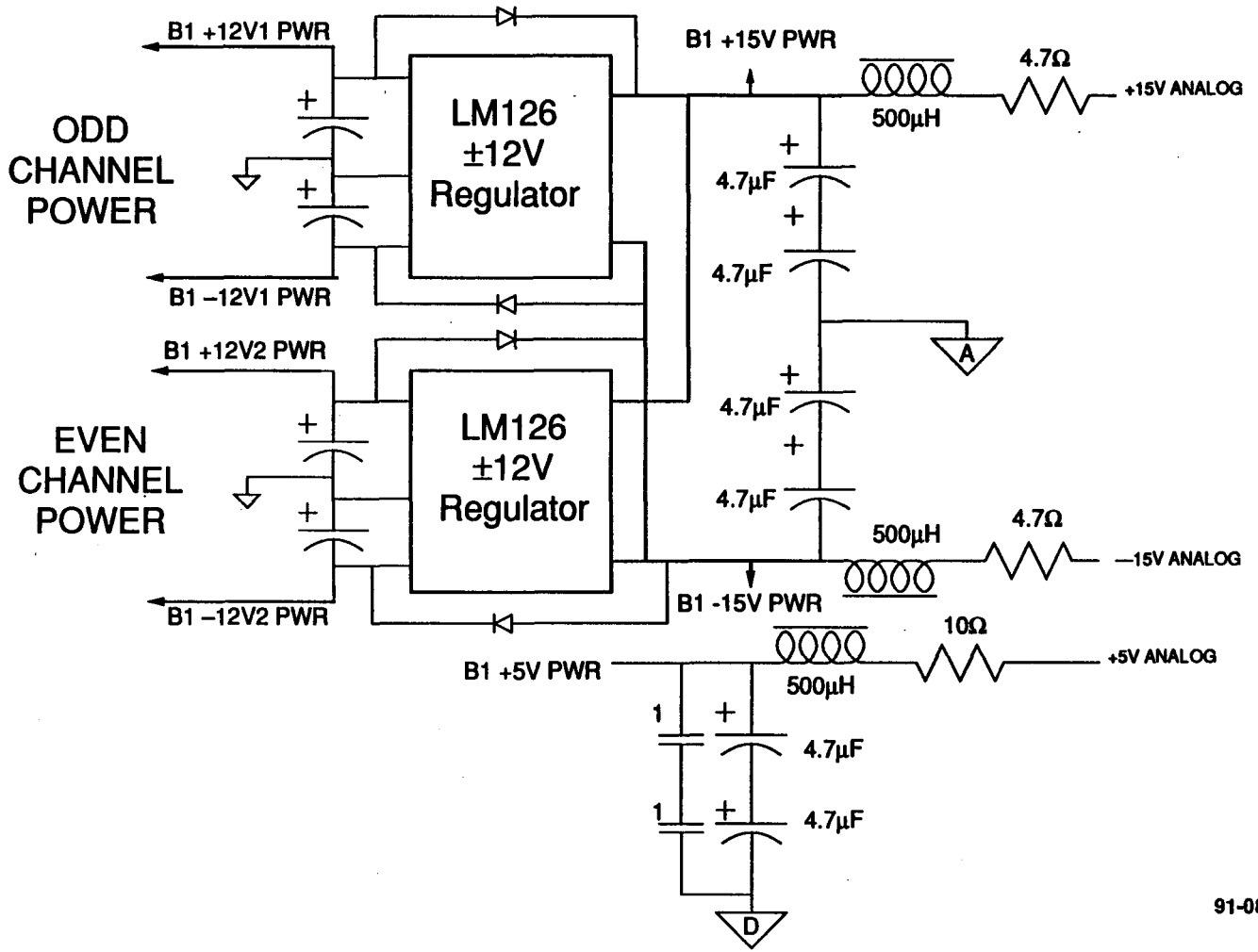

11/91
91-0838-515C

POSTAMP DC RESTORE BLOCK REMOVES RESIDUAL FPA/PREAMP OFFSETS BEFORE EACH SCAN

HUGHES

SANTA BARBARA RESEARCH CENTER
a subsidiary

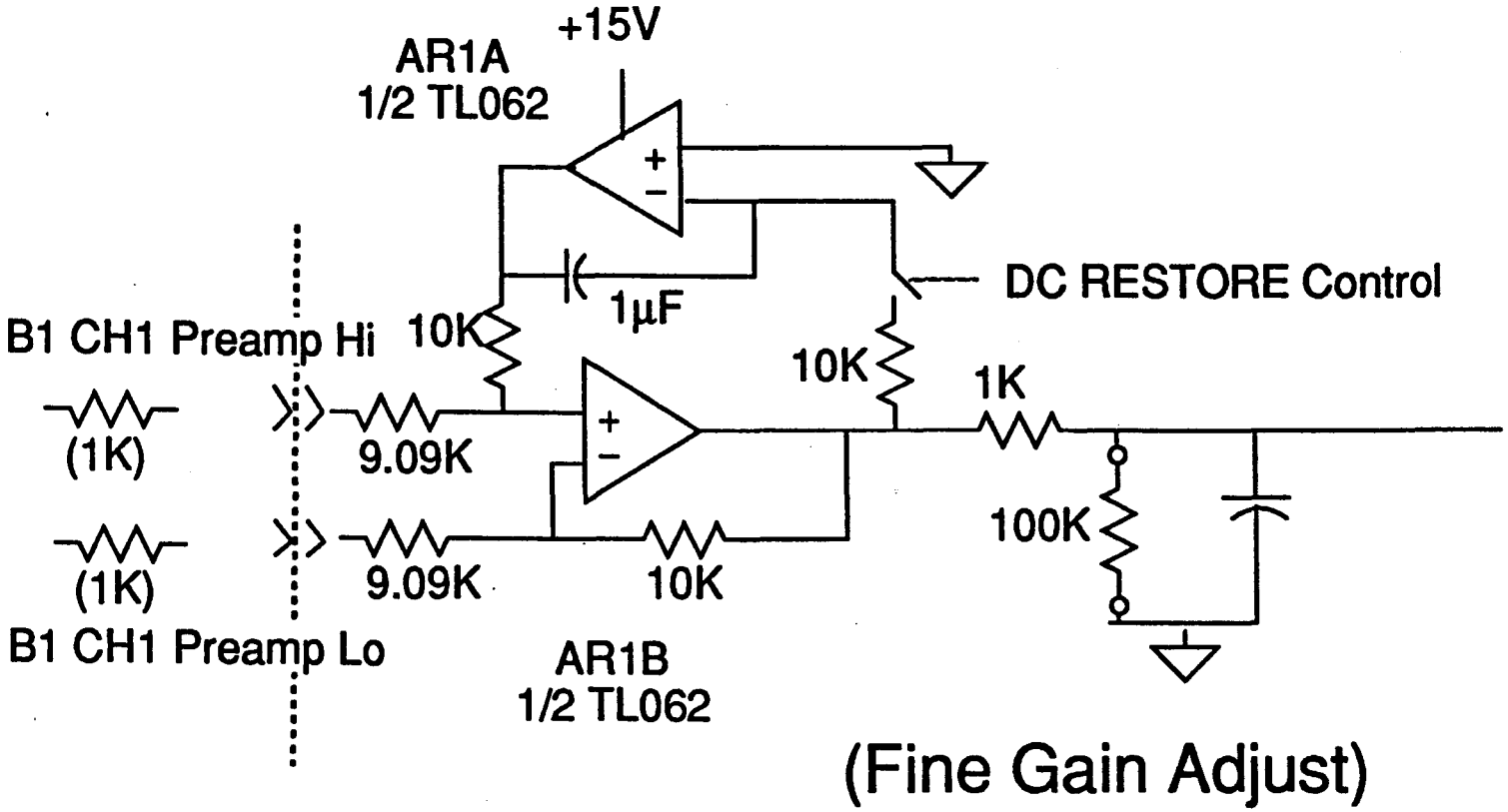

DIFF-SINGLE, DC RESTORE

11/91
91-0838-515D

POSTAMP GAIN AND FILTER BLOCK IMPLEMENTS FOUR GAIN MODES AND GOLDBERG FILTER

HUGHES

SANTA BARBARA RESEARCH CENTER
a subsidiary

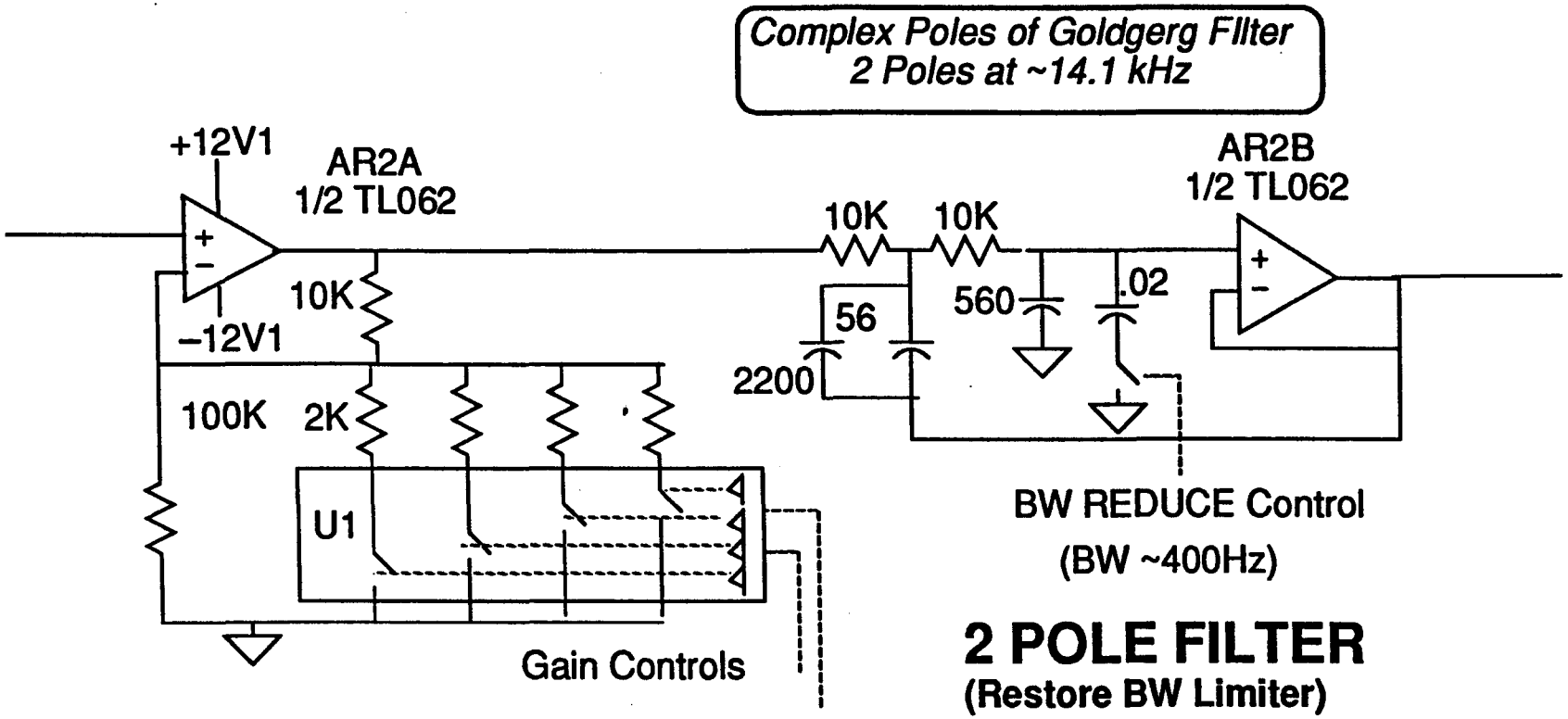

2 POLE FILTER
(Restore BW Limiter)

VAR GAIN AND 1 POLE FILTER
X1, X2, SOLAR, LUNAR GAIN

4 Variable Differential Gains; Ratios: x1.2 to x10

11/91
91-0838-515E

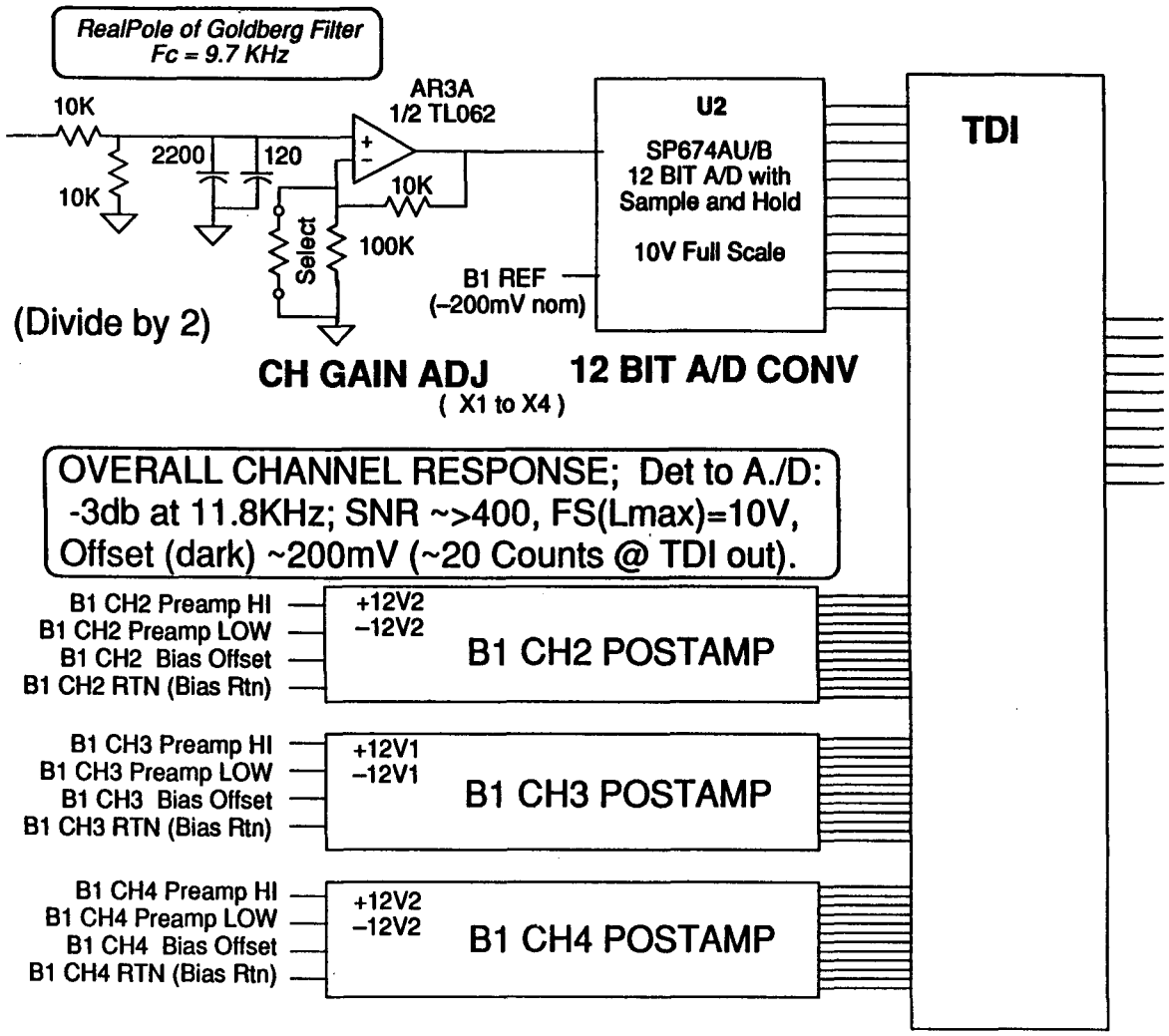

HUGHES

SANTA BARBARA RESEARCH CENTER
a subsidiary

POSTAMP A/D AND TDI BLOCK DIGITIZES EACH CHANNEL AND IMPROVES S/N RATIO

SeaWiFS™

11/91
91-0838-515F

10/30/91

GAIN State and GAIN Mode Tables

STATE: BAND	GAIN 1 postamp	GAIN 2 ratio	GAIN 3 ratio	GAIN 4 ratio
1	4.77	2.16	1.40	1.80
2	4.14	2.00	1.35	1.74
3	3.55	2.00	1.21	1.60
4	3.90	2.00	1.19	1.60
5	5.79	2.00	0.78	1.50
6	5.79	2.00	0.45	0.70
7	4.59	2.00	0.35	0.62
8	5.54	2.00	0.28	0.55

MODE: BAND	X1	X2	LUNAR	SOLAR
1	GAIN 1	GAIN 2	GAIN 2	GAIN 2
2	GAIN 1	GAIN 2	GAIN 4	GAIN 4
3	GAIN 1	GAIN 2	GAIN 3	GAIN 3
4	GAIN 1	GAIN 2	GAIN 1	GAIN 3
5	GAIN 1	GAIN 2	GAIN 3	GAIN 1
6	GAIN 1	GAIN 2	GAIN 3	GAIN 4
7	GAIN 1	GAIN 2	GAIN 3	GAIN 4
8	GAIN 1	GAIN 2	GAIN 3	GAIN 4

NOTES
1. Postamp gain is preamp output to A/D input (~10V) as of [10/11/91]
2. Gain 2, 3 and 4 ratios are relative to Gain 1
3. A separate (Coarse) gain stage determines overall Postamp gain
4. Overall System gain is Idet x100megΩ(TIA) x 8 x postamp gain

HUGHES

SANTA BARBARA RESEARCH CENTER
a subsidiary

ANALOG CHANNEL GAIN RATIOS

SeaWiFS™

11/91
91-0838-516A

GOLDBERG FILTER HAS MINIMAL OVERSHOOT AND RINGING TO MINIMIZE EDGE EFFECTS IN DATA

HUGHES

SANTA BARBARA RESEARCH CENTER
a subsidiary

SIMULATED 3-POLE GOLDBERG RESPONSE

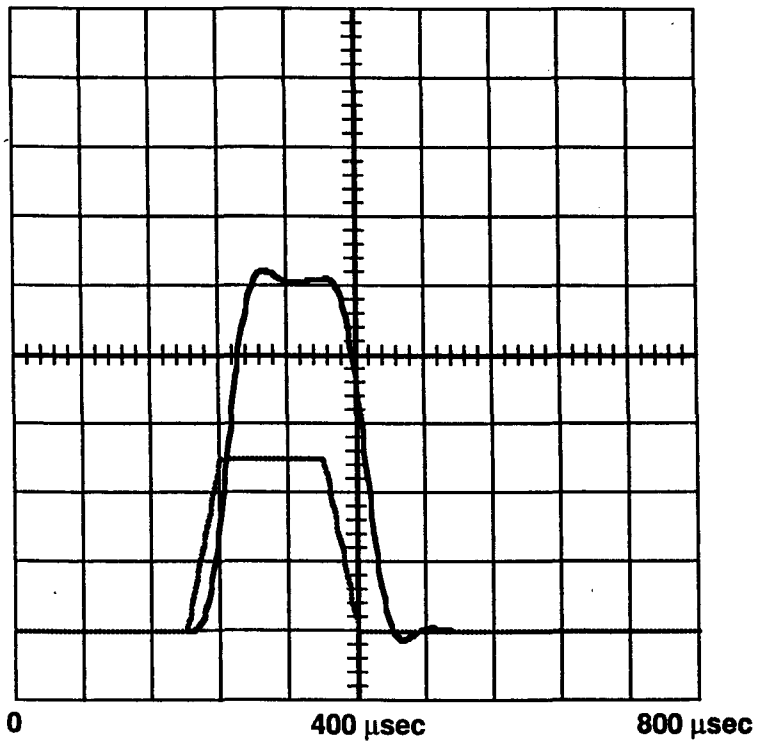

TIME
X-SCALE FACTOR: 80 µsec/DIV

EXPANDED SCALE 3-POLE GOLDBERG RESPONSE SHOWING -2.5% OVERSHOOT AND ONE CYCLE RINGING (10 BIT LSB ~10mV)

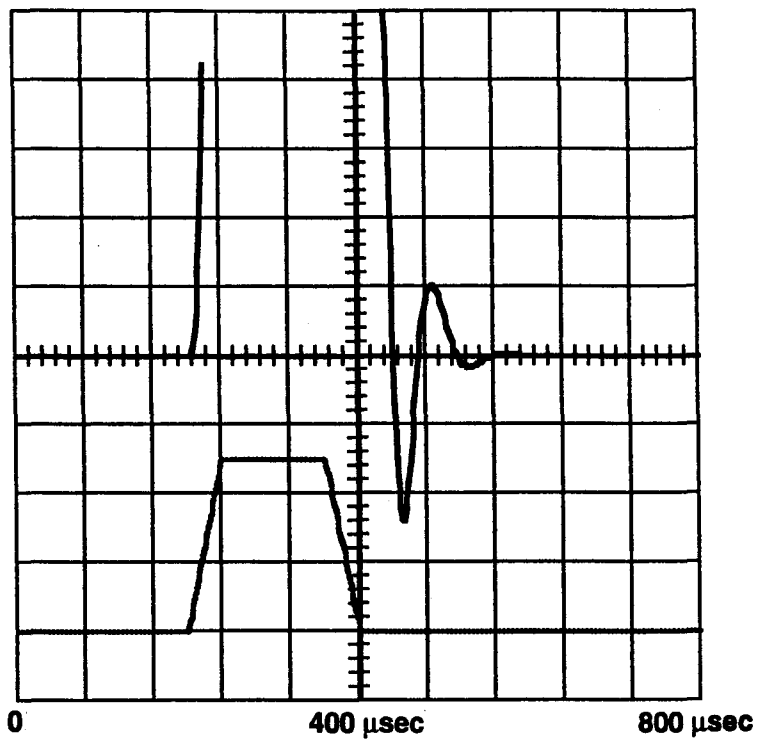

TIME
X-SCALE FACTOR: 80 µsec/DIV

11/91
91-0838-517AA

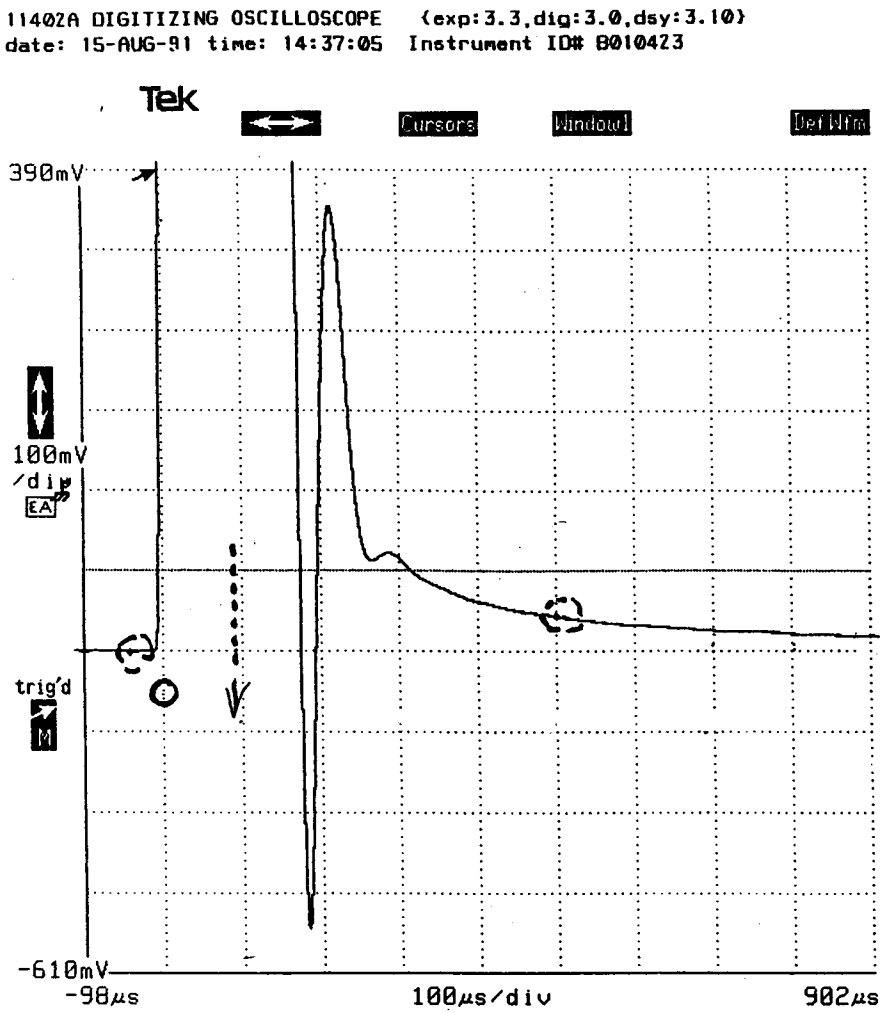

(22X OVERDRIVE)

HUGHES

SANTA BARBARA RESEARCH CENTER
a subsidiary

MEASUREMENT OF ANALOG CHANNEL RESPONSE SHOWING AGREEMENT WITH PREDICTION EXCEPT FOR BRIGHT TARGET RECOVERY (COMMERCIAL SINGLE ELEMENT PHOTODIODE)

SeaWiFS

11/91
91-0838-517AB

11402A DIGITIZING OSCILLOSCOPE {exp:3.3,dig:3.0,dsy:3.10}
date: 22-NOV-91 time: 10:52:18 Instrument ID# B010423

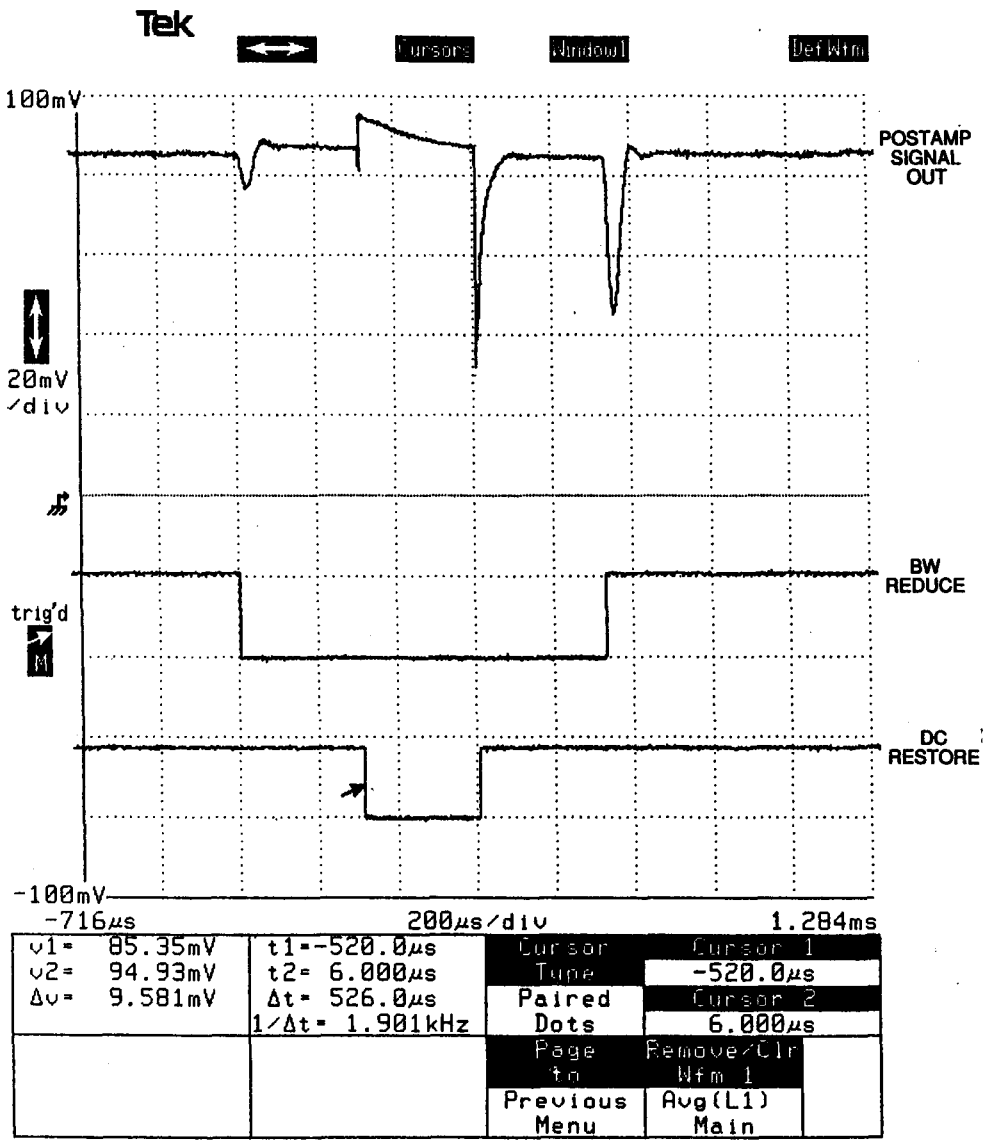

HUGHES

SANTA BARBARA RESEARCH CENTER
a subsidiary

DC RESTORE SWITCHING TRANSIENTS RECOVER IN LESS THAN 1 PIXEL

SeaWiFS

11/91
91-0838-517A

A/D CONVERTER CHOICE IS DRIVEN BY RAD HARDNESS, SPEED, AND APERTURE DELAY REQUIREMENTS

HUGHES

SANTA BARBARA RESEARCH CENTER
a subsidiary

- 12 BIT A/D
- SPEED: 10 μs/CONVERSION
- POWER: 150 mW TO 500 mW
- QUANTITY: 4 PER BAND, 32 PER SYSTEM
- RADIATION: >20 Krad OR SHIELDED EQUIVALENT

- CANDIDATES: SP 674 (SIPEX) OR EQUIVALENT

TIME DELAY INTEGRATION (TDI) TECHNIQUE IMPROVES SNR AND PROVIDES PARTIAL IMMUNITY TO DETECTOR CHANNEL FAILURE

HUGHES

SANTA BARBARA RESEARCH CENTER
a subsidiary

TDI SIGNAL PROCESSING STEPS

1. SAMPLE DETECTOR CHANNELS WITHIN A BAND AT 1/4 PIXEL INTERVALS
2. DELAY EACH CHANNEL IN A PIPELINE SHIFT REGISTER BY VARIABLE AMOUNTS SUCH THAT 4 SAMPLES OF A GROUND PIXEL ARE COREGISTERED
3. SUM ANY TWO SAMPLES TO FORM SUM A
4. SUM ANY TWO SAMPLES TO FORM SUM B
5. ADD SUM A TO SUM B AND TRUNCATE TO 10 BITS
6. DELAY ODD BANDS BY 8 PIXELS
7. FORM OUTPUT 80-BIT WORD

TDI GROUND LOCATIONS

HUGHES
SANTA BARBARA RESEARCH CENTER
a subsidiary

Sampling at 1/4 Pixel Intervals gives Contiguous Digital Data Values

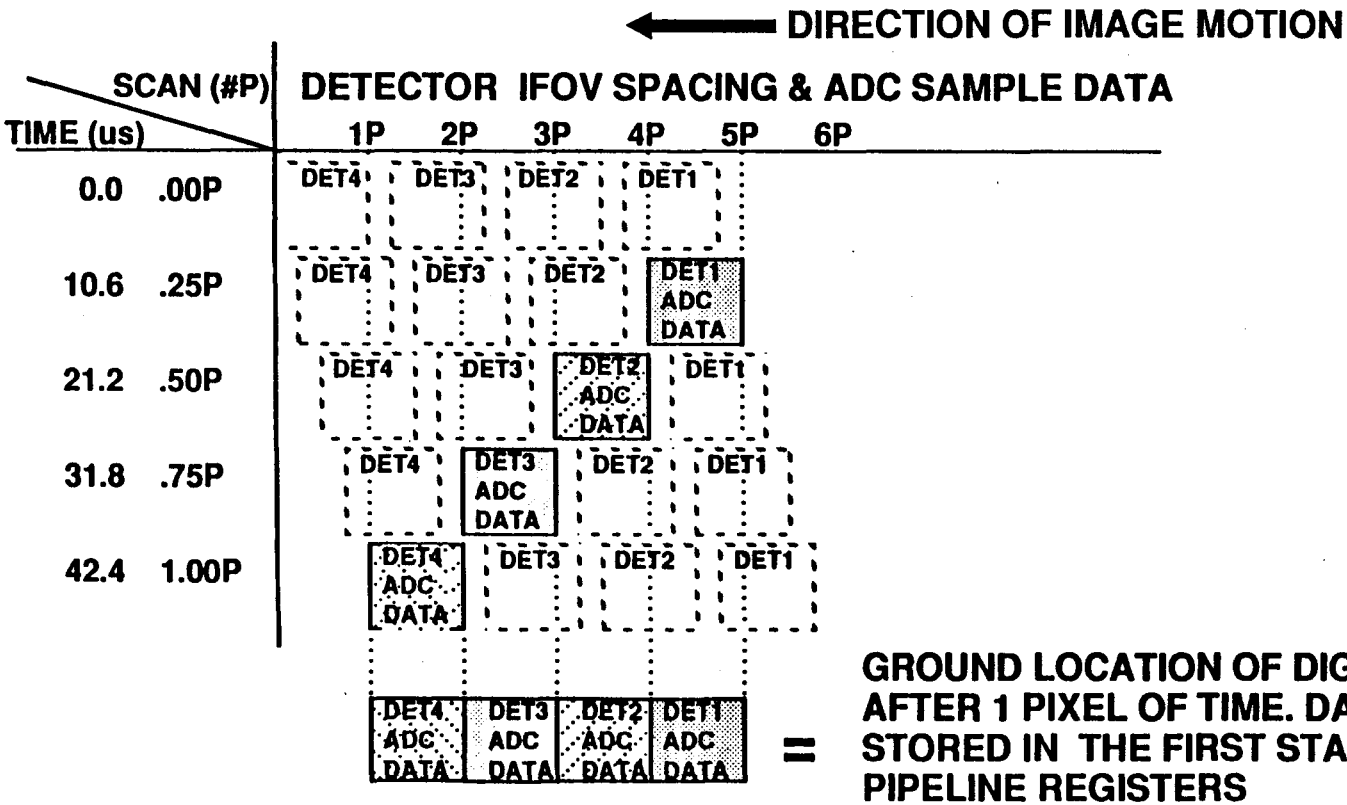

= GROUND LOCATION OF DIGITAL DATA AFTER 1 PIXEL OF TIME. DATA IS STORED IN THE FIRST STAGE OF TDI PIPELINE REGISTERS

11/91
91-0838-520

TDI BLOCK DIAGRAM USES DISCRETE ELECTRONICS

HUGHES

SANTA BARBARA RESEARCH CENTER
a subsidiary

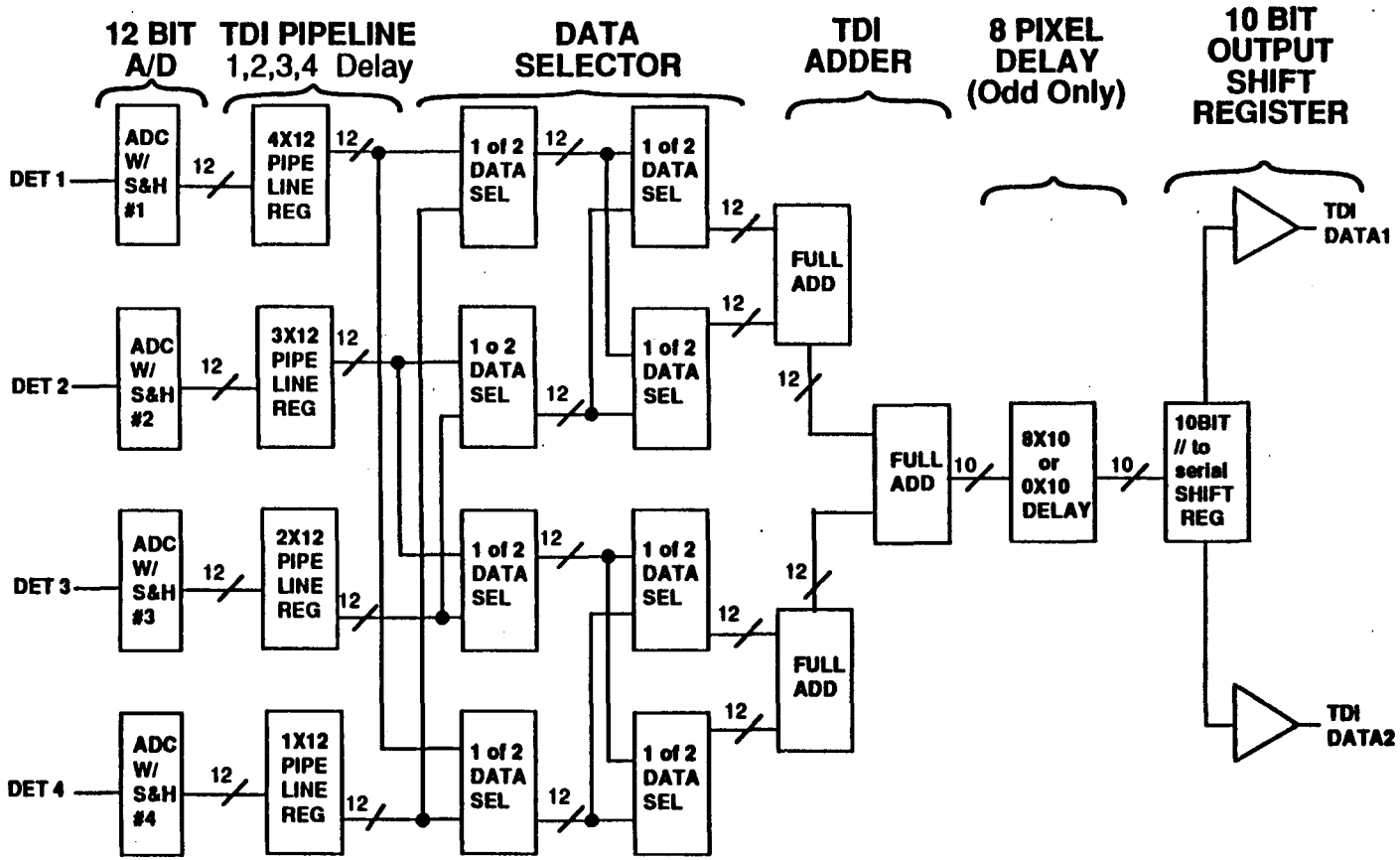

TDI ADDER ALWAYS ADDS 4 12-BIT VALUES AND SELECTS 10 MSBs

11/91
91-0838-521

VIDEO DIGITAL DATA FLOWS TO THE SPACECRAFT OVER REDUNDANT PATHS

HUGHES

SANTA BARBARA RESEARCH CENTER
a subsidiary

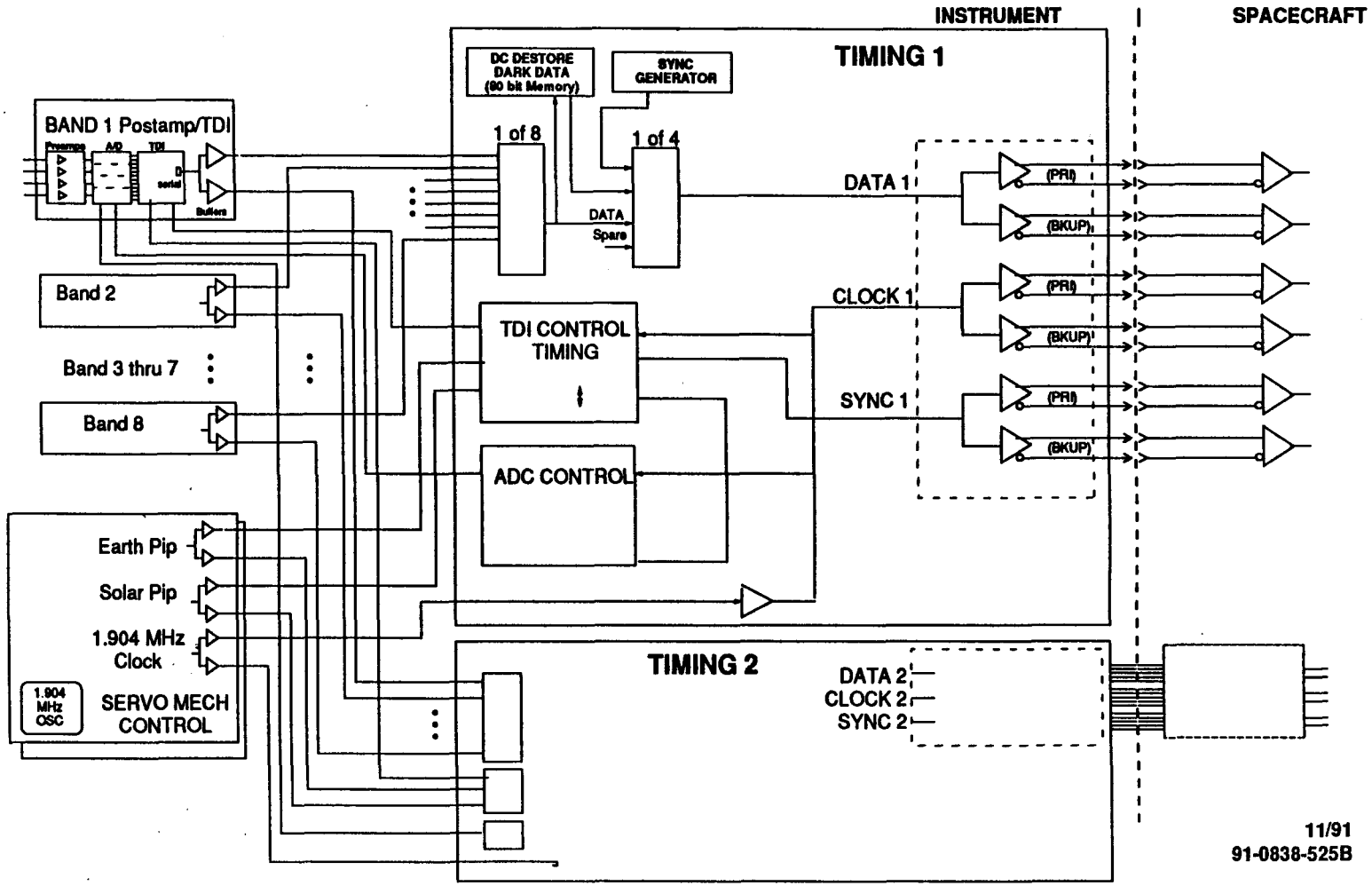

11/91
91-0838-525B

TIMING

11/91
91-0838-523

Solid Lines: Aperture Limits (Earth, Solar & Telescope)
Dotted Lines: Telescope Pointing Angles

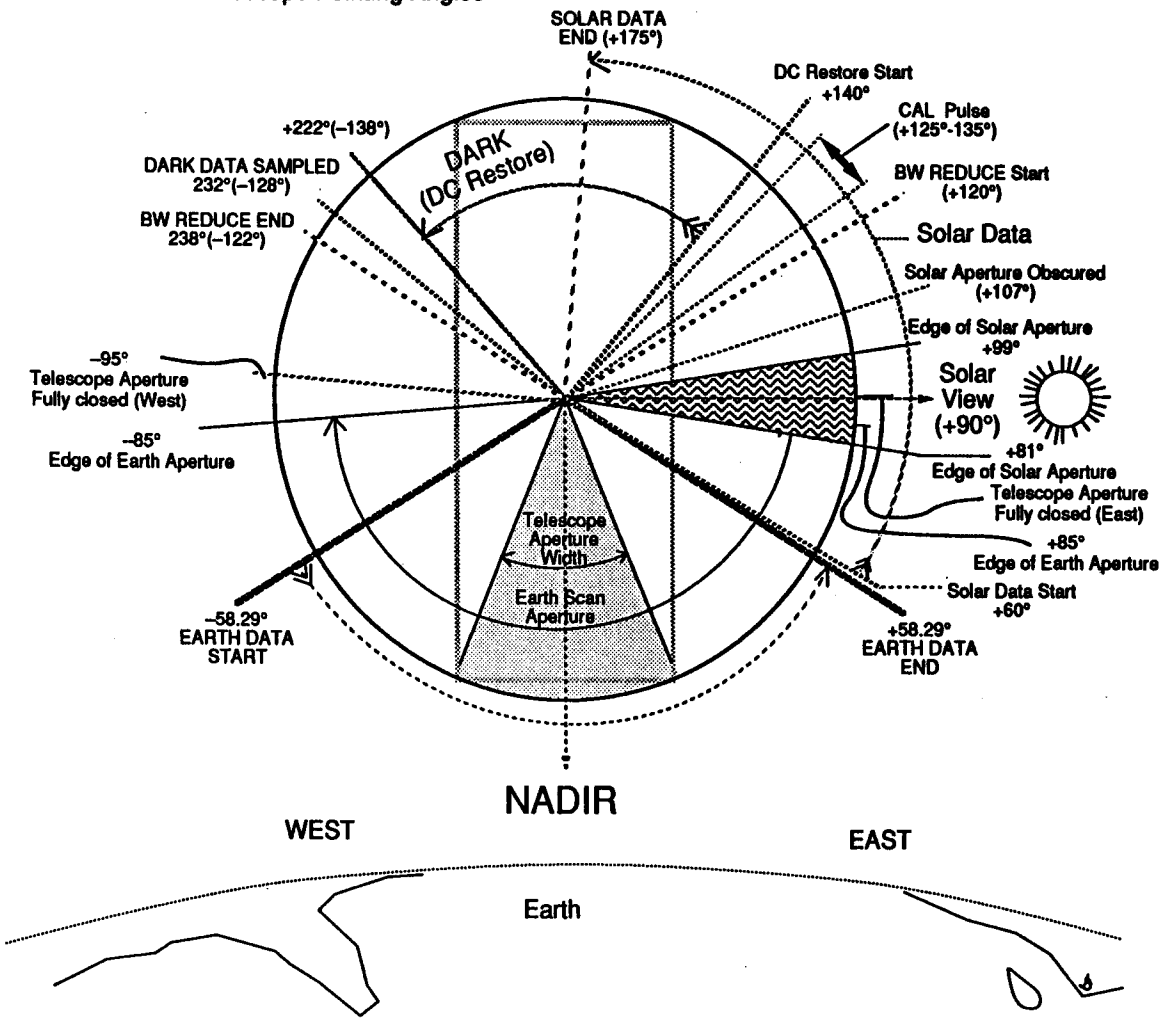

HUGHES

SANTA BARBARA RESEARCH CENTER
a subsidiary

SCANNER APERTURE AND POINTING ANGLES

SeaWiFS™

11/91
91-0838-524

SeaWiFS TIMING

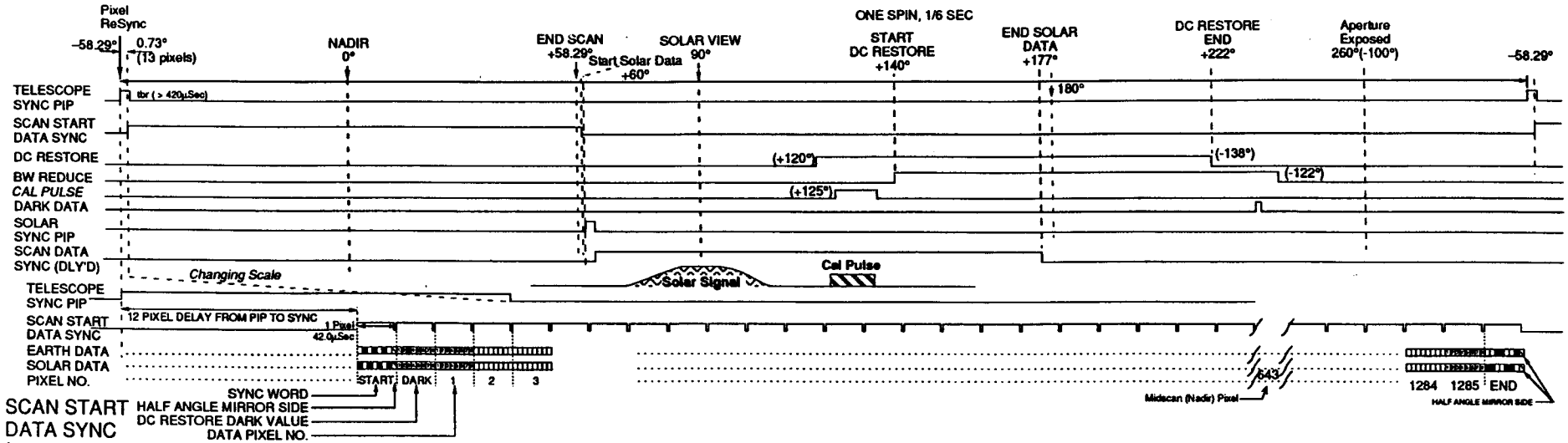

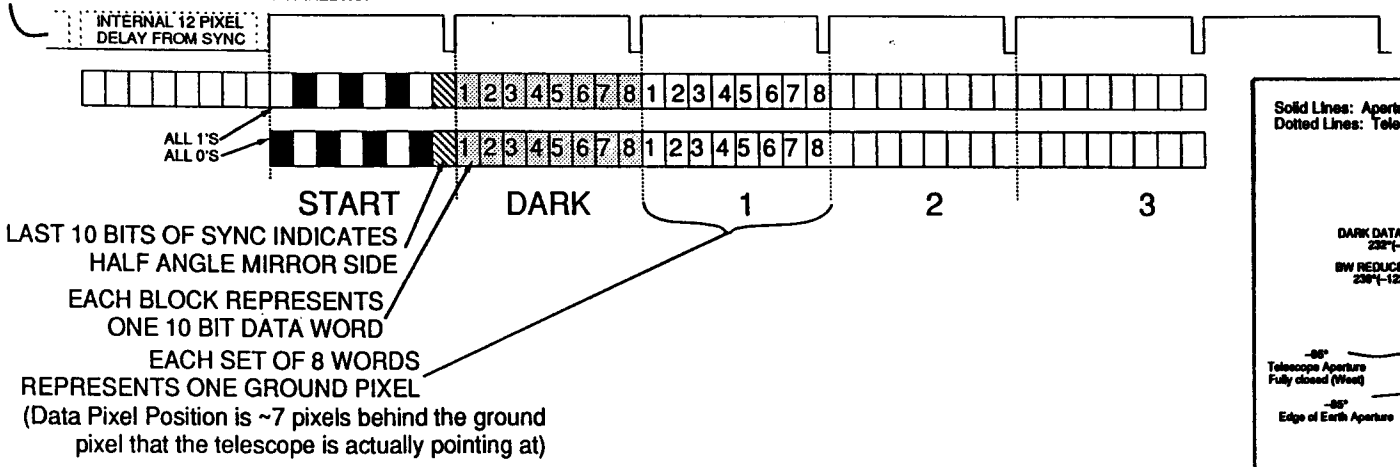

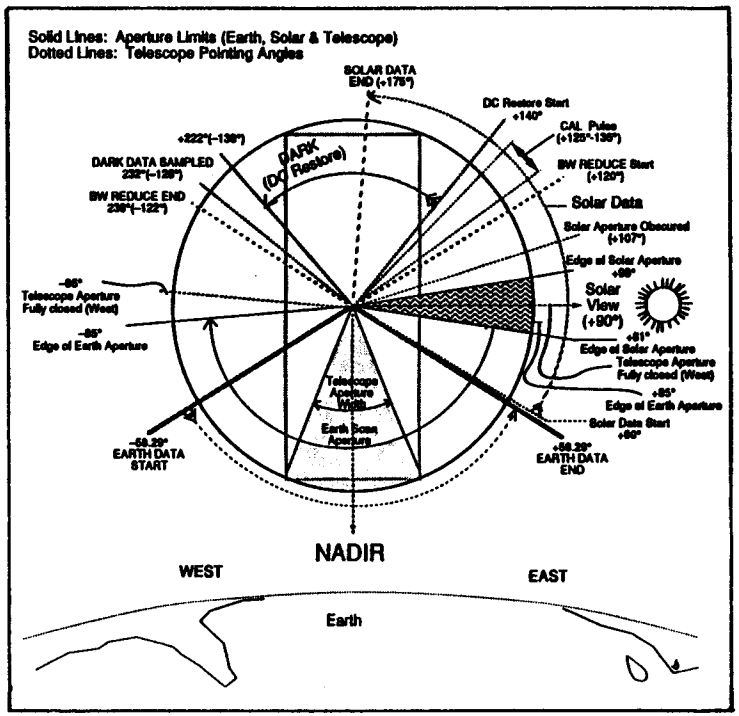

11/91
91-0838-525

UNIQUE SYNC PATTERNS PROVIDE BOTH MODE AND HALF ANGLE MIRROR INFORMATION

HUGHES

SANTA BARBARA RESEARCH CENTER
a subsidiary

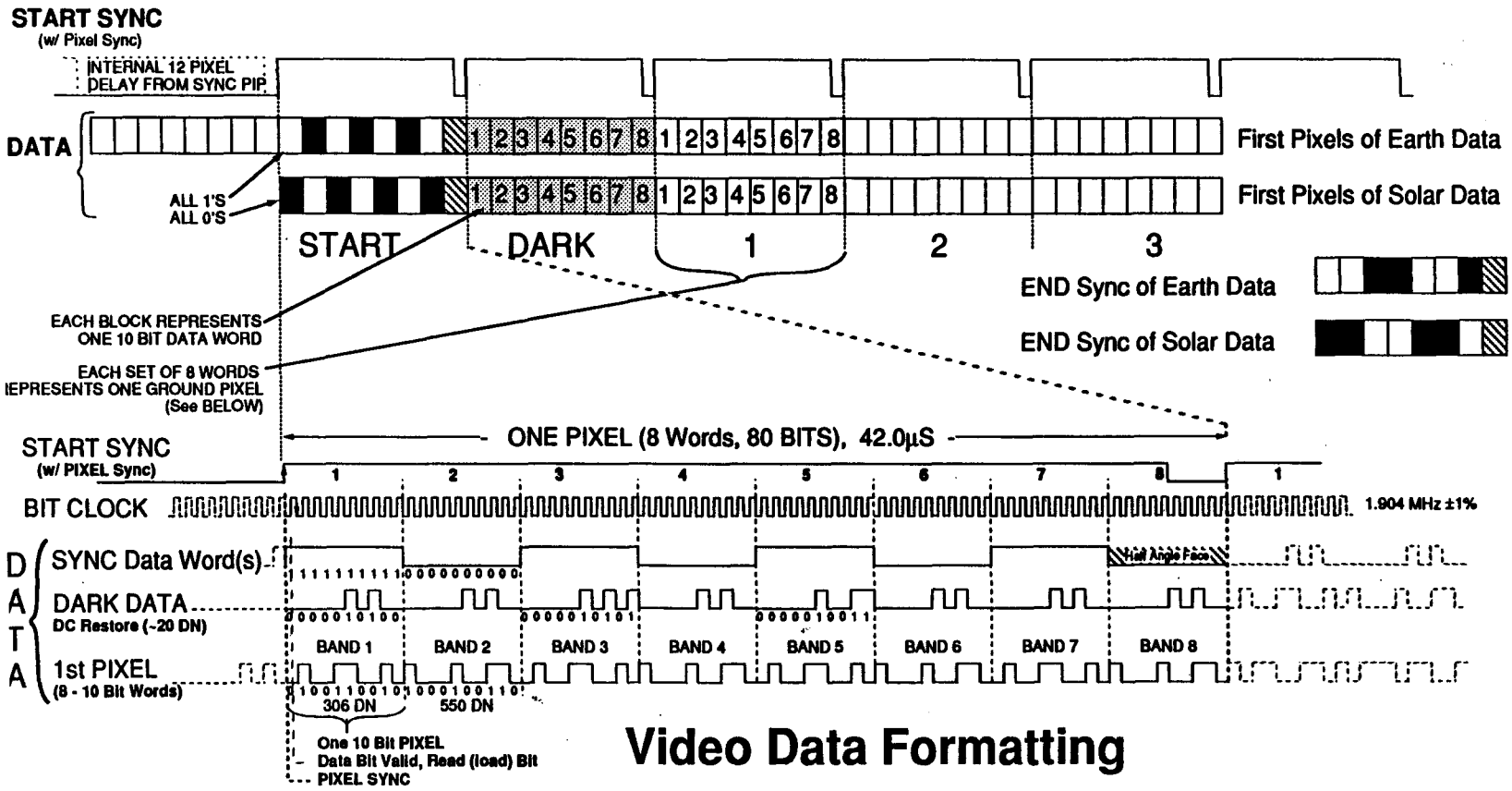

Video Data Formatting

11/91
91-0838-525A

COMMAND AND TELEMETRY

COMMAND INTERFACE USES BOTH DISCRETE AND SERIAL IMPLEMENTATION

HUGHES

SANTA BARBARA RESEARCH CENTER
a subsidiary

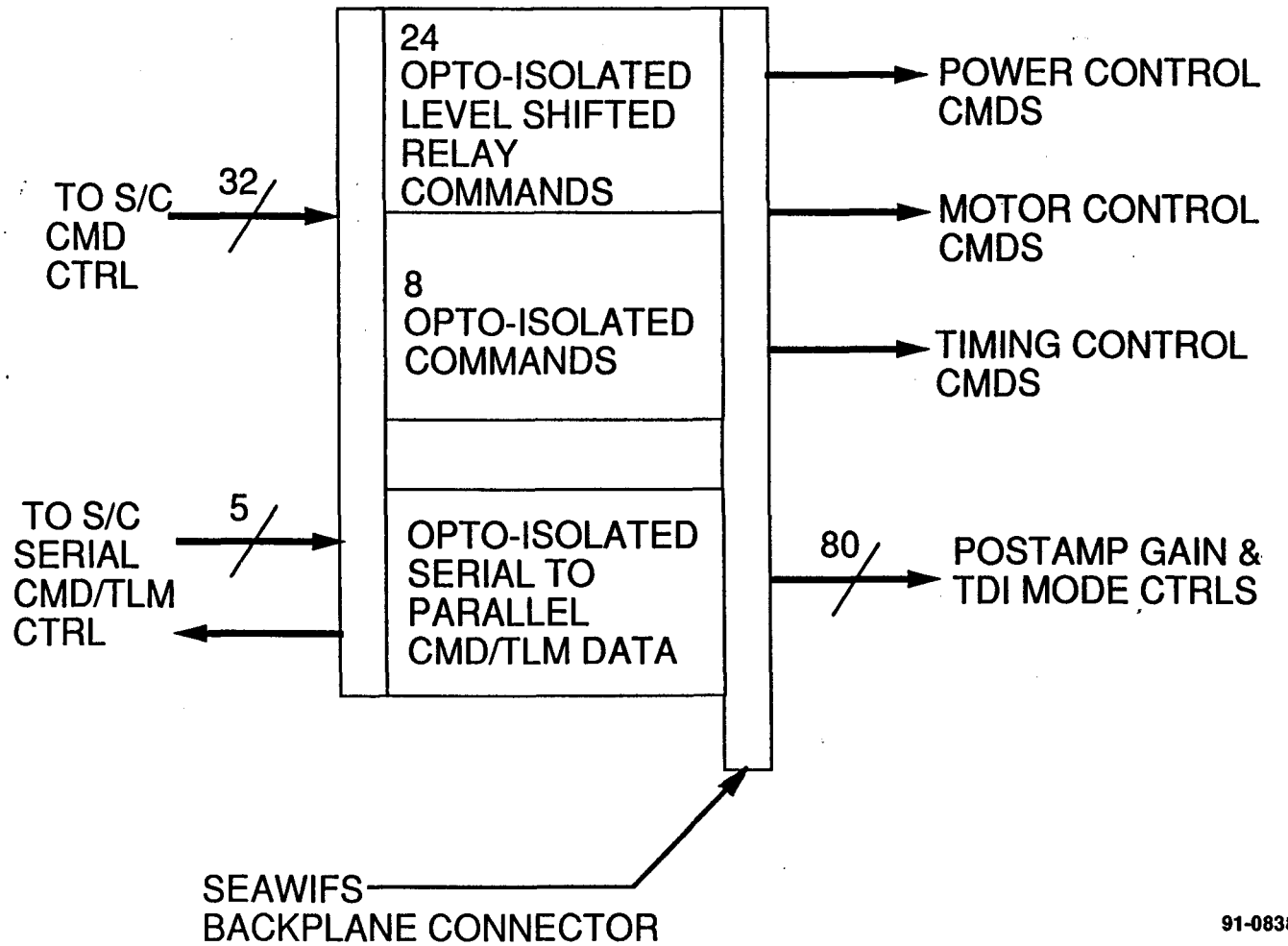

11/91
91-0838-526A

	CONNECTOR 22 & 23		CONNECTOR 22 & 23
PIN	NAME	PIN	NAME
1	SERIAL CMD IN	27	TILT DR B ON
2	SERIAL CMD CLK	28	TILT DR OFF
3	POS 28V RTN	29	TILT OFF
4	POS 28V CMD PWR	30	TILT FWD 1 STEP
5	POS 5V CMD RTN	31	TILT FWD +20 DEG
6	SHIELD 2	32	TILT REV 1 STEP
7	PS A ON	33	TILT REV -20 DEG
8	PS A OFF	34	SPARE 1
9	PS B ON	35	SHIELD 3
10	PS B OFF	36	SHIELD 1
11	STOW ON	37	SERIAL TLMY DATA
12	STOW OFF	38	SERIAL TLMY CLK
13	ANALOG PWR ON	39	POS 5V CMD PWR
14	ANALOG PWR OFF	40	POS 5V CMD PWR
15	SERVO A ON	41	HEATERS ON
16	SERVO B ON	42	HEATERS OFF
17	SERVO MTR STOP	43	SOLAR DOOR OPEN
18	CHASSIS BRAID (SHIELD 6)	44	SOLAR DOOR OFF
19	SERIAL CMD ENABLE	45	TMG A
20	POS 28V RTN	46	TMG B
21	SERIAL TLMY ENABLE	47	EARTH DATA MODE SELECT
22	POS 28V CMD PWR	48	SOLAR CAL MODE SELECT
23	POS 5V CMD RTN	49	SPARE 2
24	ANG MOM ON	50	SPARE 3
25	ANG MOM OFF	51	SHIELD 5
26	TILT DR A ON		

HUGHES

SANTA BARBARA RESEARCH CENTER
a subsidiary

COMMAND LIST

SeaWiFS

11/91
91-0838-526B

56 TELEMETRY CHANNELS PROVIDE INSTRUMENT STATUS/HEALTH

HUGHES
SANTA BARBARA RESEARCH CENTER
a subsidiary

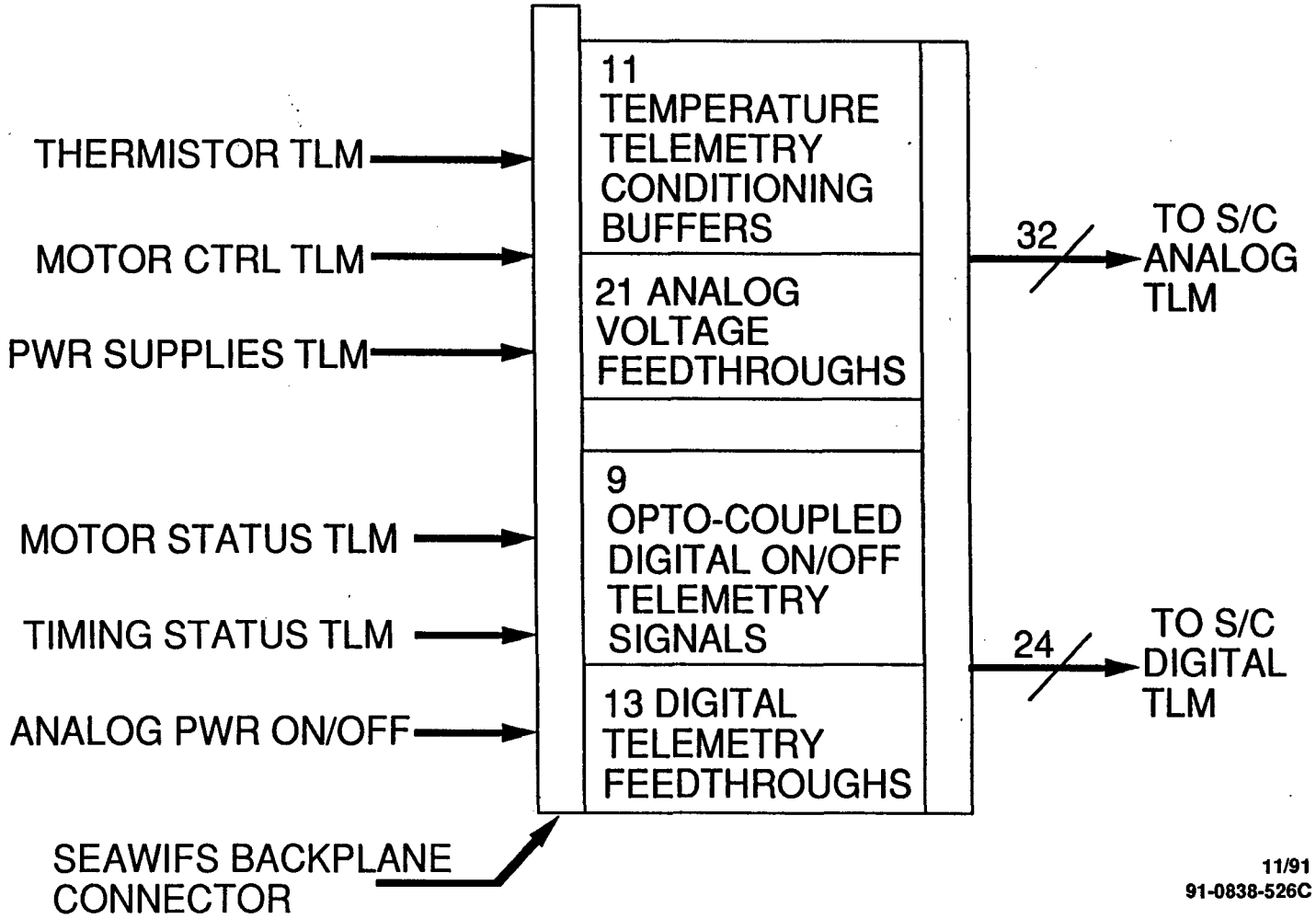

11/91
91-0838-526C

	CONNECTOR 24 & 25		CONNECTOR 24 & 25		CONNECTOR 24 & 25
PIN	NAME	PIN	NAME	PIN	NAME
1	ANALOG SHIELD 1	35	PS RTN	69	DIGITAL TLMY RTN
2	BAND 1/2 FPA TEMP	36	NO CONNECTION	70	TMG A SELECTED
3	BAND 3/4 FPA TEMP	37	NO CONNECTION	71	HEATERS ON
4	BAND 5/6 FPA TEMP	38	NO CONNECTION	72	SOLAR DOOR OPEN
5	BAND 7/8 FPA TEMP	39	NO CONNECTION	73	ANALOG PWR ON
6	SCANNER TEL MTR TEMP	40	NO CONNECTION	74	EARTH DATA MODE ON
7	TILT PLATFORM TEMP	41	NO CONNECTION	75	VIDEO DATA SYNC
8	SCANBASE (TILT) TEMP	42	NO CONNECTION	76	ANALOG SHIELD 2
9	SCAN HALF ANG MTR TLMY	43	NO CONNECTION	77	TILT POSITION
10	TEMP RTN	44	NO CONNECTION	78	POS 30V MTR PWR TLMY
11	NO CONNECTION	45	SERVO A SELECTED	79	POS 21V MTR PWR TLMY
12	NO CONNECTION	46	SERVO A LOCKED	80	ANG MOM PHASE ERROR
13	NO CONNECTION	47	SERVO B LOCKED	81	NEG 21V MTR PWR TLMY
14	NO CONNECTION	48	STOW ON	82	ELEX MOD (A8) TEMP
15	NO CONNECTION	49	STOW ALIGNED	83	TILT PLATFORM POSITION
16	NO CONNECTION	50	HALF ANG MIRROR SIDE	84	SPARE 1
17	NO CONNECTION	51	DIGITAL SHIELD 2	85	MTR2 RTN
18	NO CONNECTION	52	SERVO A PHASE ERROR	86	NO CONNECTION
19	DIGITAL TLMY RTN	53	SERVO B PHASE ERROR	87	NO CONNECTION
20	ANG MOM ON	54	TEL SERVO A MTR CURRENT	88	NO CONNECTION
21	TILT FWD LMT	55	TEL SERVO B MTR CURRENT	89	NO CONNECTION
22	TILT REV LMT	56	HALF ANG A MTR CURRENT	90	NO CONNECTION
23	TILT 0 DEG ALIGNED	57	HALF ANG B MTR CURRENT	91	NO CONNECTION
24	TILT POS 20 DEG ALIGNED	58	ANG MOM A MTR CURRENT	92	NO CONNECTION
25	TILT NEG 20 DEG ALIGNED	59	ANG MOM B MTR CURRENT	93	NO CONNECTION
26	DIGITAL SHIELD 1	60	MTR1 RTN	94	TILT A ON
27	PS A INPUT CURRENT	61	NO CONNECTION	95	TILT B ON
28	PS B INPUT CURRENT	62	NO CONNECTION	96	TILT TLMY ON
29	ELEX MOD (PS) TEMP	63	NO CONNECTION	97	SPARE 1
30	POS 15V ANALOG PWR TLMY	64	NO CONNECTION	98	SPARE 2
31	POS 5V LOGIC PWR TLMY	65	NO CONNECTION	99	SPARE 3
32	NEG 15V ANALOG PWR TLMY	66	NO CONNECTION	100	CHASSIS BRAID
33	POS 5V MTR PWR TLMY	67	NO CONNECTION		
34	ELEX MOD (A2) TEMP	68	NO CONNECTION		
					JW 11/22/91

HUGHES

SANTA BARBARA RESEARCH CENTER
a subsidiary

TELEMETRY SIGNAL LIST

SeaWiFS™

11/91
91-0838-526D

SIMPLIFIED SERIAL COMMAND AND TELEMETRY BLOCK DIAGRAM

HUGHES

SANTA BARBARA RESEARCH CENTER
a subsidiary

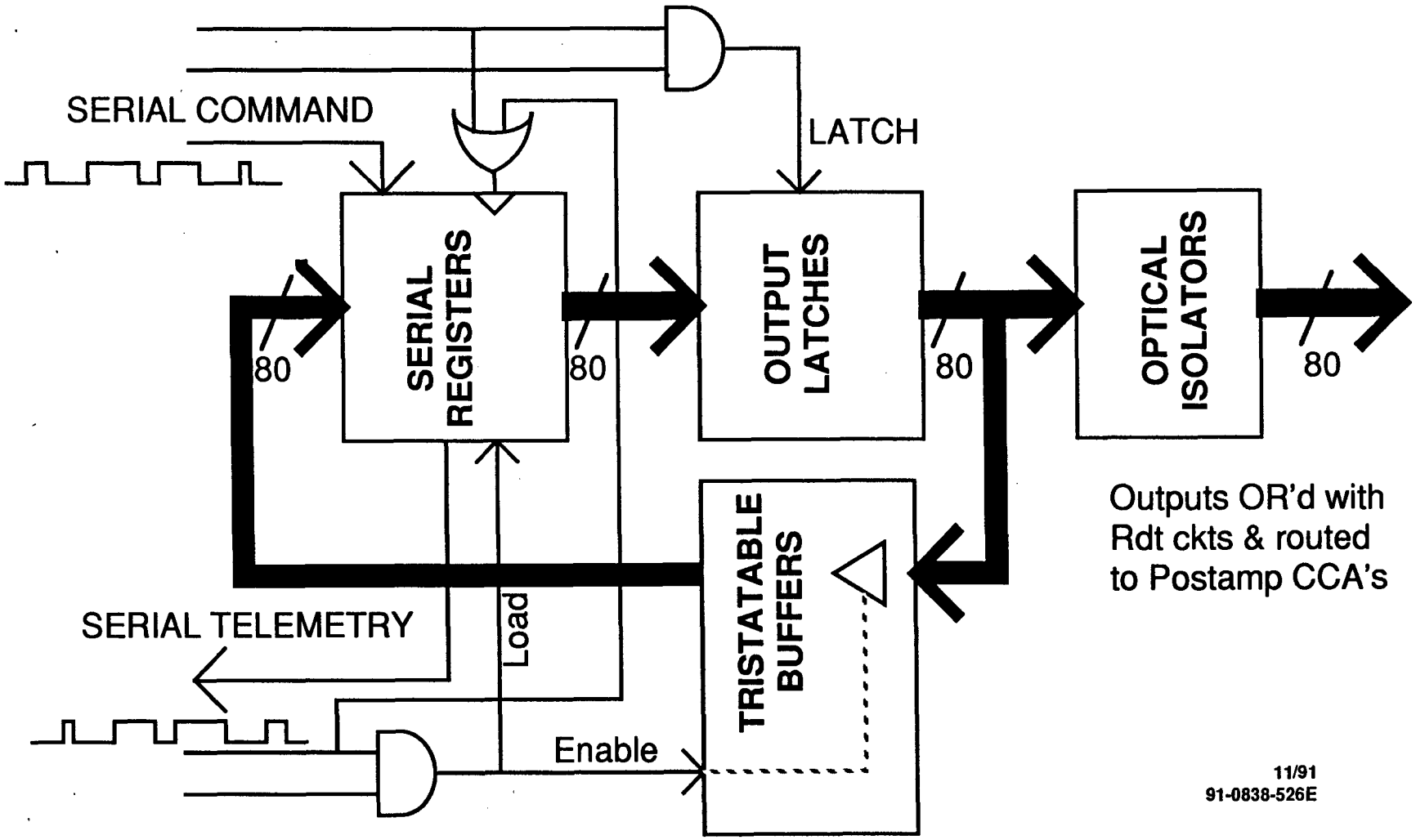

Outputs OR'd with Rdt ckts & routed to Postamp CCA's

11/91
91-0838-526E

SERIAL COMMAND ENABLE, CLOCK AND DATA WAVEFORMS

HUGHES

SANTA BARBARA RESEARCH CENTER
a subsidiary

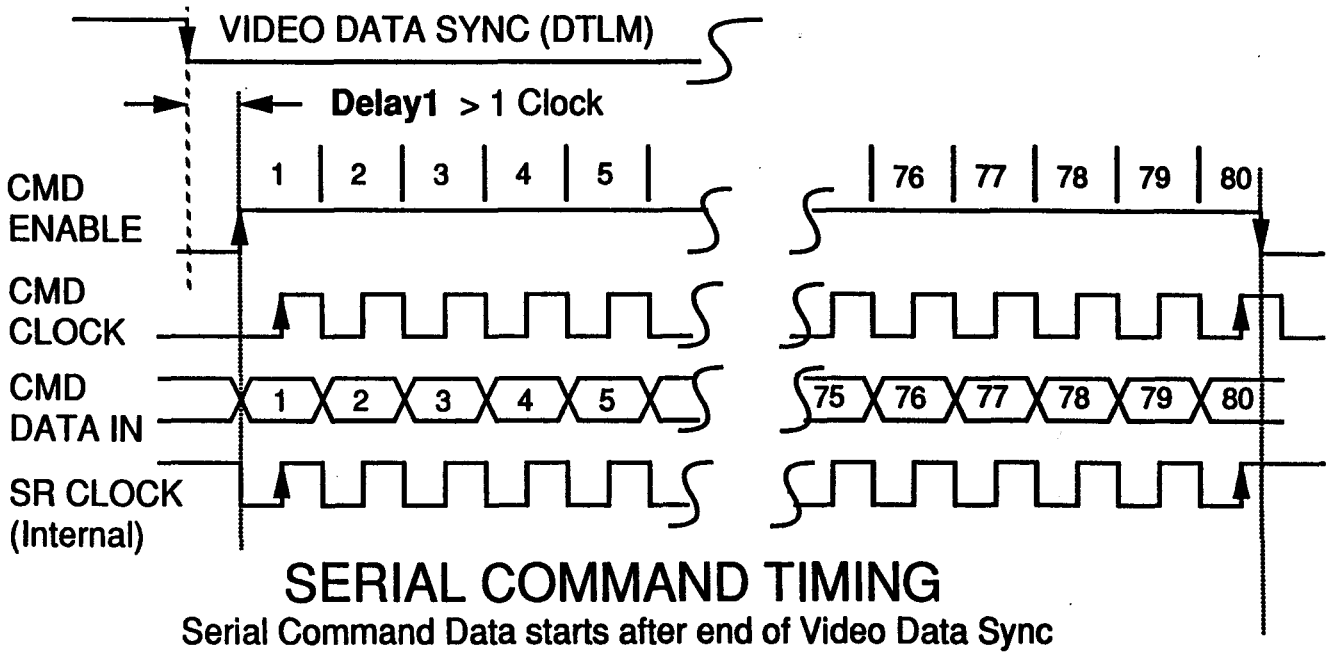

SERIAL COMMAND TIMING

Serial Command Data starts after end of Video Data Sync
- CMD Enable goes High and First CMD Data Bit sent

Clock goes High ~1/2 cycle later
- Serial Register clock input toggels data into register

CMD Data Changes at trailing edge of Clock

CMD Enable goes low BEFORE last (80th) clock goes low

Trailing edge of ENABLE (while Clock is High) latches Command Data from Serial Register into Parallel Output Latches

11/91
91-0838-526F

SERIAL TELEMETRY ENABLE, CLOCK AND DATA WAVEFORMS

HUGHES

SANTA BARBARA RESEARCH CENTER
a subsidiary

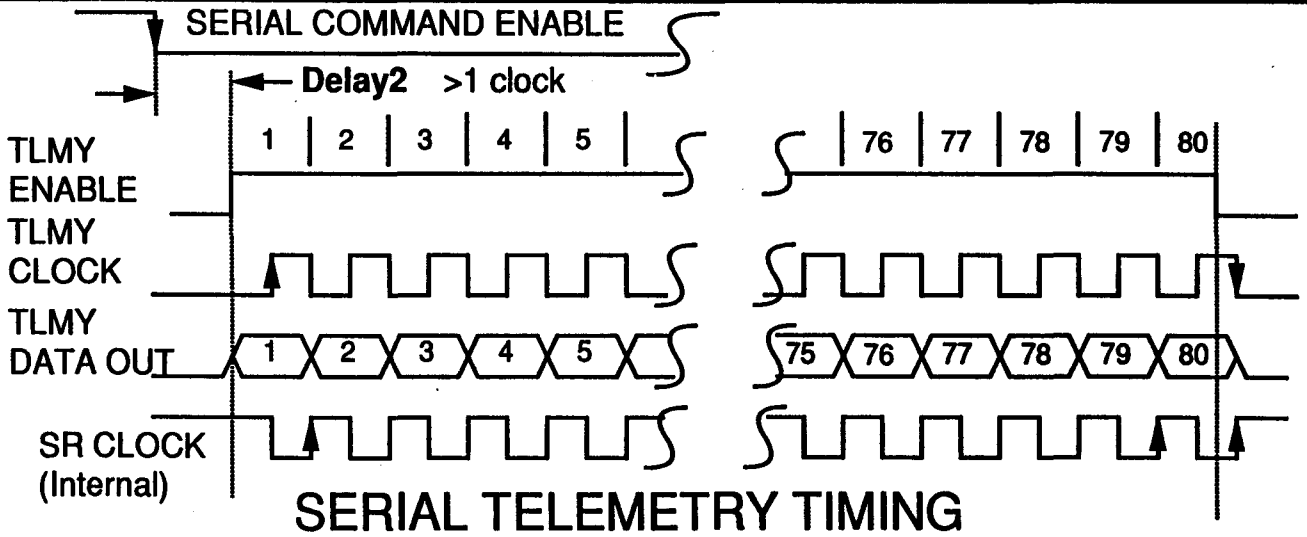

SERIAL TELEMETRY TIMING

Serial Telemetry Enable starts AFTER end of CMD Enable
TLM Enable goes High and First TLM Data Bit sent
Clock goes High ~1/2 cycle later
S/C circuit latches TLM Data Bit; SR clock goes low
TLM Clock goes Low and SR Clock goes high
serial register output changes to next TLM bit.
TLM Enable goes low after last (80th) clock goes high
but before clock would go LOW again
Trailing Edge of 80th Clock pulse, with ENABLE Low, causes the serial registers
to load the state of the latched parallel output registers via the tristatable buffers.

11/91
91-0838-526G

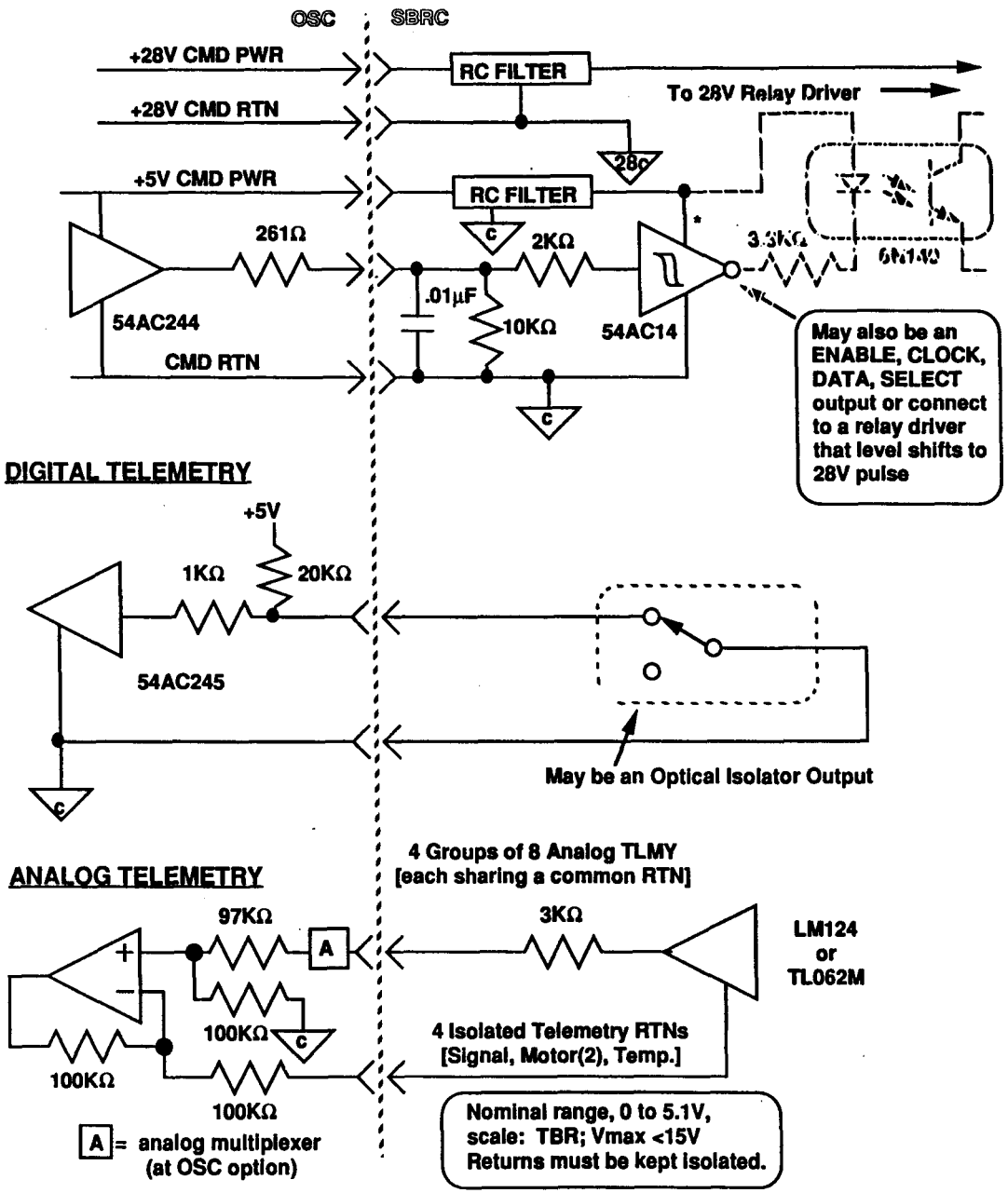

HUGHES

SANTA BARBARA RESEARCH CENTER
a subsidiary

COMMAND/ TELEMETRY INTERFACE

SeaWiFS

11/91
91-0838-526H

POWER SUPPLY

11/91
91-0838-527

CURRENT ORBIT AVERAGE POWER ESTIMATE IS BASED ON MOTORS RUNNING CONTINUOUSLY

HUGHES

SANTA BARBARA RESEARCH CENTER
a subsidiary

POWER DRAWN FROM SPACECRAFT BUS

OPERATING MODE	NOMINAL (11/22/91)	WORST CASE	GOAL (9/15/91)
IMAGING	58	110	<88
IMAGING AND TILT	68	124	<95
ECLIPSE	30	40	<40
SAFE STATE	15	15	~15
ORBIT AVERAGE, 40% IMAGING AND 60% ECLIPSE	41.2W	68W	<60W

ASSUMPTIONS:

- 65% EFFICIENT POWER SUPPLY
- NOMINAL BEARING DRAG 4 IN.-OZ; WORST CASE 8 IN.-OZ
- WORST CASE NUMBERS USE MANUFACTURER'S WORST CASE POWER
- SAFE STATE THERMAL SWITCH ~0°C; 0 WATTS ASSUMED FOR ORBIT AVERAGE

POWER SUPPLY OUTPUT VOLTAGES

HUGHES

SANTA BARBARA RESEARCH CENTER
a subsidiary

LOAD	SUPPLY VOLTAGES (V)			
	O. C.	PARTIALLY LOADED		
	MAX	MAX	NOM	MIN
+30V MOTOR	+33.0	+31.5	+30.0	+28.5
+21V SERVO	+24.0	+22.0	+21.0	+20.0
–21V SERVO	–24.0	–22.0	–21.0	–20.0
+5V SERVO	+6.0	+5.4	+5.0	+4.6
+15V ANALOG	+18.0	+15.50	+15.25	+15.00
–15V ANALOG	–18.0	–15.50	–15.25	–15.00
+5V LOGIC	+6.0	+5.4	+5.0	+4.6

11/91
-527B

POWER SUPPLY DESIGN LIMITS RELAY CONTACT SURGE CURRENT

HUGHES

SANTA BARBARA RESEARCH CENTER
a subsidiary

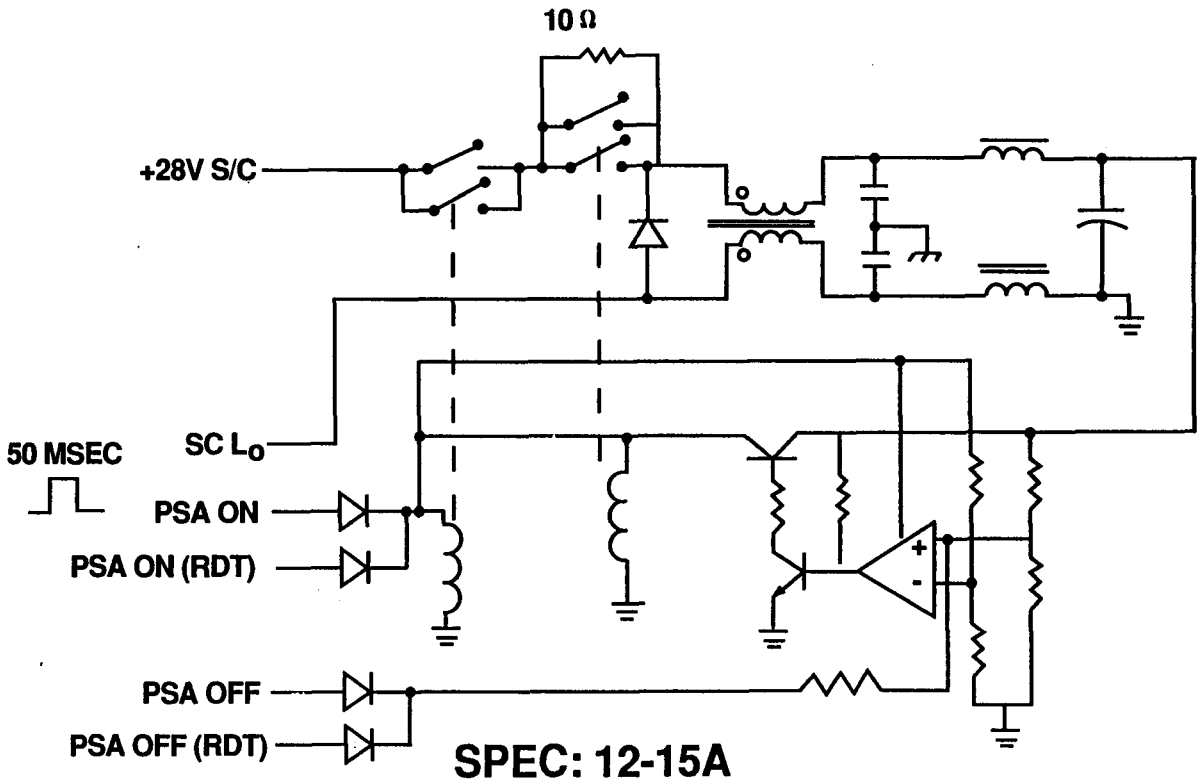

SPEC: 12-15A
RELAY RATINGS: 10A
EXPECTED: 2.8 TO 4.5A

11/91
91-0838-527C

POWER SUPPLY BLOCK DIAGRAM

HUGHES

SANTA BARBARA RESEARCH CENTER
a subsidiary

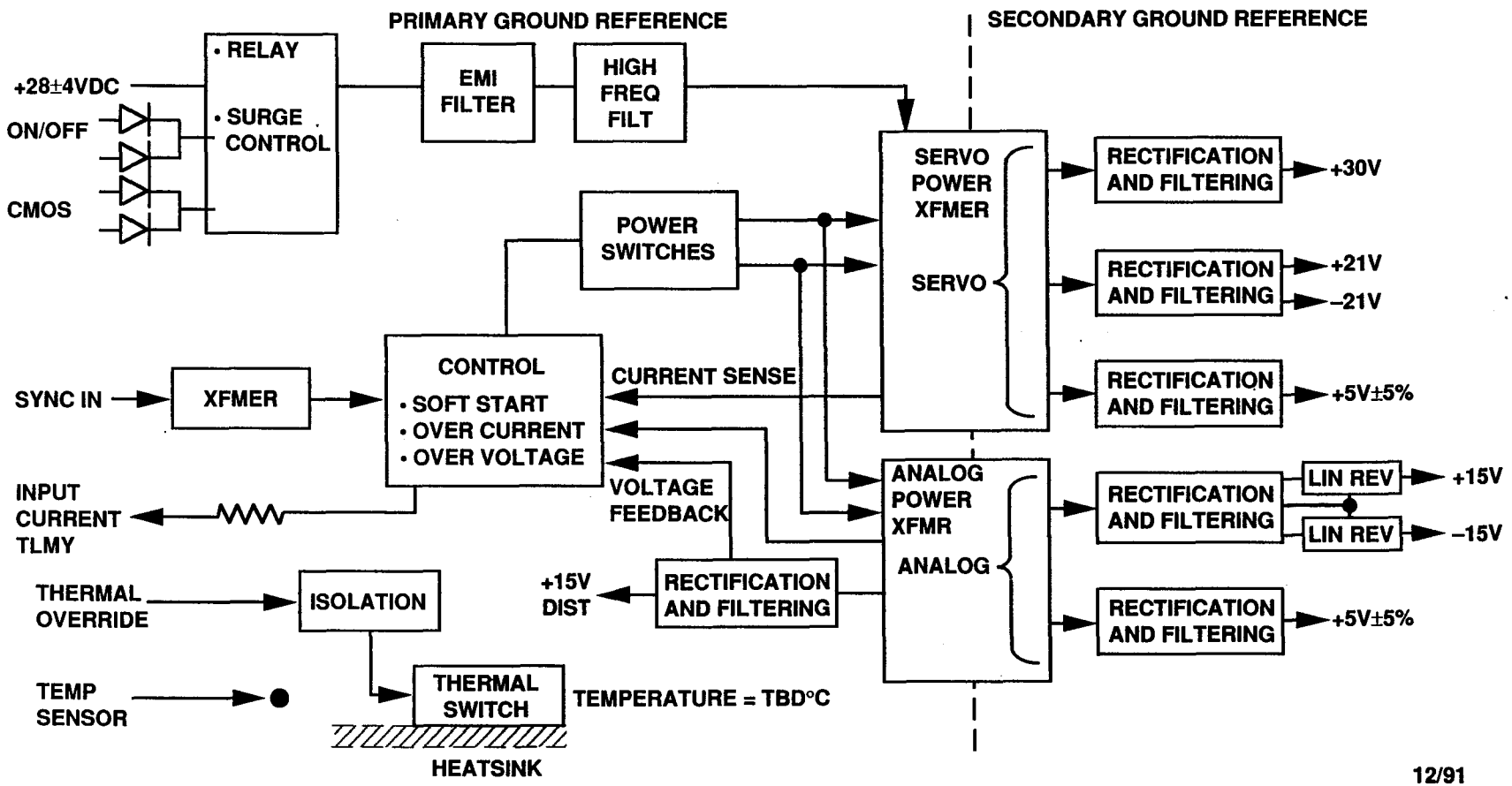

12/91
91-0838-527D

STATUS OF BREADBOARD TESTING

11/91
91-0838-528

ANALOG CIRCUITS

HUGHES

SANTA BARBARA RESEARCH CENTER
a subsidiary

- FPA/TIA
  - BREADBOARD TESTED
    - VENDOR ONE DETECTORS HAVE SLIGHT NOISE BOOST DUE TO EXCESS CAPACITANCE
    - VENDOR TWO DETECTOR — FPA ASSEMBLIES IN TEST
- PREAMP
  - BREADBOARD TESTED WITH BREADBOARD FPA/TIA — PERFORMED AS EXPECTED
  - POD UNITS FABRICATED—IN TEST (11/91)
    - ENGINEERING PWB
  - INTERCONNECT AND PREAMP SCHEMATIC AND ARTWORK RELEASED
- POSTAMP
  - DUAL CHANNEL BREADBOARD TESTED — PERFORMED AS EXPECTED
  - TDI CIRCUIT (EDU COMPATIBLE) BUILT AND TESTED
  - A/D CONVERTER ISSUES ARE BEING ADDRESSED (RADIATION)

DIGITAL CIRCUITS

HUGHES

SANTA BARBARA RESEARCH CENTER
a subsidiary

- TIMING
  - EDU CARD BUILT AND TESTED
  - SCHEMATIC NETLIST RELEASED FOR LAYOUT
- COMMAND/TELEMETRY
  - EDU CARD IN FABRICATION (DUE 11/29/91)
  - SCHEMATIC NETLIST RELEASED FOR PRELIMINARY LAYOUT

EDU ELECTRONICS STATUS

HUGHES

SANTA BARBARA RESEARCH CENTER
a subsidiary

- SCANNER
  - POD ARRAYS IN HOUSE (1st VENDOR)
  - ENGR MODEL PREAMPS PWBs IN HOUSE
  - ENGR MODEL INTERCONNECT PWBs IN HOUSE
  - ENGR MODEL COMPONENTS ON ORDER
  - NONFLIGHT SUBSTRATES READY TO FAB
- ELECTRONICS MODULE
  - CARD CAGE AND BARE WIREWRAP BOARDS IN HOUSE
  - TIMING CAGE BUILT AND TESTED
  - TDI CARD BUILT AND TESTED
    - (TDI CARD WILL BE REPLACED WITH ENGR PWB POSTAMP CARD)
  - PS EMULATOR (AC TO DC POWER MODULE) IN FABRICATION
- COMMENTS
  - ALL SCANNER ELECTRONICS FOR EDU CAN BE FABRICATED IN LESS THAN TWO WEEKS ONCE SUBSTRATES AND COMPONENTS ARRIVE
  - TURN-AROUND TIME FOR EDU WIREWRAP CARDS ~3 WEEKS (SLIGHTLY MORE IF COMPONENT AREA EXCEEDS AVAILABLE CARD SPACE)
  - TDI AND TIMING CARDS TO BE INSTALLED FIRST AND INTERWIRED IN BACKPLANE

ELECTRONICS MODULE PACKAGING DESIGN

STEVE HERNANDEZ

11/91
91-0838-600

ELECTRONICS MODULE

HUGHES

SANTA BARBARA RESEARCH CENTER
a subsidiary

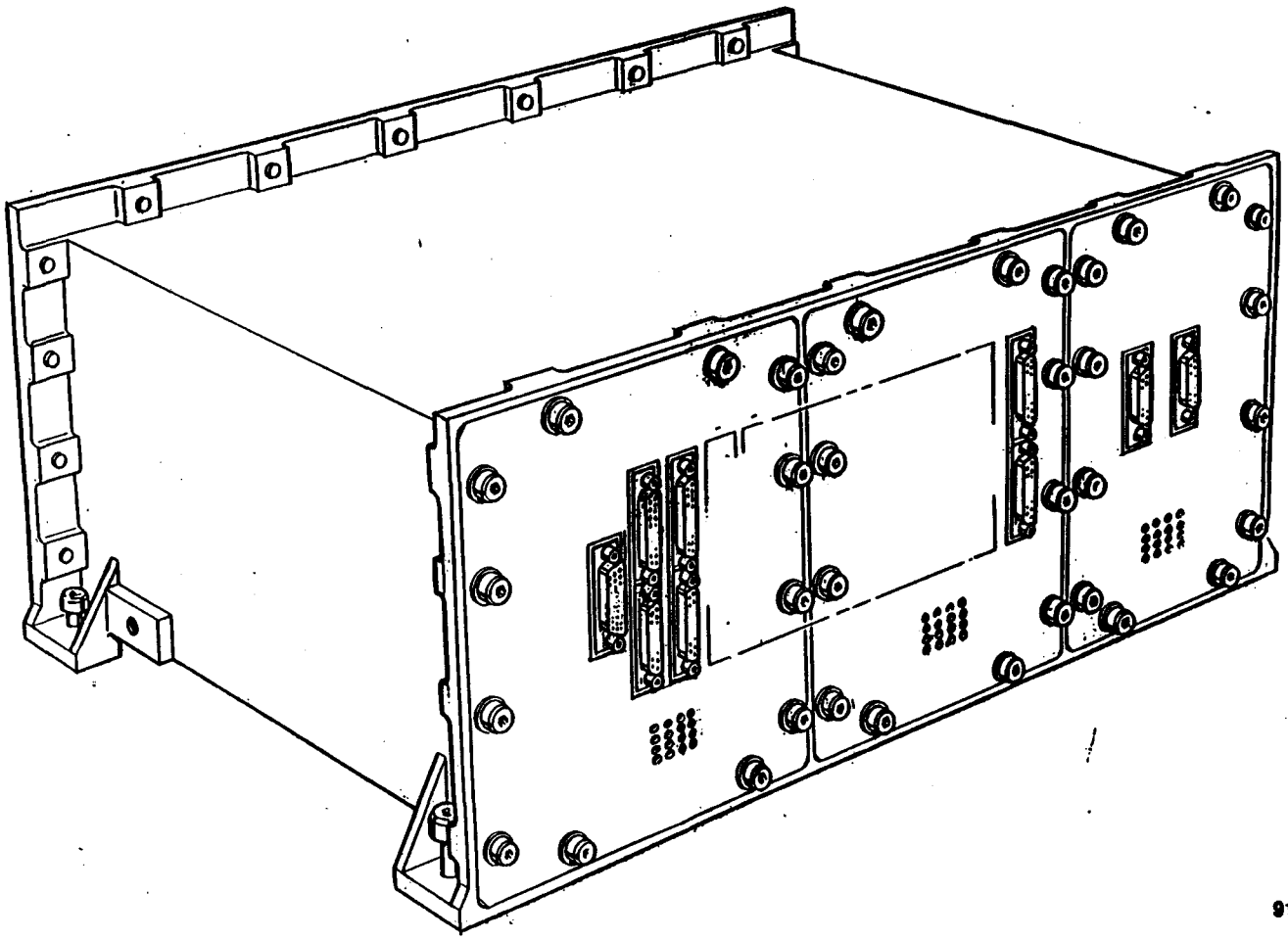

11/91
91-0838-601

ELECTRONICS MODULE REQUIREMENTS

HUGHES

SANTA BARBARA RESEARCH CENTER
a subsidiary

- STRUCTURE
- WEIGHT AND VOLUME NTE 50 LB
- TESTING
- ACCESSIBILITY
- REPAIRABILITY
- SHIELDING
  - RADIATION
  - EMI
  - RFI
- SPACECRAFT MOUNTING

CIRCUIT CARD ASSEMBLY CONDUCTS HEAT TO EM WALL

HUGHES

SANTA BARBARA RESEARCH CENTER
a subsidiary

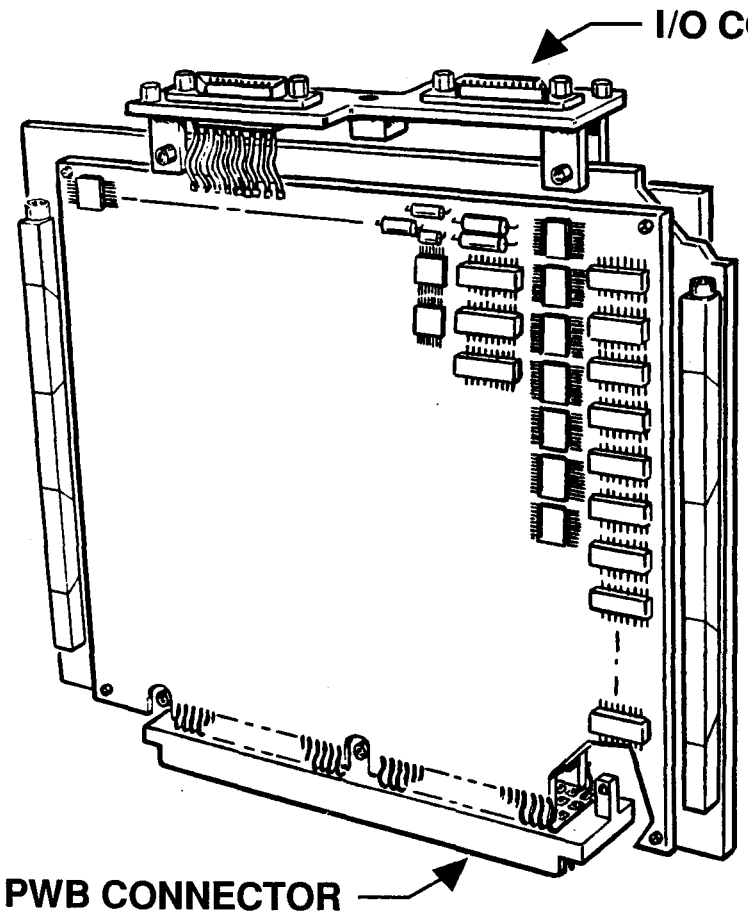

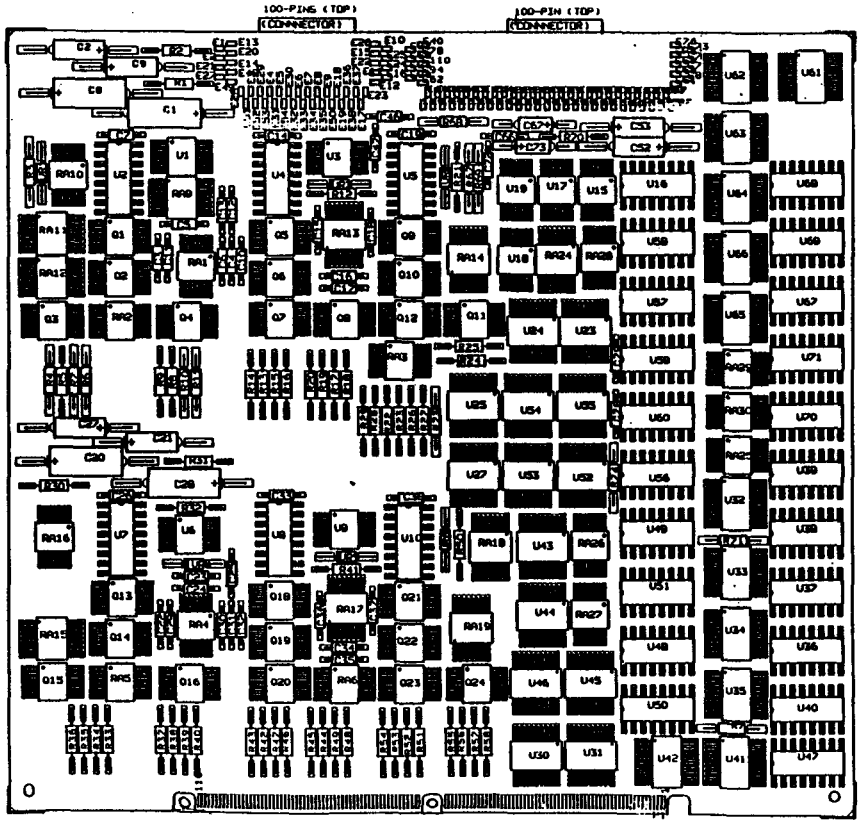

11/91
91-0838-602

MODULE DESIGN TAILORED TO SeaWiFS MISSION

HUGHES

SANTA BARBARA RESEARCH CENTER
a subsidiary

- ELECTRICAL
  - REDUCE CROSSTALK
  - MINIMIZE COHERENT NOISE
  - CONTROL TEMPERATURE
  - SHIELD RADIATION
- MECHANICAL
  - SIMPLIFY STRUCTURE AND ASSEMBLY
  - MINIMIZE WEIGHT AND VOLUME
  - MINIMIZE COMPLEXITY OF WIRING
  - STANDARDIZE CCA DESIGN
  - SURFACE MOUNTED TECHNOLOGY TO REDUCE SIZE AND WEIGHT

CONVENTIONAL TECHNOLOGY USED IN ELECTRONICS MODULE DESIGN

HUGHES

SANTA BARBARA RESEARCH CENTER
a subsidiary

- UTILIZE MODULAR CONCEPTS TO FACILITATE ASSEMBLY AND TEST
- HOUSING FABRICATION
  - MACHINED/DIPBRAZE
- STANDARD PLUG-IN CCA DESIGN
  - 11 CCA; 5 UNIQUE CONFIGURATIONS
  - PRINTED WIRING BOARDS MAXIMUM PLANNED NUMBER OF LAYERS IS 8
  - STANDARD LINE WIDTH/SPACING 0.010/0.010 INCHES
  - 0.06 THICK POLYIMIDE BOARDS
- SURFACE MOUNTED COMPONENTS PROVIDE HIGHER RELIABILITY
  - LEADED COMPONENTS (RESISTORS AND CAPACITORS) MOUNTED ON SURFACE
  - SURFACE MOUNT ICs USED
  - PLATED-THROUGH HOLES MINIMIZED
- BACK PLANE
  - WIRE WRAP — MINIMIZE SCHEDULE RISK
- POWER SUPPLY
  - MODULAR PLUG-IN PACKAGE
  - SIMILAR TO CCA DESIGN

DESIGN ALLOWS EASY ACCESS TO ALL AREAS

HUGHES

SANTA BARBARA RESEARCH CENTER
a subsidiary

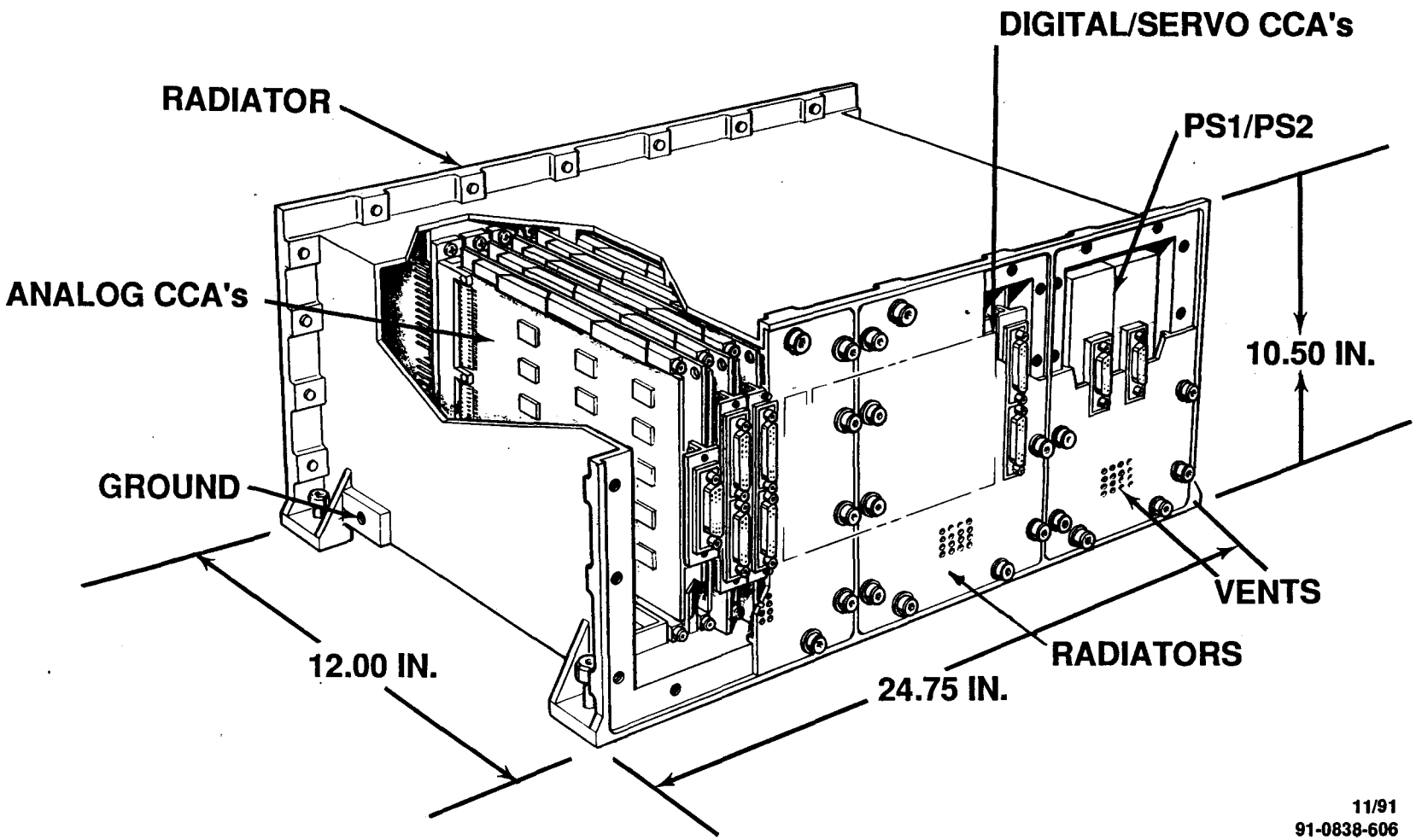

11/91
91-0838-606

INITIAL CIRCUIT CARD ASSEMBLY DEFINITION AND POWER DISSIPATION ESTIMATE

HUGHES

SANTA BARBARA RESEARCH CENTER
a subsidiary

QTY	REF DES	DESCRIPTION	EST NOMINAL POWER (W)
1	A1	TEST	<1
4	A2 - A5	POSTAMP	24
	A6	SPARE	
	A7	SPARE	
1	A8	TIMING & DATA	2
2	A9 - A10	SERVO MECH. DRIVES	10
1	A11	ANGULAR MOMENTUM AND TILT DRIVES	5 (8)
2	A12 - 13	COMMAND/TELEMETRY	1*
2	PS1 - PS2	POWER SUPPLY	25 (30)

* POWER DISSIPATION FROM EM, BUT NOT DRAWN FROM THE P/S

() INDICATES TILT ON

11/91
91-0838-607

CIRCUIT CARD ASSEMBLY USES TWO PRINTED WIRING BOARDS BONDED TO A COMMON HEATSINK

HUGHES

SANTA BARBARA RESEARCH CENTER
a subsidiary

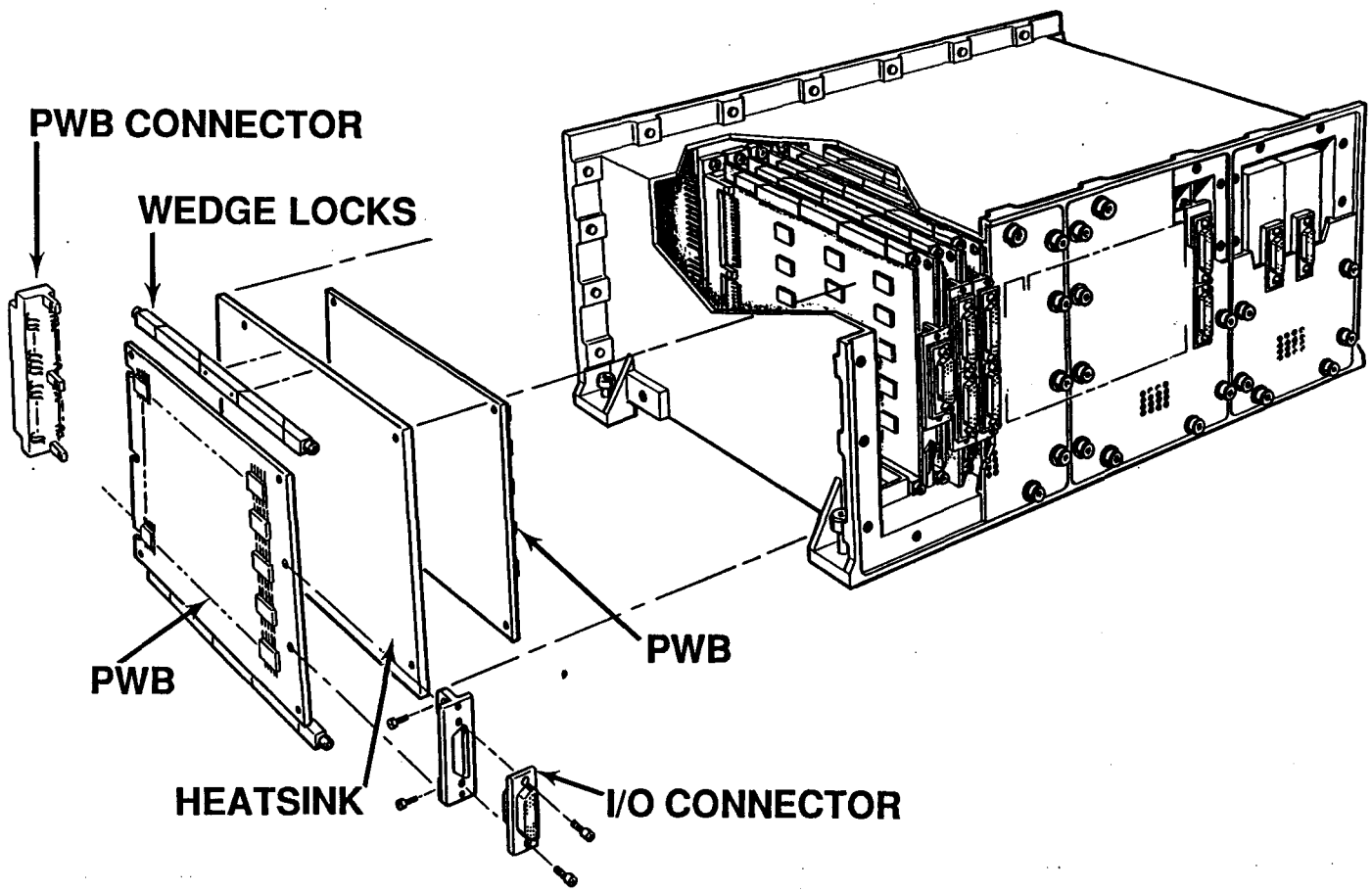

11/91
91-0838-608

CONNECTOR TYPES

HUGHES

SANTA BARBARA RESEARCH CENTER
a subsidiary

HIGH RELIABILITY, MIL-C-83513 SOLDER CUP, CRIMP, WIRED

230 POSITION CCA CONNECTOR

Plug

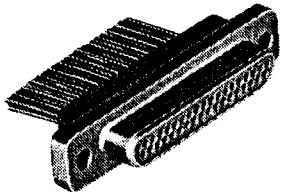

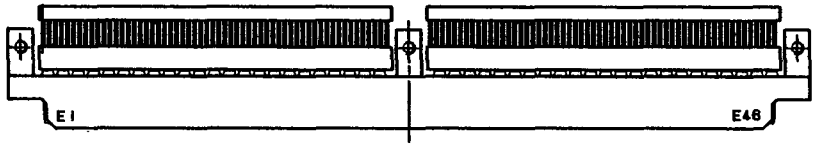

Receptacle

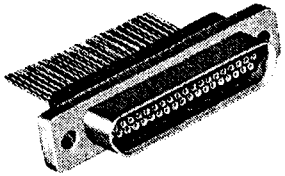

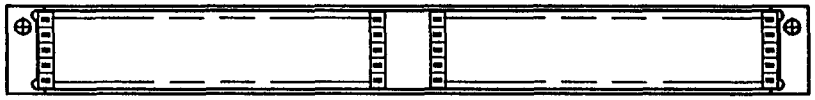

11/91
91-0838-609

ELECTRONIC MODULE MECHANICAL CHARACTERISTICS MEET SeaStar REQUIREMENTS

HUGHES

SANTA BARBARA RESEARCH CENTER
a subsidiary

	ESTIMATE (POUNDS)	NOT TO EXCEED (POUNDS)
• VOLUME (CUBIC INCHES)		
• 10.50 × 12.00 × 24.75 = 3,118		
• WEIGHT (ESTIMATE)		
• HOUSING ASSEMBLY (0.06 THICK AL ALY)	10.4	
• RADIATION COVERS	4.5	
• PWB ASSEMBLIES (11)	20.3	
• POWER SUPPLY	4.6	
• WIRING AND CONNECTORS	3.2	
• SUBASSEMBLIES AND MOUNTING HARDWARE	1.0	
TOTAL	44.0	50.0
• INTERCONNECT CABLES (12)	5.6	5.0
TOTAL WEIGHT	49.6 ±4	55.0

11/91
91-0838-610

STRUCTURE DESIGNED TO PROVIDE ADEQUATE RADIATION SHIELDING

HUGHES

SANTA BARBARA RESEARCH CENTER
a subsidiary

	TOTAL DOSE (kRADS)	HOUSING
ALUMINUM WALL THICKNESS (IN.)	5 YEARS	WT. DELTA
0.060	60	-
0.100	25	6.2
0.150	18	14.1
0.200	14	21.9
0.250	10	29.7
0.500	7	68.9

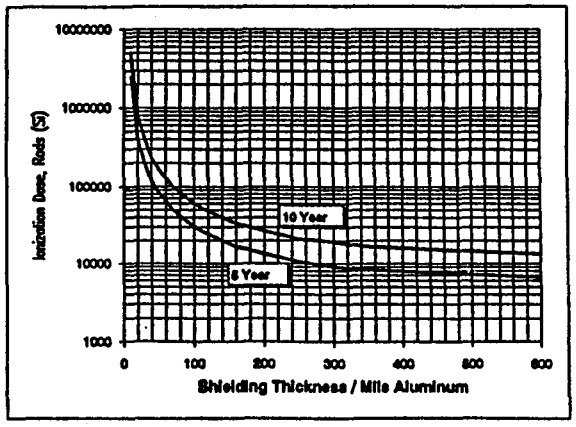

*

SEASTAR RADIATION DOSE-DEPTH CURVE

- DESIGN IS BASED ON 0.06-IN. THICK HOUSING WALLS
- RADIATION COVERS ARE 0.10 INCH THICK
- ADDITIONAL LOCALIZED SHIELDING WILL BE ADDED AS REQUIRED FOR COMPONENTS WITH RADIATION DOSE THRESHOLDS LESS THAN 50 kRADS
- STRUCTURAL RAY TRACE ANALYSIS WILL BE PERFORMED FOR CRITICAL DEVICE LOCATIONS PRIOR TO ADDING ADDITIONAL SHIELDING

* RADIATION DOSE ENVIRONMENT SPECIFICATION IS BEING REVISED.

MECHANICAL STRUCTURE INCORPORATES EMI SHIELDING

HUGHES

SANTA BARBARA RESEARCH CENTER
a subsidiary

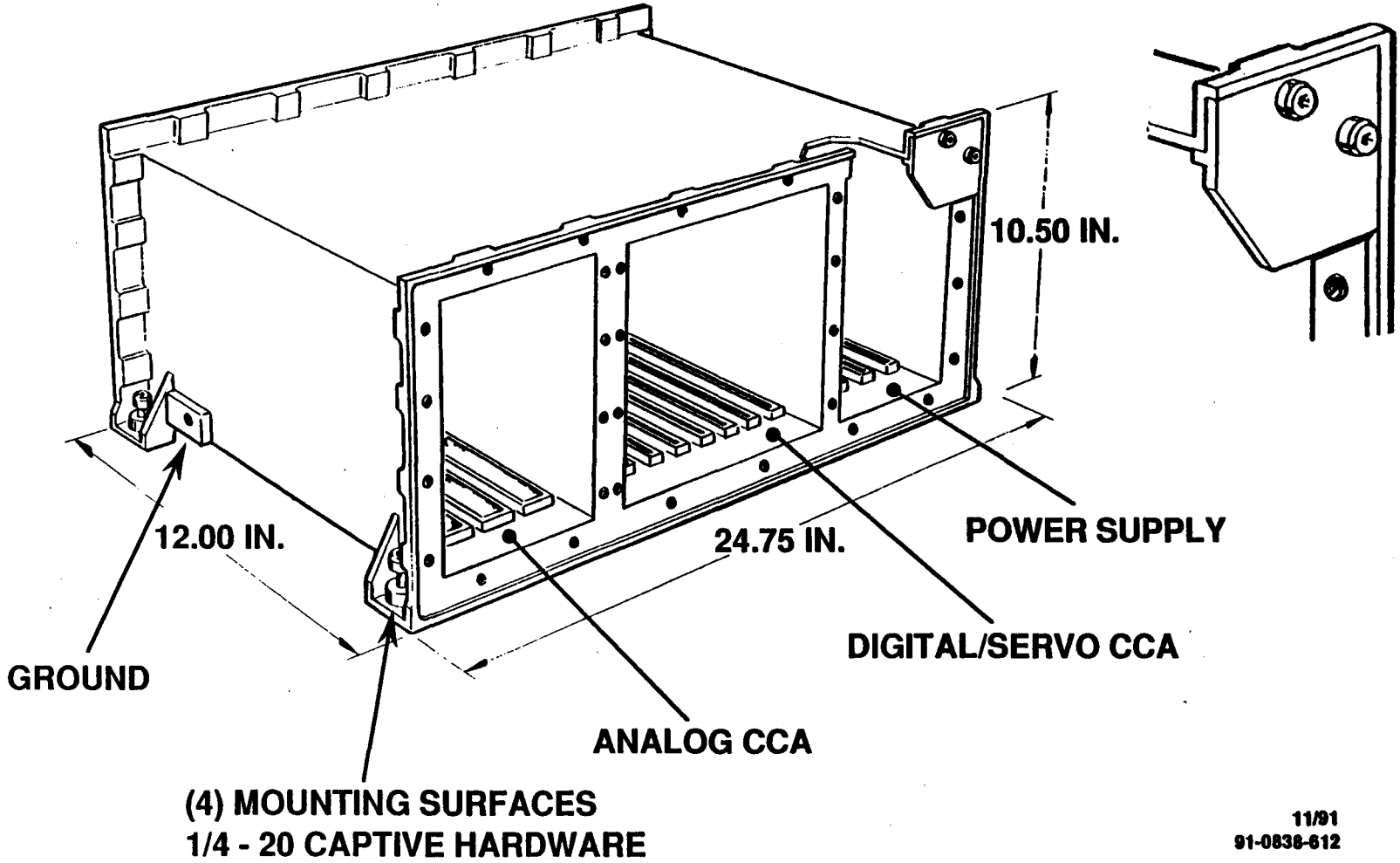

11/91
91-0838-612

FULL ACCESS TO BACKPLANE WIRING

HUGHES

SANTA BARBARA RESEARCH CENTER
a subsidiary

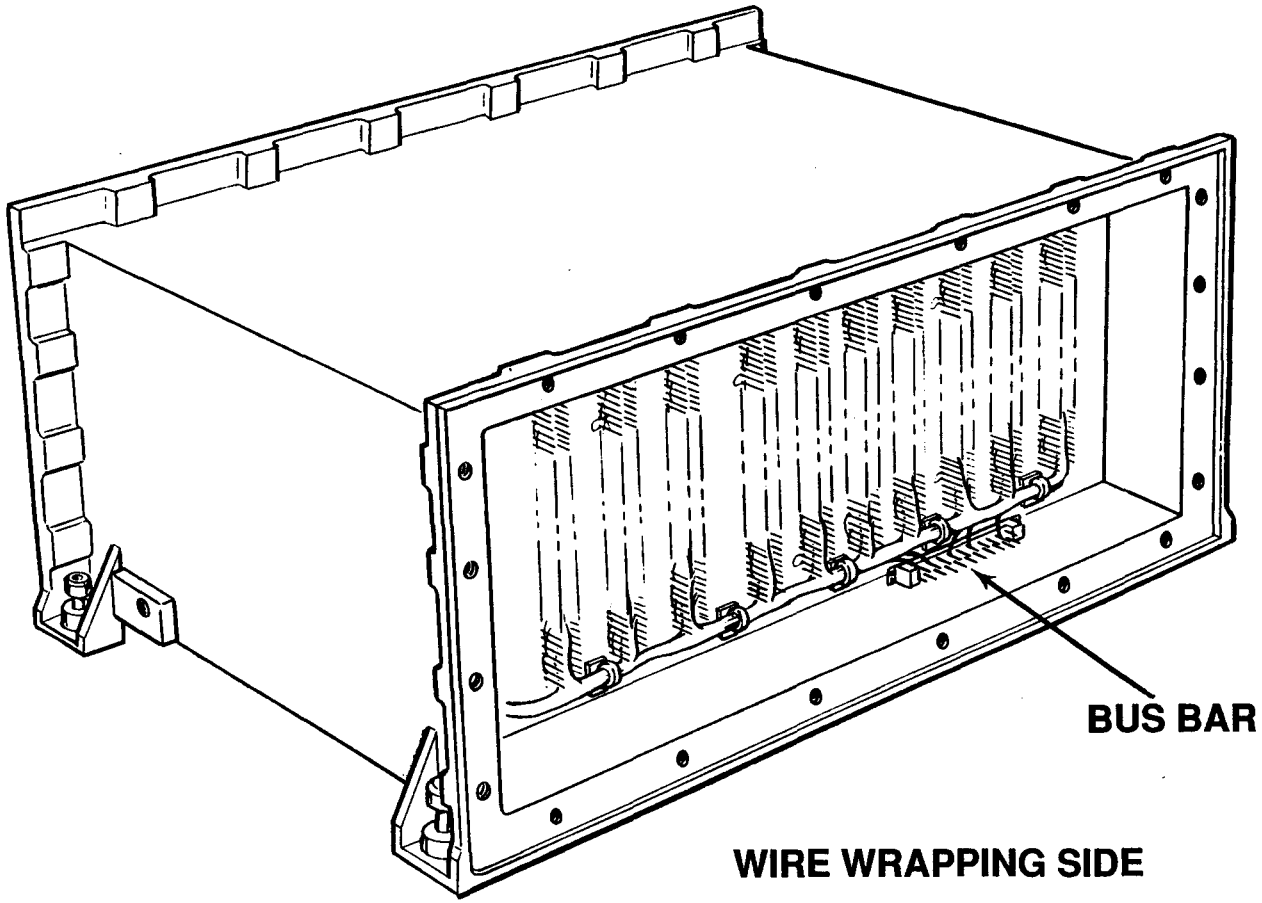

11/91
91-0838-613

INTERCONNECT CABLES MUST MINIMIZE PERTURBING FORCES ON TILTING COMPONENTS

HUGHES

SANTA BARBARA RESEARCH CENTER
a subsidiary

- 366 WIRES
- 12 CABLES
- UV SHIELDED
- EMI SHIELDED
- 53,000 CYCLES OF 40° BEND (TWICE PER ORBIT)
- FPA SIGNALS ROUTED SEPARATELY FROM MOTOR CABLES
- STRESS RELIEVED AT PIVOT AXIS
- VENDOR CONSULTATION INDICATES REQUIREMENTS CAN BE EASILY ACHIEVED — DESIGN IN PROCESS

INSTRUMENT INTERCONNECT WIRE ROUTING TO BE COORDINATED WITH OSC

HUGHES

SANTA BARBARA RESEARCH CENTER
a subsidiary

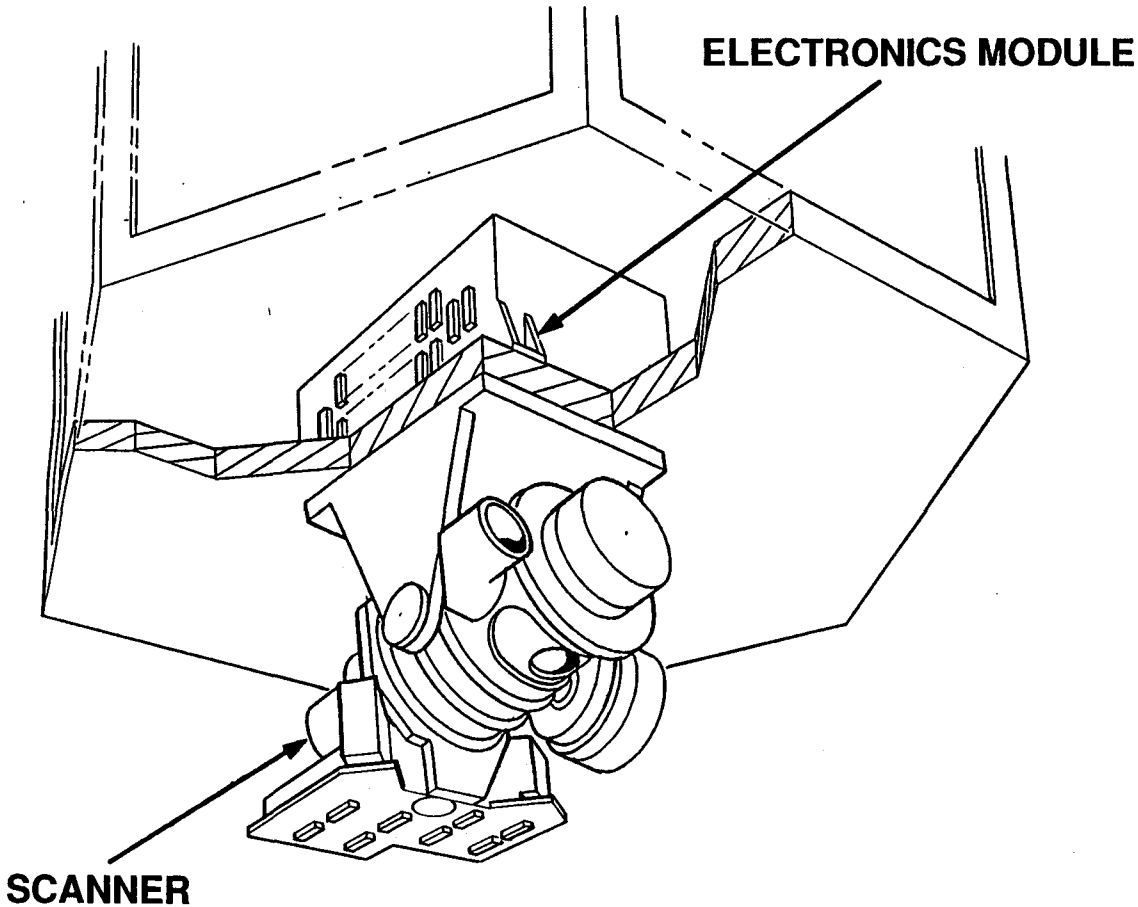

11/91
91-0838-614

MODULE TRANSPORTATION CONTAINER

HUGHES

SANTA BARBARA RESEARCH CENTER
a subsidiary

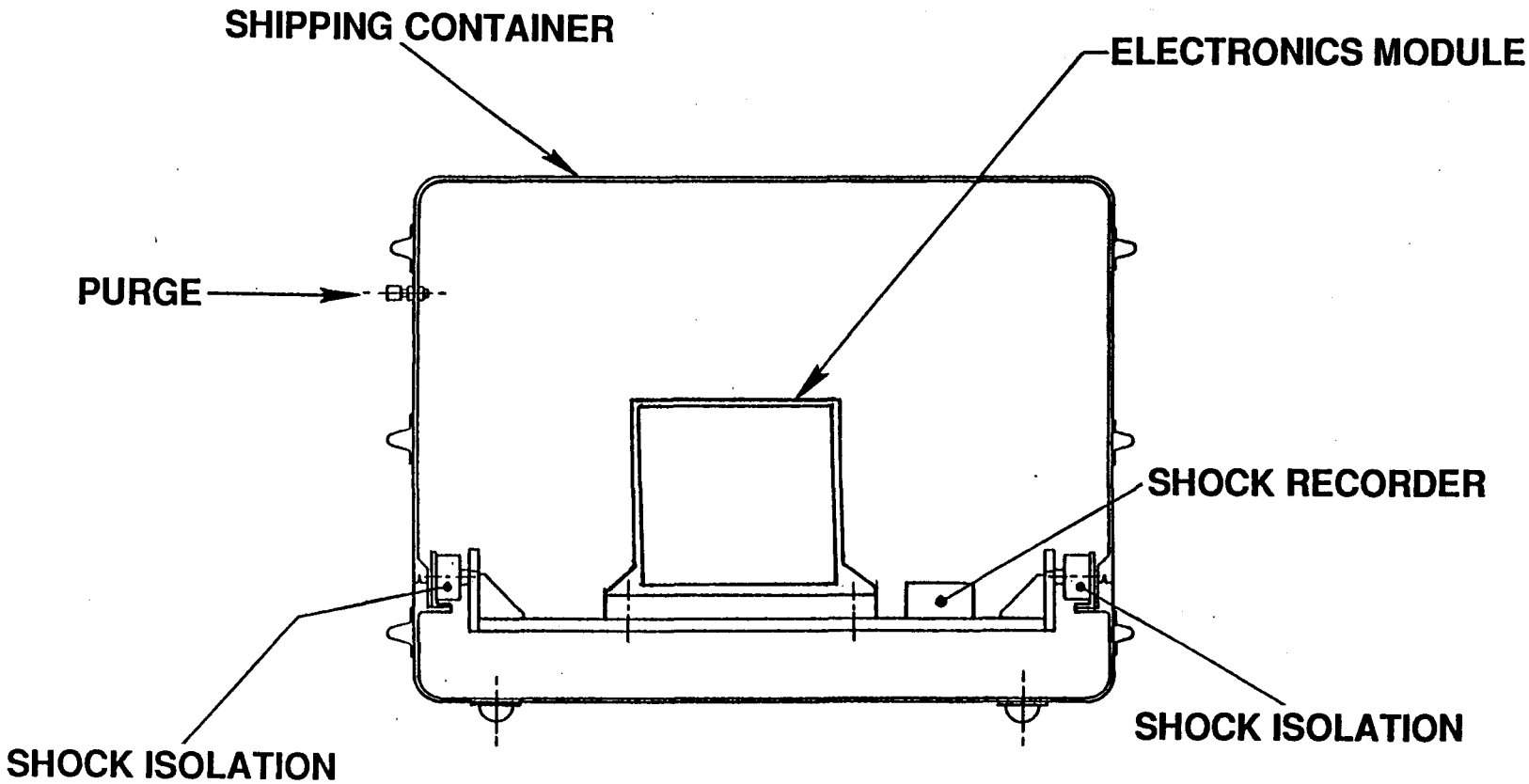

11/91
91-0838-615

ELECTRONIC MODULE STRUCTURAL ANALYSIS

PAUL BORTFELDT

11/91
91-0838-649

EM STRUCTURAL REQUIREMENTS ARE IDENTICAL TO THE SCANNER

HUGHES

SANTA BARBARA RESEARCH CENTER
a subsidiary

- EM DESIGNED TO SURVIVE ALL ANTICIPATED DYNAMIC ENVIRONMENTS
- QUASI-STATIC ACCELERATION
- RANDOM VIBRATION (QUAL LEVEL)
- PYROSHOCK
- GROUND HANDLING
- PRE-11/91 LEVELS USED FOR ANALYSIS. QUASI-STATIC ACCEL. AND PYROSHOCK HAVE SINCE BEEN REVISED

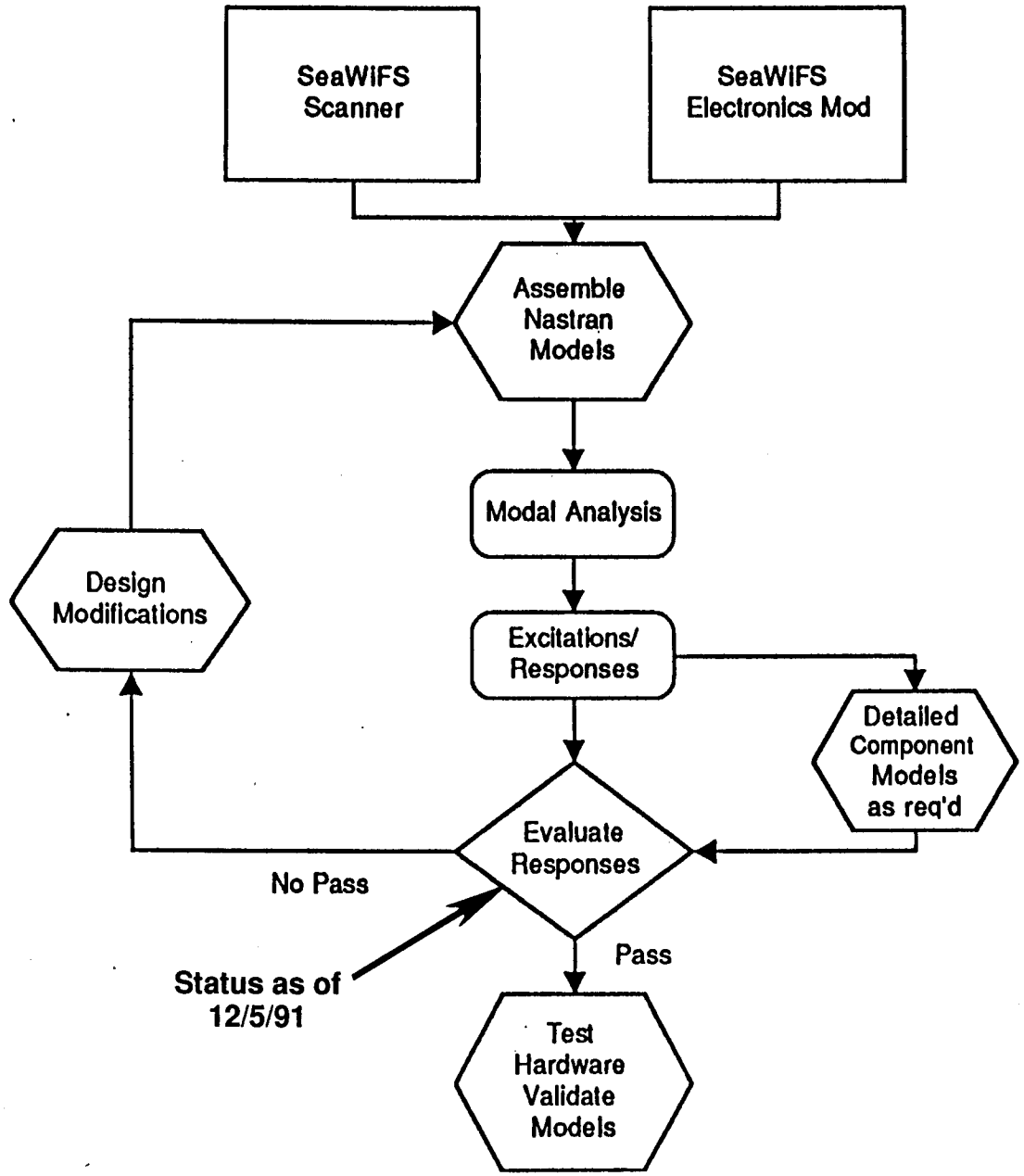

HUGHES

SANTA BARBARA RESEARCH CENTER
a subsidiary

ITERATIVE STRUCTURAL ANALYSIS TECHNIQUE ASSURES STRUCTURAL INTEGRITY

SeaWiFS

11/91
91-0383-651

FINITE ELEMENT METHOD USED IN EM STRUCTURAL ANALYSIS

HUGHES

SANTA BARBARA RESEARCH CENTER
a subsidiary

- NASTRAN FE MODEL
  - 838 NODES
  - 807 PLATE ELEMENTS
  - 168 BEAM ELEMENTS

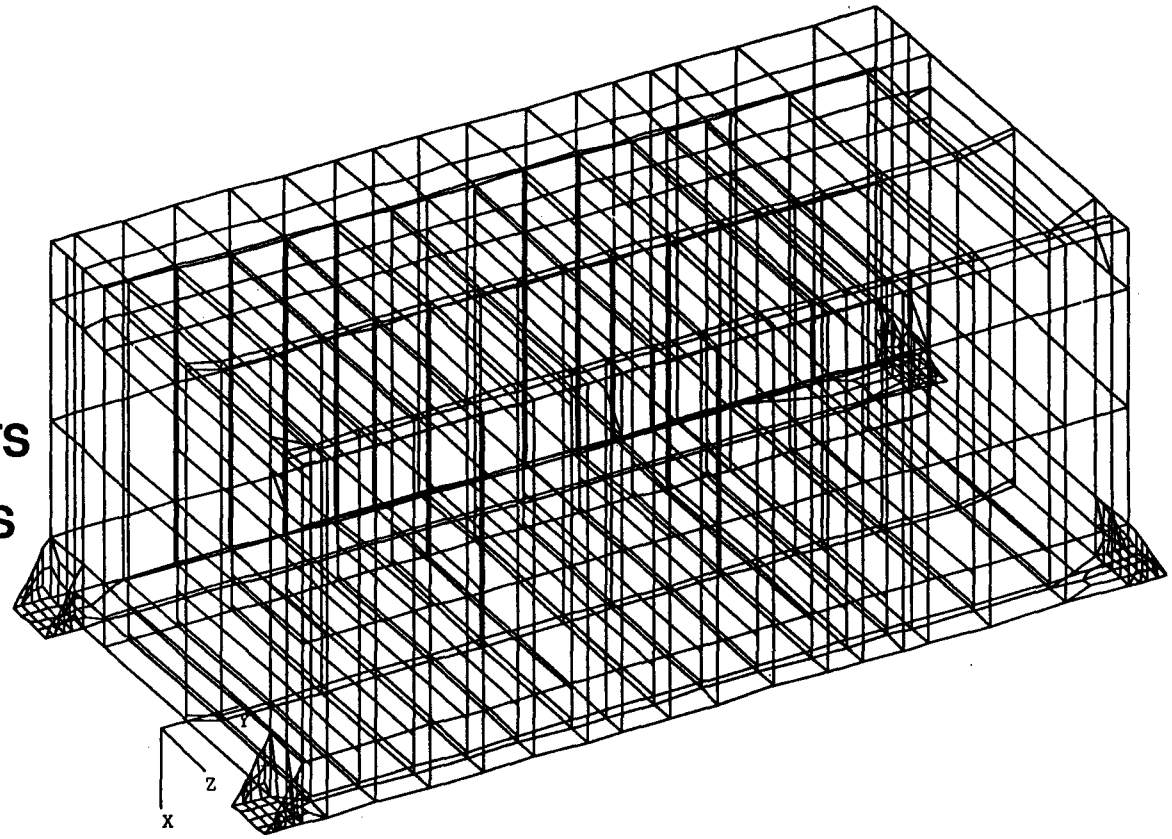

11/91
91-0838-652

FINITE ELEMENT MODEL INCLUDED DETAILS SUCH AS CIRCUIT CARDS AND MOUNTING FEET

HUGHES

SANTA BARBARA RESEARCH CENTER
a subsidiary

- FINITE ELEMENT MODEL
  - REFLECTS CURRENT DESIGN CONFIGURATION
  - EXERCISED FOR MODES, RANDOM, QUASISTATIC ACCELERATION, AND PYROSHOCK
  - "FIXED" AT FOUR MOUNTING FLANGES

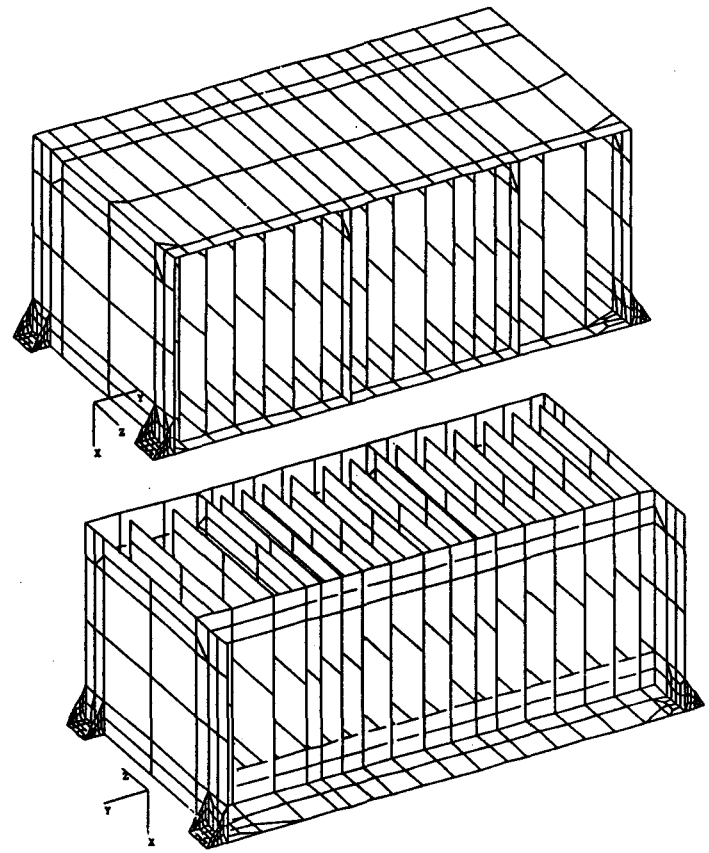

11/91
91-0838-653

MODAL WEIGHT IS A MEASURE OF THE AMOUNT OF MASS PARTICIPATING IN EACH VIBRATIONAL MODE

HUGHES

SANTA BARBARA RESEARCH CENTER
a subsidiary

- "MODAL MASS," MM, OF FIXED BASE SeaWiFS MODES GIVES INDICATION OF STRONGEST MODES:

$$MM_i = \rho_i^2 \overline{M}_i$$

FOR EACH MODE I (IN X, Y, OR Z TRANS. DIRECTIONS)

WHERE ρ_i IS THE i^{TH} MODAL PARTICIPATION FACTOR

AND $\overline{M}_i$ IS THE i^{TH} MODE GENERALIZED MASS TERM.

NOTE:

$$\rho_i = \frac{1}{\overline{M}_i} \sum_{j=1}^{N} \Phi_{ij} \; m_{ij}$$

$$[\overline{M}] = [\Phi]^T [m][\Phi]$$

11/91
91-0838-654

MODAL ANALYSIS REVEALS ELECTRONICS MODULE DYNAMIC CHARACTERISTICS

HUGHES

SANTA BARBARA RESEARCH CENTER
a subsidiary

- MODAL ANALYSIS PERFORMED ON EM

- FIXED BASE MODES OF THE EM
  - PRIMARY CIRCUIT CARD BENDING MODES ~ 130 TO 190 Hz
  - EM HOUSING X,Z FLEX MODES ~230 Hz
  - LOWEST EM MODE = 130 Hz

MOST SIGNIFICANT HOUSING FLEX MODE OCCURS AT 230 Hz

HUGHES

SANTA BARBARA RESEARCH CENTER
a subsidiary

- MODAL WEIGHT PLOT (3-AXIS)

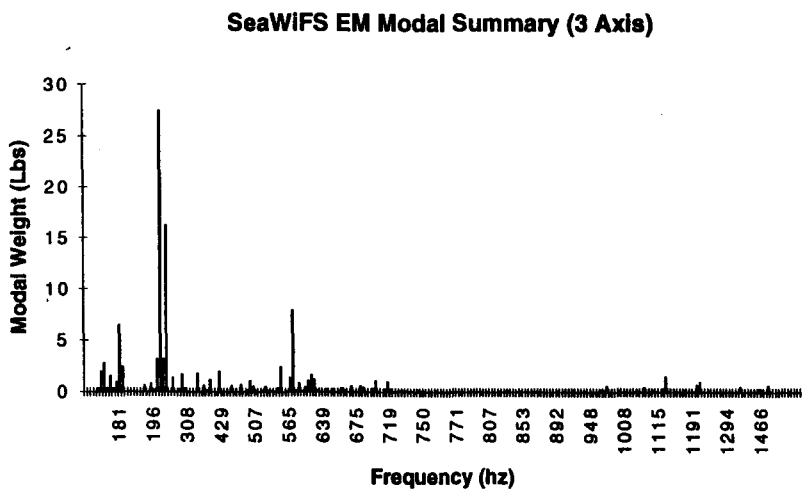

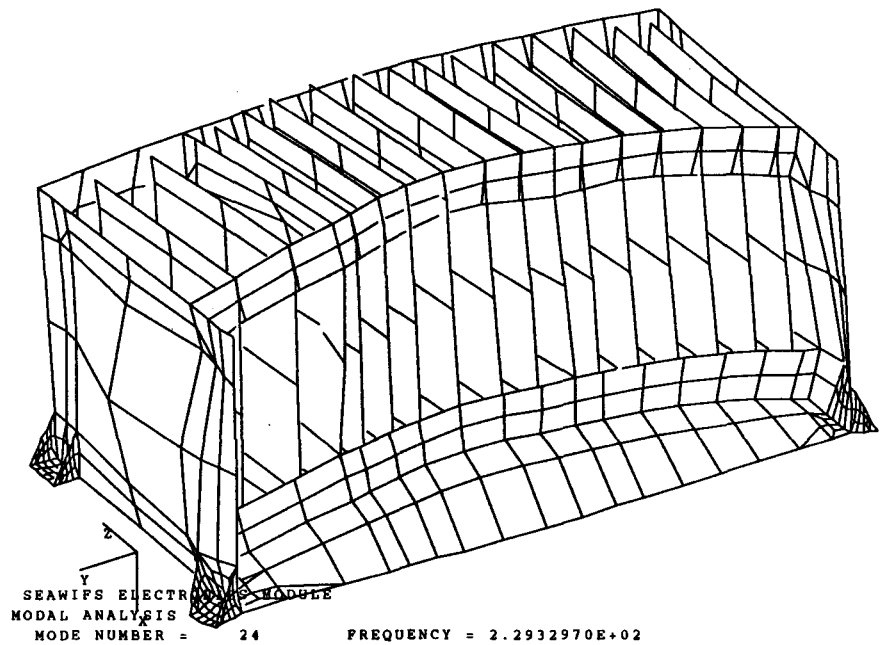

HOUSING AXIS FLEX MODE (230 Hz)

11/91
91-0838-656

EM HOUSING EXHIBITS ADEQUATE SAFETY MARGINS

HUGHES

SANTA BARBARA RESEARCH CENTER
a subsidiary

6061-T4 HOUSING:

EXCITATION		MAXIMUM STRESS LOCATION	PEAK VON MISES STRESS (psi)	FAILURE CRITERIA AND LIMIT (psi)	MARGIN OF SAFETY
QUASI-STATIC ACCELERATION	X	MOUNT FOOT	1030	$\sigma_T = 35000$	33.0
	Z	BASE PLATE	1156	$\sigma_T = 35000$	29.0
RANDOM VIBRATION (QUAL LEVEL)	X	MOUNT FOOT	1117 RMS	$\sigma_e = 14000$	12.0
	Y	BASE PLATE	426 RMS	$\sigma_e = 14000$	32.0
	Z	BASE PLATE	1104 RMS	$\sigma_e = 14000$	12.0
PYROSHOCK		BASE PLATE	13,800	$\sigma_T = 35000$	1.5
RANDOM + QUASI-STATIC ACCEL		BASE PLATE	2260	$\sigma_e = 14000$	5.2

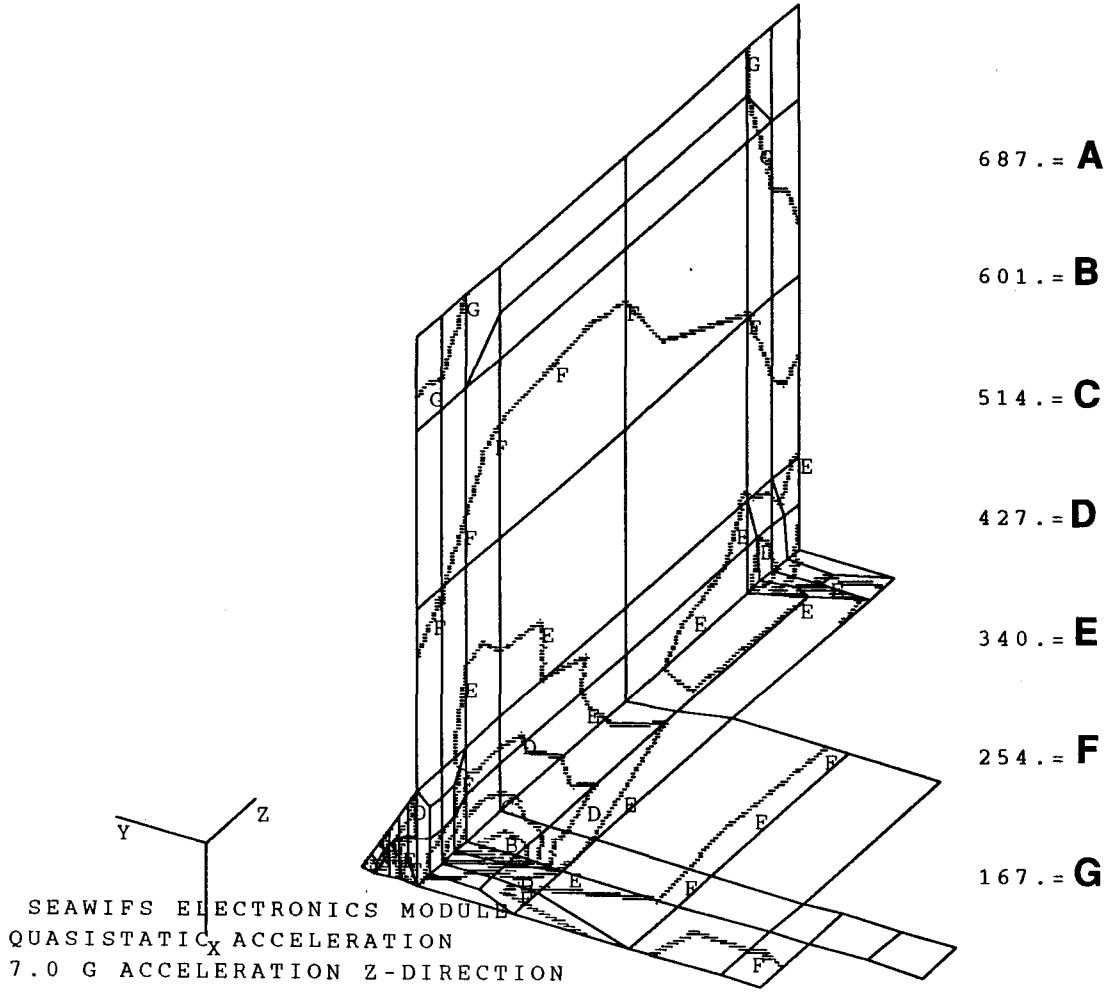

HUGHES

SANTA BARBARA RESEARCH CENTER
a subsidiary

MAXIMUM HOUSING STRESS OCCURS NEAR MOUNTING FOOT

SeaWiFS™

11/91
91-0838-658

EM CIRCUIT CARDS HAVE AMPLE MARGIN

HUGHES

SANTA BARBARA RESEARCH CENTER
a subsidiary

LAMINATED CIRCUIT BOARDS:

EXCITATION	MAXIMUM STRESS LOCATION	PEAK VON MISES STRESS (psi)	FAILURE CRITERIA AND LIMIT (psi)	MARGIN OF SAFETY
QUASI-STATIC X ACCELERATION Z	P/S A1	121 68	$\sigma_T = 30000$ $\sigma_T = 30000$	247 440
RANDOM X VIBRATION Y (QUAL LEVEL) Z	P/S P/S P/S	117 RMS 393 RMS 663 RMS	$\sigma_e > 8000$ $\sigma_e > 8000$ $\sigma_e > 8000$	>67 >19 >12
PYROSHOCK	P/S	4,224	$\sigma_T = 30000$	6.1
RANDOM + QUASI-STATIC ACCEL	P/S	710	$\sigma_e > 8000$	>10

COMPONENT LEAD STRAINS

HUGHES

SANTA BARBARA RESEARCH CENTER
a subsidiary

- COMPONENT LEAD STRAIN IS A FUNCTION OF CIRCUIT CARD DEFLECTION.
- CYCLIC LOADING IS MOST DAMAGING.

LOADING TYPE	WORST CASE EXCITATION	MAXIMUM CARD DEFLECTION (inches)	ALLOWABLE CARD DEFLECTION (inches)	MARGIN OF SAFETY
SINGLE EVENT	PYROSHOCK	0.027	TBS	TBS
CYCLIC	QUAL-LEVEL RANDOM VIBRATION	0.012	TBS	TBS

MOUNTING BOLT LOADS ARE BELOW PRELOAD LEVELS

HUGHES

SANTA BARBARA RESEARCH CENTER
a subsidiary

EXCITATION	MAXIMUM NORMAL BOLT LOAD (lb)	APPROXIMATE PRELOAD (lb)	MINIMUM SAFETY MARGIN
QUASISTATIC ACCELERATION	127	3200	24.0
RANDOM VIBRATION	137 RMS	3200	22.0
PYROSHOCK	964	3200	2.3
COMBINED QUASISTATIC + RANDOM	264	3200	11.0

EM STRUCTURAL SUMMARY

HUGHES
SANTA BARBARA RESEARCH CENTER
a subsidiary

- DESIGN IS ADEQUATE FOR ANTICIPATED LAUNCH ENVIRONMENT
- REVISED PYROSHOCK LEVELS HAVE IMPROVED MARGINS
- EM STRUCTURAL WORK REMAINING
  - CONTINUING DESIGN SUPPORT
  - MODEL FINE TUNING
  - TEST SUPPORT AND MODEL VALIDATION

ELECTRONICS MODULE THERMAL DESIGN/ANALYSIS

PAUL BORTFELDT

11/91
91-0838-670

THERMAL REQUIREMENTS ARE READILY ACHIEVABLE

HUGHES

SANTA BARBARA RESEARCH CENTER
a subsidiary

REQUIREMENT		ALLOWABLE	DESIGN
ELEC. MODULE TO S/C INTERFACE CONDUCTANCE W/°C	MOUNTS (TOTAL)	<0.8	0.12
	GROUND STRAP	<0.5	0.03
	S/C CABLING	<0.3	0.05
INTERFACE TEMPERATURE °C	OPERATING	0 TO 45	4 TO 28
	NON OPERATING	-30 TO +50	-26 TO +10

- RADIATION COUPLING TO PAYLOAD SHELF TBD

11/91
91-0838-671A

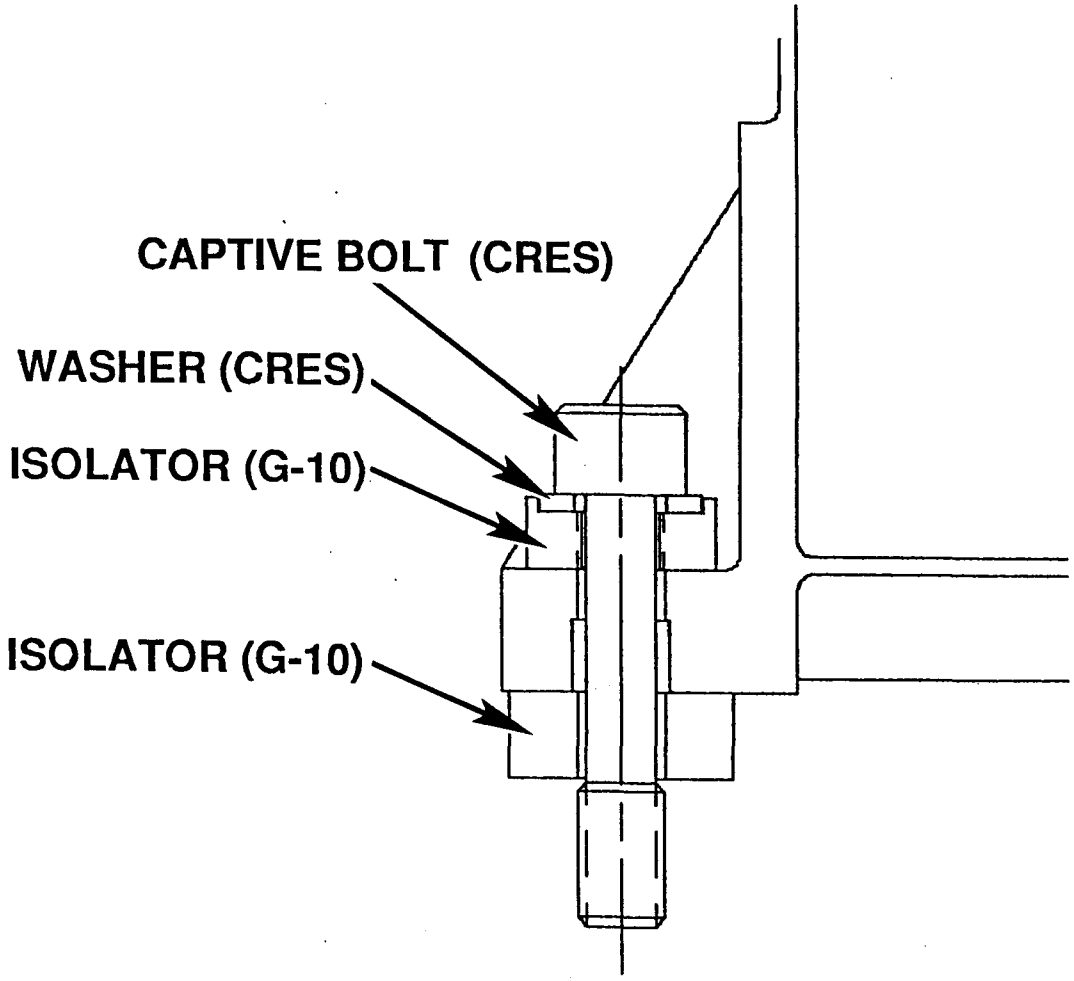

- INTERFACE CONDUCTANCE = .03W/°C PER MOUNT FOOT

HUGHES

SANTA BARBARA RESEARCH CENTER
a subsidiary

THERMAL ISOLATOR DESIGN DERIVED FROM ETM AND TES

SeaWiFS™

11/91
91-0838-672A

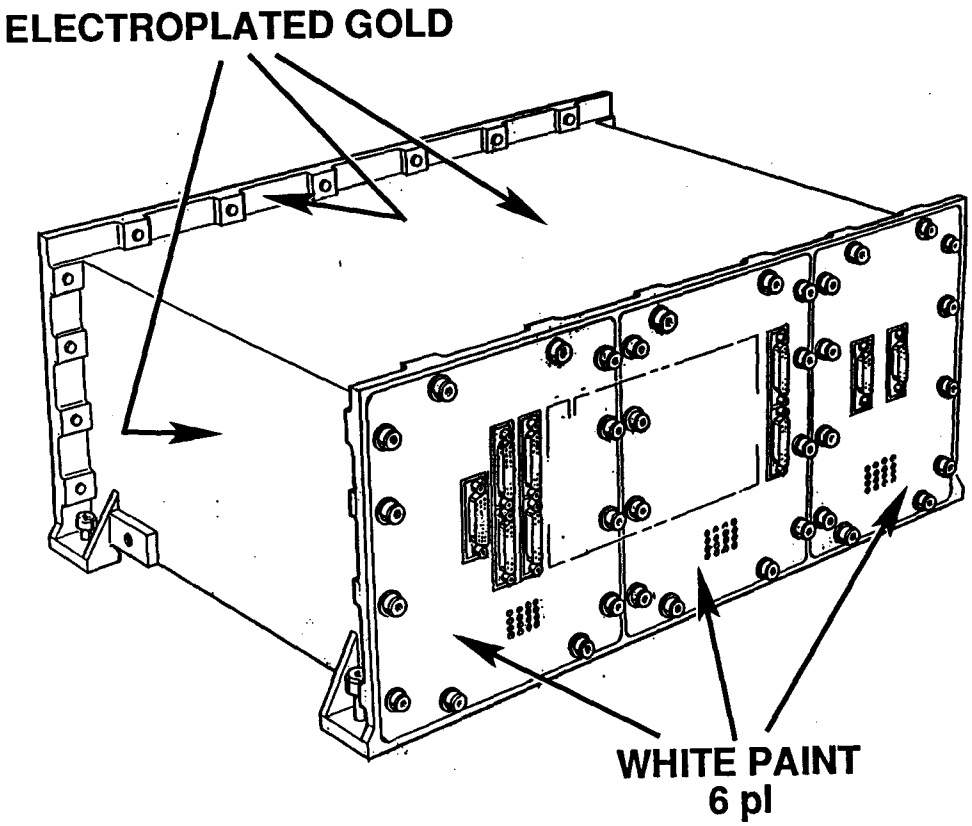

MATERIAL	BEGINNING OF LIFE		END OF LIFE	
	α_s	ε	α_s	ε
WHITE PAINT	.15	.88	.30	.88
GOLD	.20	.05	.20 - .35	.05

HUGHES

SANTA BARBARA RESEARCH CENTER
a subsidiary

ELECTRONICS MODULE THERMAL CONTROL SURFACES

11/91
91-0838-673A

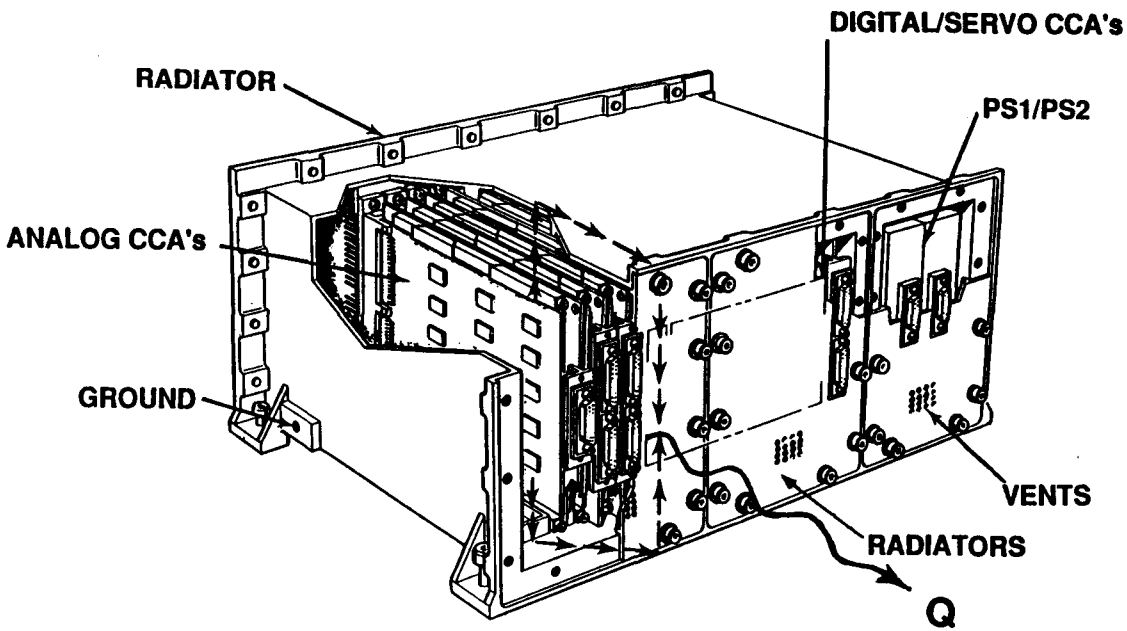

- TYPICAL CARD GUIDE CONDUCTANCE = 2.6 W°C PER CARD EDGE
- AVERAGE THERMAL GRADIENT BETWEEN CARD EDGE AND RADIATOR PANELS ≈ 11°C

HUGHES

SANTA BARBARA RESEARCH CENTER
a subsidiary

ELECTRONICS MODULE HEAT PATH

SeaWiFS

12/91
91-0838-674A

POWER ESTIMATES USED IN THERMAL ANALYSIS

HUGHES

SANTA BARBARA RESEARCH CENTER
a subsidiary

QTY	REF DES	DESCRIPTION	DATA COLLECTION NOMINAL POWER (W)	ECLIPSE NOMINAL POWER	ORBIT AVERAGE POWER (W)
1	A1	TEST	1	1	1
4	A2 - A5	POSTAMP	24	0	9.6
	A6	SPARE	0	0	0
	A7	SPARE	0	0	0
1	A8	TIMING & DATA	2	0	0.8
2	A9 - A10	SERVO MECH. DRIVES	10	10	10
1	A11	ANGULAR MOMENTUM AND TILT DRIVES	5	5	5
2	A12 - A13	COMMAND/TELE METRY	1	1	1
2	PS1 - PS2	POWER SUPPLY	25	11	16.6
		TOTAL	68	28	44

11/91
91-0838-675A

COMPUTER MODELS USED TO VERIFY THERMAL CONTROL PLAN

HUGHES

SANTA BARBARA RESEARCH CENTER
a subsidiary

TWO THERMAL CODES USED:

- NEVADA RADIATION ANALYZER (CALCULATES GREY-BODY INTERCHANGE FACTORS AND ENVIRONMENTAL LOADS)
  - ELECTRONICS MODULE - 25 SURFACES

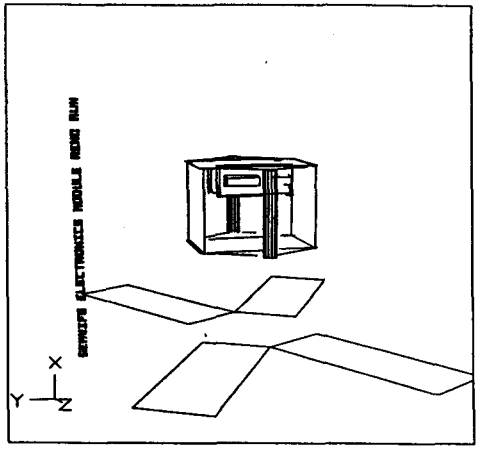

- CINDA FINITE DIFFERENCE CODE
  - ELECTRONICS MODULE
    - 483 NODES
    - 1100 CONDUCTORS

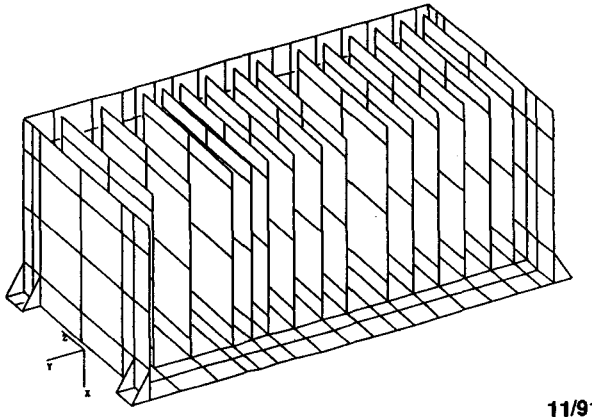

11/91
91-0838-677A

ELECTRONICS MODULE HAS SURPLUS RADIATING AREA

HUGHES

SANTA BARBARA RESEARCH CENTER
a subsidiary

RADIATOR	AREA (in^2) AVAILABLE	AREA (in^2) USED	AVERAGE * TEMPERATURE (EOL) °C
+Z	190	150	25
-Z	250	150	24
TOTAL	440	300 (68%)	

* NORMAL OPERATION, END OF LIFE CONDITIONS

- RADIATOR MARGIN = 47%

11/91
91-0838-678A

ELECTRONICS MODULE ENVIRONMENTAL LOADS ARE LOW

HUGHES

SANTA BARBARA RESEARCH CENTER
a subsidiary

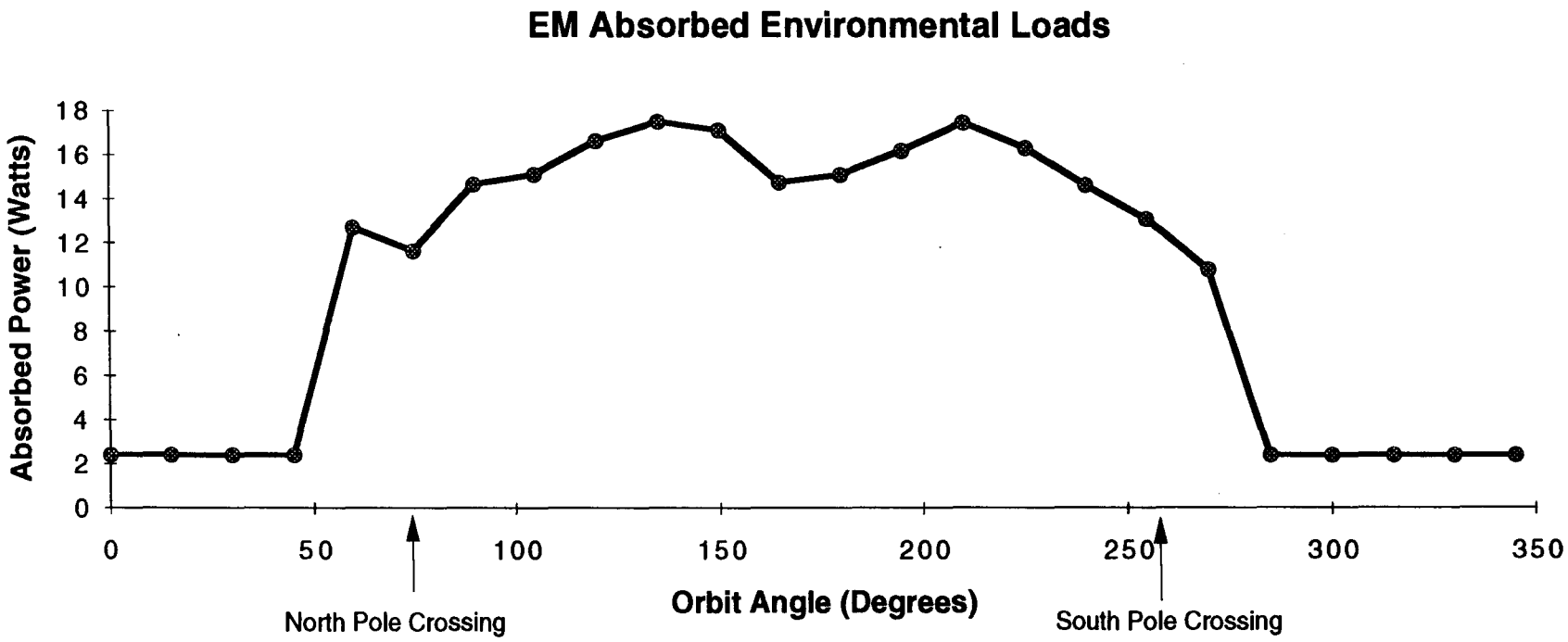

- ORBIT AVERAGE VALUE = 10.2W

11/91
91-0838-679A

EM THERMAL PERFORMANCE IS WITHIN ACCEPTABLE LIMITS OVER 5 YEAR MISSION LIFE

HUGHES

SANTA BARBARA RESEARCH CENTER
a subsidiary

EM REGION	WORST CASE HOT* PAYLOAD SHELF = 30°C, EOL CONDITIONS TEMPERATURE MIN/MAX °C	WORST CASE COLD* PAYLOAD SHELF = -10°C, BOL CONDITIONS TEMPERATURE MIN/MAX °C	(S)PECIFIED OR (A)LLOWABLE RANGE °C	
CIRCUIT CARD (A4)	28/36	10/18	–20/60	A
P/S CARDS	38/47	20/28	–20/50	A
RADIATOR PLATES	22/26	4/8		
MOUNT FLANGES	23/30	4/10	0/45	S

*PAYLOAD SHELF TEMPERATURE IS ASSUMED CONSTANT OVER AN ORBIT

11/91
91-0838-680A

EM HOT/COLD OPERATING EXTREMES

HUGHES

SANTA BARBARA RESEARCH CENTER
a subsidiary

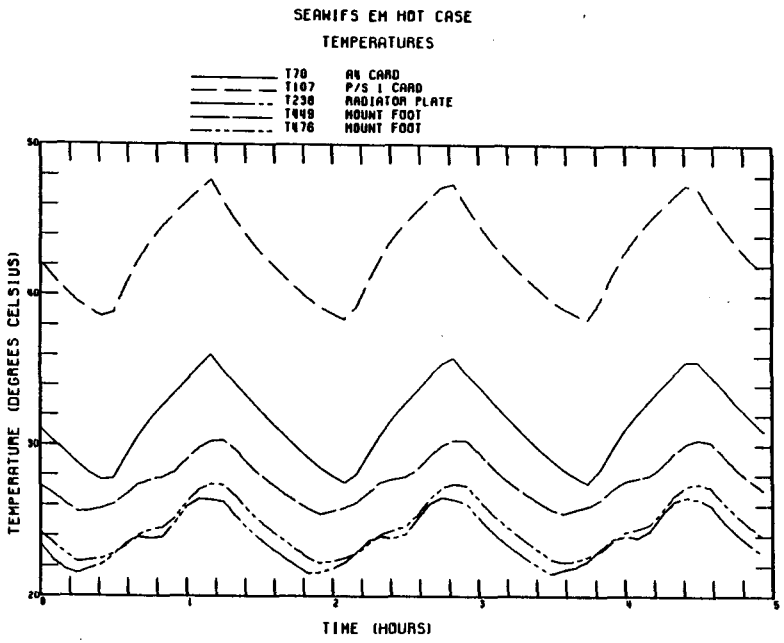

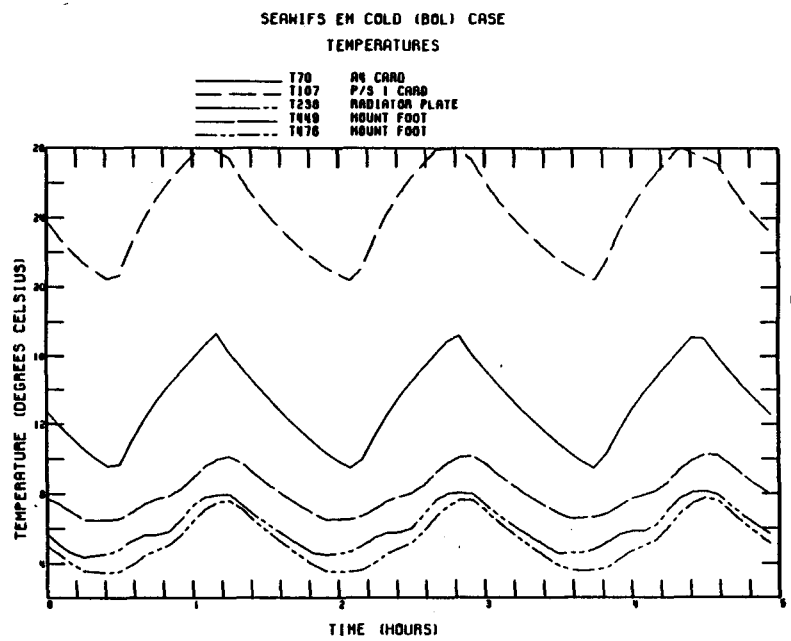

EM MOUNT TEMPERATURE = 25°C
PAYLOAD SHELF TEMP (ASSUMED) = 30°C

EM MOUNT TEMPERATURE = 6°C
PAYLOAD SHELF TEMP (ASSUMED) = -10°C

11/91
91-0838-681A

SAFE STATE POWER REQUIREMENTS CAN BE MET

HUGHES

SANTA BARBARA RESEARCH CENTER
a subsidiary

- HEATER POWER
  - ALLOWABLE = 30W TOTAL
  - DESIGN
    - SCANNER = 18W
    - ELECTRONICS MODULE = 12W
- INTERFACE TEMPERATURES
  - ALLOWABLE = -30°C
  - DESIGN (ELECTRONICS MODULE) = -26°C

HEATER ACTIVATION BEGINS 90 MINUTES AFTER ENTERING SAFE STATE

HUGHES

SANTA BARBARA RESEARCH CENTER
a subsidiary

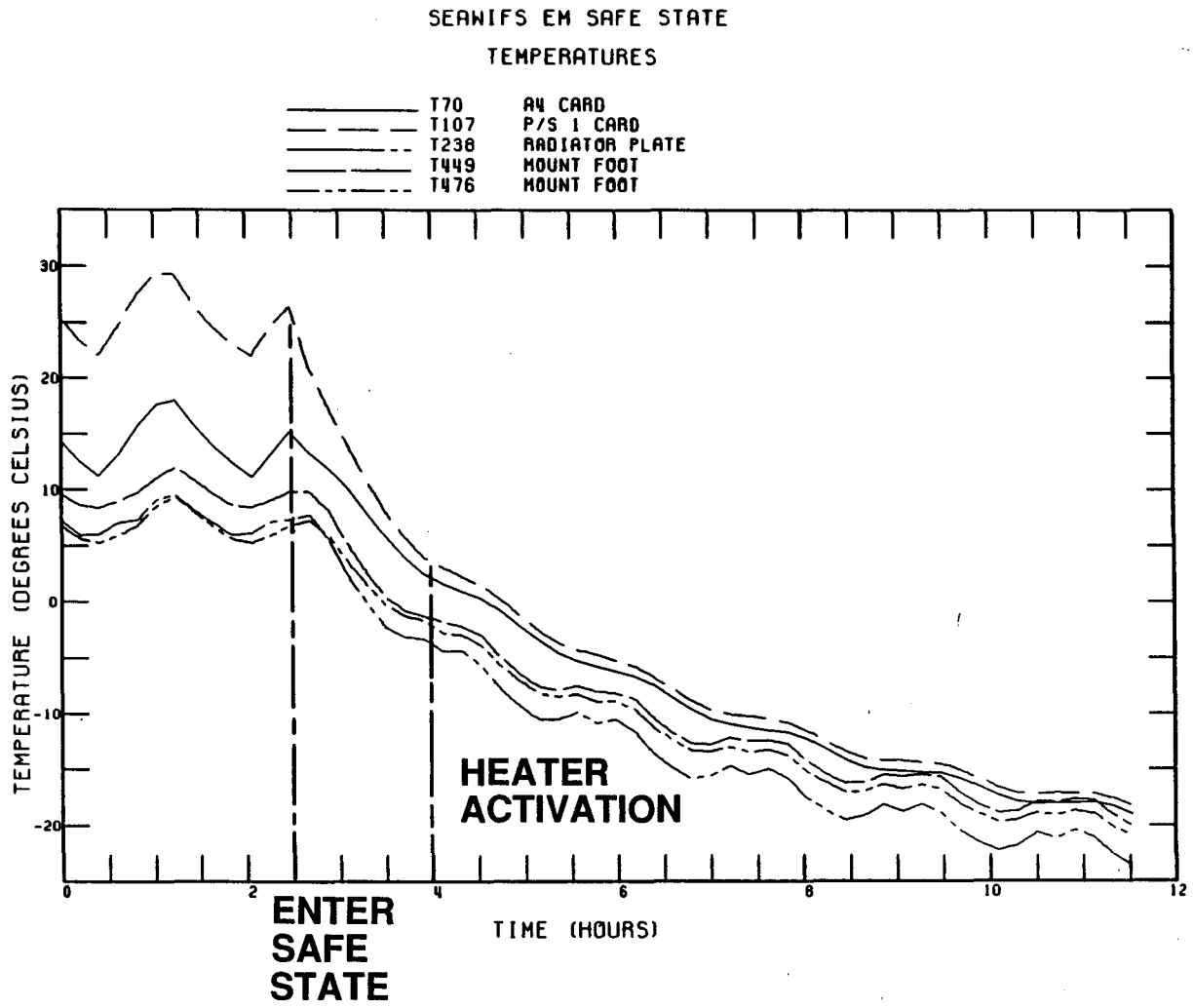

11/91
91-0838-683A

ELECTRONICS MODULE THERMAL SUMMARY

HUGHES

SANTA BARBARA RESEARCH CENTER
a subsidiary

- ELECTRONICS RADIATING AREA IS SUFFICIENT FOR CURRENT ESTIMATED POWER — 47% MARGIN AVAILABLE
- INTERNAL AND INTERFACE TEMPERATURES MEET SPECIFICATIONS DURING NORMAL OPERATION AND SAFE STATE
- WIDE TEMPERATURE DIFFERENTIAL BETWEEN HOT AND COLD CASES DUE IN LARGE PART TO PAYLOAD SHELF EXTREMES. SUGGEST SEPARATE PAYLOAD SHELF OPERATING/SAFESTATE RANGES
  - NON OPERATING P/S RANGE -15°C TO 45°C
  - OPERATING PAYLOAD SHELF RANGE (-5°C TO 20°C)
- REQUIRE S/C THERMAL CONTROL PLAN FROM OSC
- FINAL THERMAL INTERFACE DATA DUE 1/16/92

RELIABILITY ENGINEERING

GEORGE GRITT

11/91
91-0838-801

MAJOR RELIABILITY ENGINEERING FUNCTIONS

HUGHES

SANTA BARBARA RESEARCH CENTER
a subsidiary

- DESIGN ANALYSES
- PARTS, MATERIALS, AND PROCESSES; SELECTION AND CONTROL
- FAILURE REPORTING
- PROGRAM RELIABILITY

DESIGN ANALYSES TASKS PROGRESSING

HUGHES

SANTA BARBARA RESEARCH CENTER
a subsidiary

- STRESS ANALYSIS
- WORST CASE ANALYSIS
- FAILURE MODES, EFFECTS,AND CRITICALITY ANALYSIS (FMECA)
- RADIATION ANALYSIS

STRESS ANALYSIS COMPLETED ON DETECTOR/TIA, INTERCONNECT, PREAMP AND POSTAMP ASSEMBLIES

HUGHES

SANTA BARBARA RESEARCH CENTER
a subsidiary

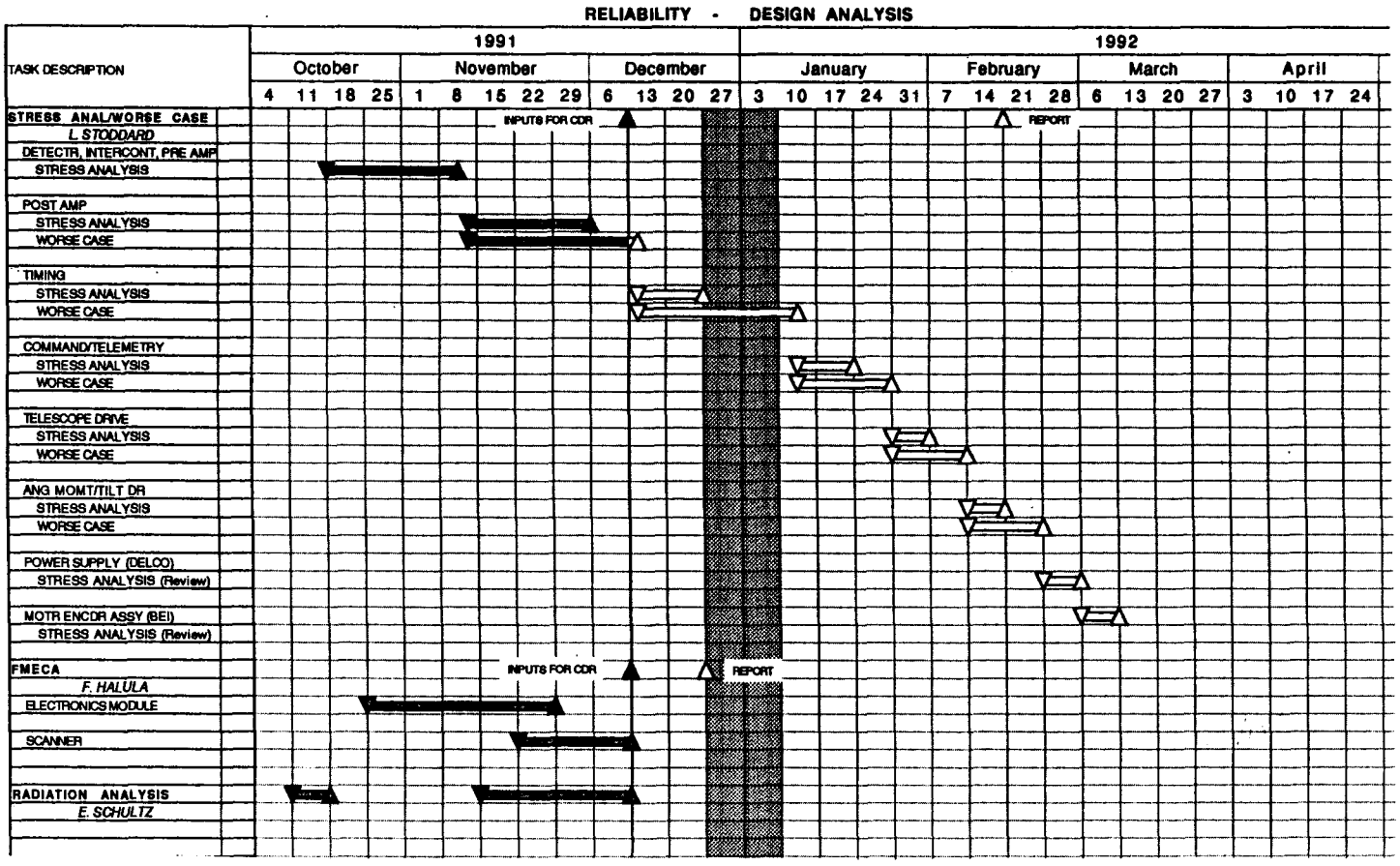

11/91
91-0838-805

WORST-CASE ANALYSIS ADDRESSES END OF LIFE DRIFT AND EXTREME VALUE CONDITIONS

HUGHES

SANTA BARBARA RESEARCH CENTER
a subsidiary

- SELECTED CIRCUITS ARE BEING ANALYZED ASSUMING WORST CASE TOLERANCE CONDITIONS AT THE COMPONENT LEVEL
- ANALYSIS ADDRESSES EXTREME VALUE, END OF LIFE DRIFT, INCLUDING RADIATION AND THERMAL EFFECTS
- ANALYSIS IS EXPECTED TO BE COMPLETED BY THE END OF FEB '92

FAILURE MODES EFFECTS AND CRITICALITY ANALYSIS (FMECA) STATUS

HUGHES

SANTA BARBARA RESEARCH CENTER
a subsidiary

RESULTS OF FMECA FOR ELECTRONIC MODULE

- INTEGRATED CIRCUITS AND ASSOCIATED COMPONENTS IN DIGITAL SECTION OF POST AMP BOARDS OPEN OR SHORT, WOULD RESULT IN POSSIBLE LOSS OF BAND

  ACTION TAKEN: PROCURING "S" LEVEL, OR SCREENED TO "SE" LEVEL EQUIVALENT, PARTS FOR THESE APPLICATIONS

- CERAMIC CAPACITOR SHORT IN SERVO DRIVE, WOULD CAUSE TELESCOPE OR HALF-ANGLE MIRROR INSTABILITY

  ACTION TAKEN: PART USAGE BEING REVIEWED FOR REPLACEMENT OF CAPACITOR TYPE

- TANTULUM CAPACITOR ACROSS THE POWER SUPPLY INPUT TO POST AMP SHORT, WOULD RESULT IN LOSS OF BAND

  ACTION TAKEN: CIRCUIT REDESIGNED TO PUT TWO CAPACITORS IN SERIES

FAILURE MODES EFFECTS AND CRITICALITY ANALYSIS FOR SCANNER

HUGHES

SANTA BARBARA RESEARCH CENTER
a subsidiary

- BEARING FAILURE IN MOTOR ENCODER FOR TELESCOPE OR HALF-ANGLE MIRROR WOULD CAUSE A COMPETE LOSS OF DATA

  ACTION: MOTOR ENCODER BEARINGS WILL BE LIFE TESTED, AND ACCELERATED LIFE TESTS WILL BE PERFORMED ON FLIGHT LOT BEARING SETS

- HALF-ANGLE MIRROR BREAKING AWAY FROM MOUNT WOULD CAUSE A COMPLETE LOSS OF DATA

  ACTION: DESIGN IS CONSERVATIVE, WITH SUFFICIENT AND PROPER BONDING TECHNIQUES. MIRROR AND HOLDER WILL BE SUBJECTED TO QUALIFICATION LEVEL VIBRATION

- LINKAGE BETWEEN TILT MOTORS BREAKS OR BECOMES DISCONNECTED, WOULD CAUSE A LOSS OF VIDEO DATA

  ACTION: CONSERVATIVE DESIGN, WITH PROPER LOCKING MECHANISMS WILL BE INCORPORATED. DEVICE WILL BE SUBJECTED TO QUALIFICATION LEVEL VIBRATION

EACH BAND HAS CONSIDERABLE REDUNDANCY EXCEPT FOR LAST FEW STEPS OF TDI SUMMING

HUGHES

SANTA BARBARA RESEARCH CENTER
a subsidiary

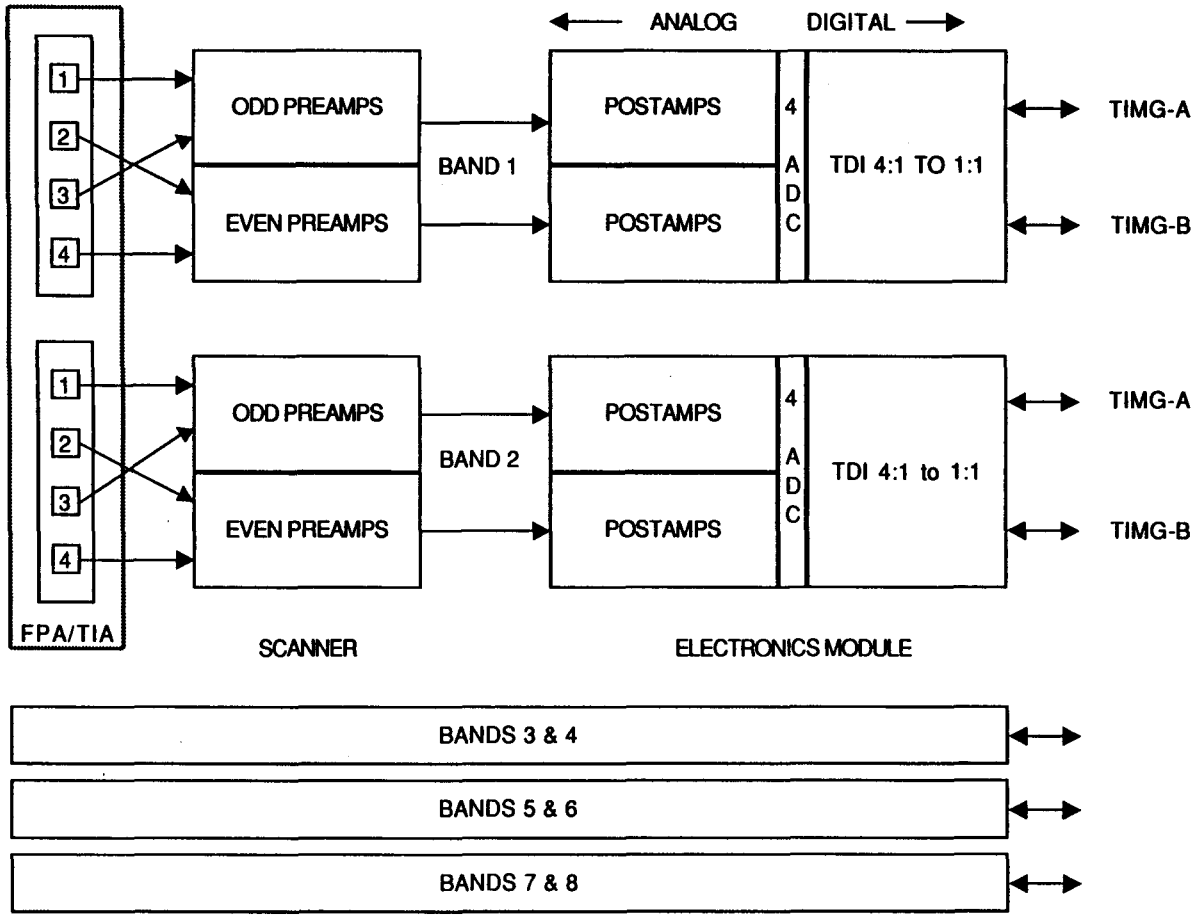

11/91
91-0838-807B

VIDEO ELECTRONICS REDUNDANCY

MAJOR ELECTRONICS BLOCKS ARE CROSS-STRAPPED

HUGHES

SANTA BARBARA RESEARCH CENTER
a subsidiary

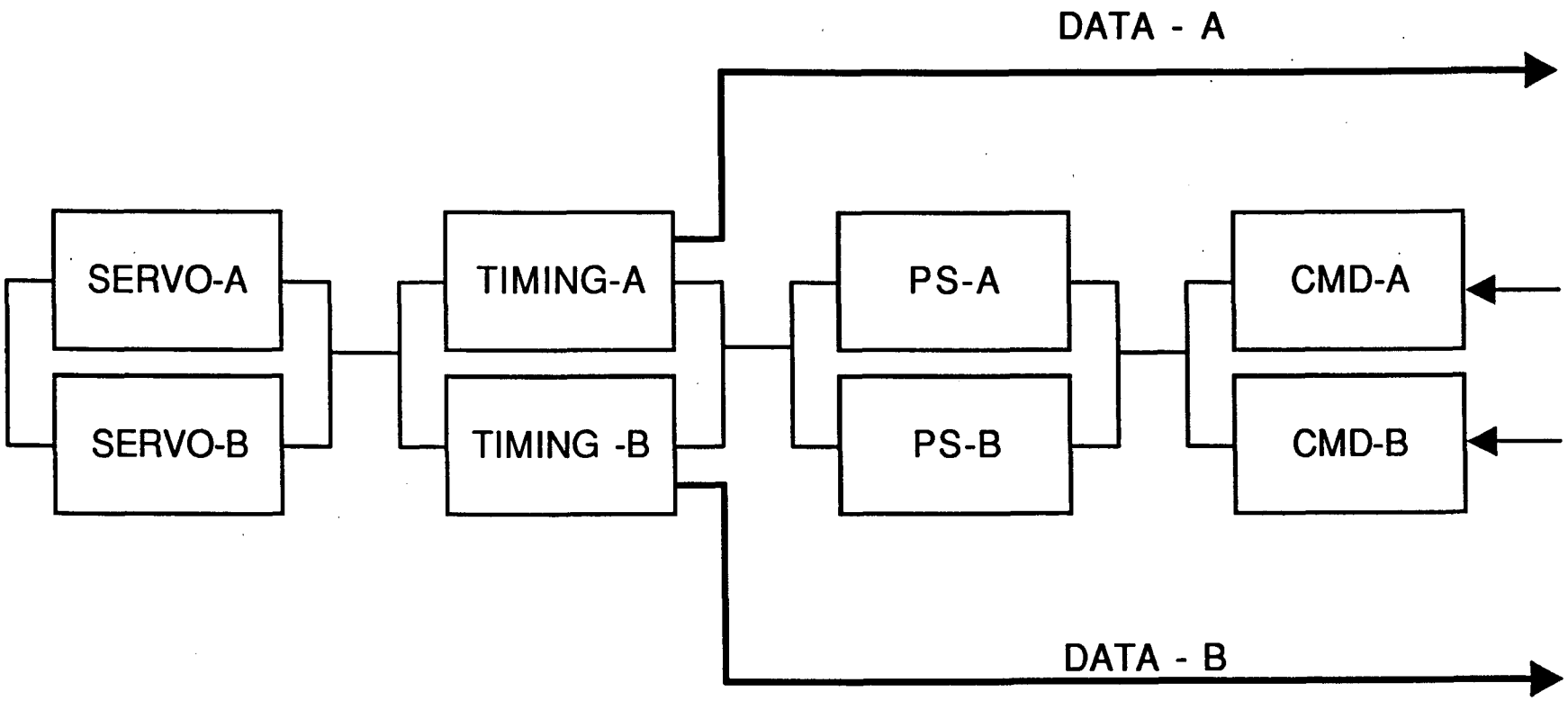

11/91
91-0838-807C

SERVO HAS COMPLETE REDUNDANCY; TILT AND MOMENTUM COMPENSATOR HAVE PARTIAL REDUNDANCY

HUGHES

SANTA BARBARA RESEARCH CENTER
a subsidiary

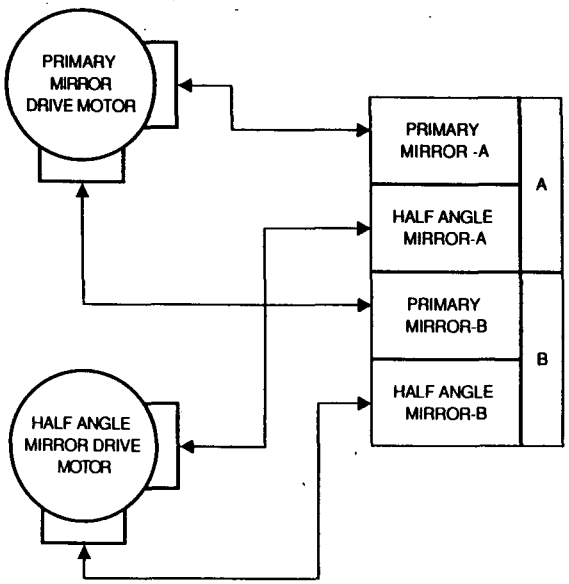

TELESCOPE SERVO REDUNDANCY

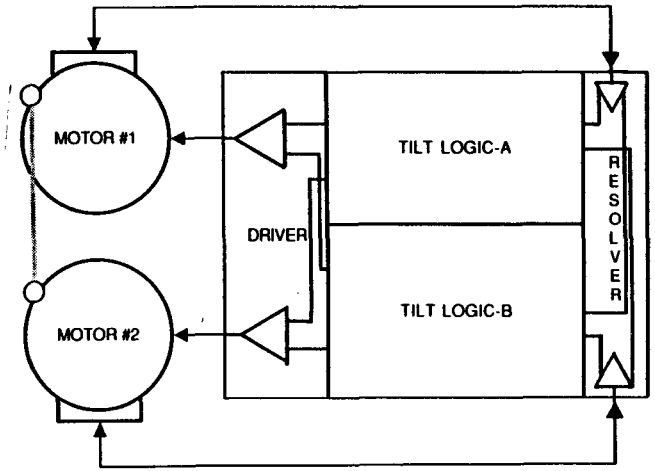

TILT DRIVE REDUNDANCY

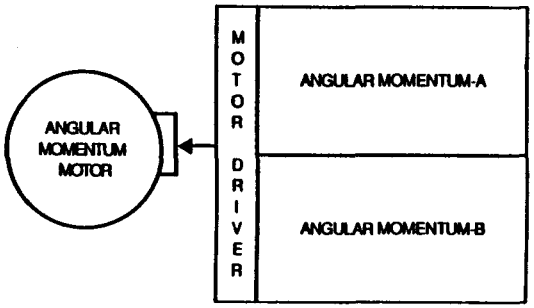

ANGULAR MOMENTUM REDUNDANCY

11/91
91-0838-807D

DETERMINATION OF RADIATION LEVELS WITHIN THE ELECTRONIC MODULE

HUGHES

SANTA BARBARA RESEARCH CENTER
a subsidiary

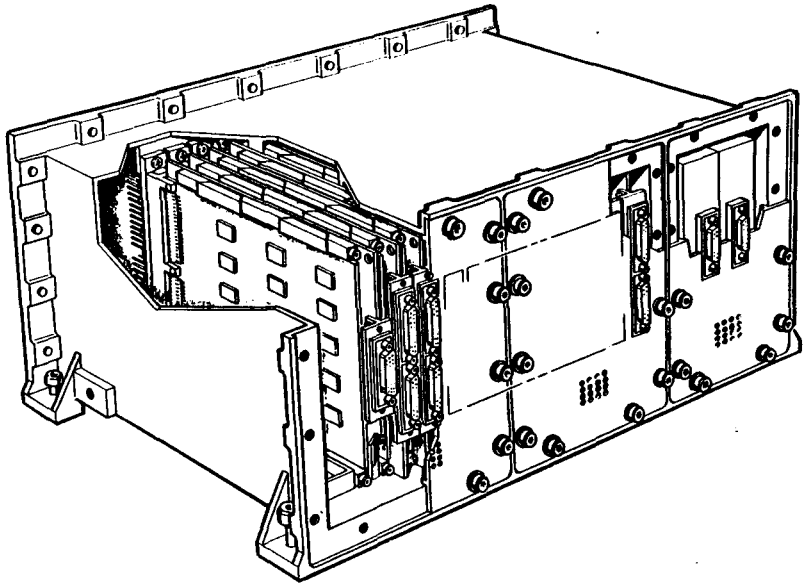

5 YR DOSE LEVEL WITH 2X MARGIN*

- A2 (LEFT SIDE) WORST CASE 43.18K RAD
- A9 (MIDDLE) WORST CASE 41.8K RAD
- P.S.-2 (RIGHT SIDE) WORST CASE 43.8K RAD

* SPECIFICATION CURRENTLY UNDER REVIEW

11/91
91-0838-808

EXPECTED RADIATION LEVELS IN ASSEMBLIES

(CONTINUED)

HUGHES

SANTA BARBARA RESEARCH CENTER
a subsidiary

PREAMP ASSEMBLY

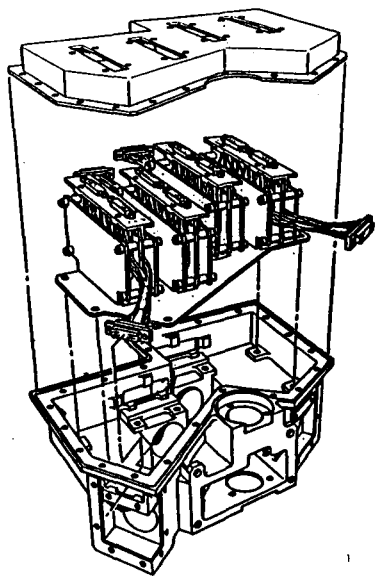

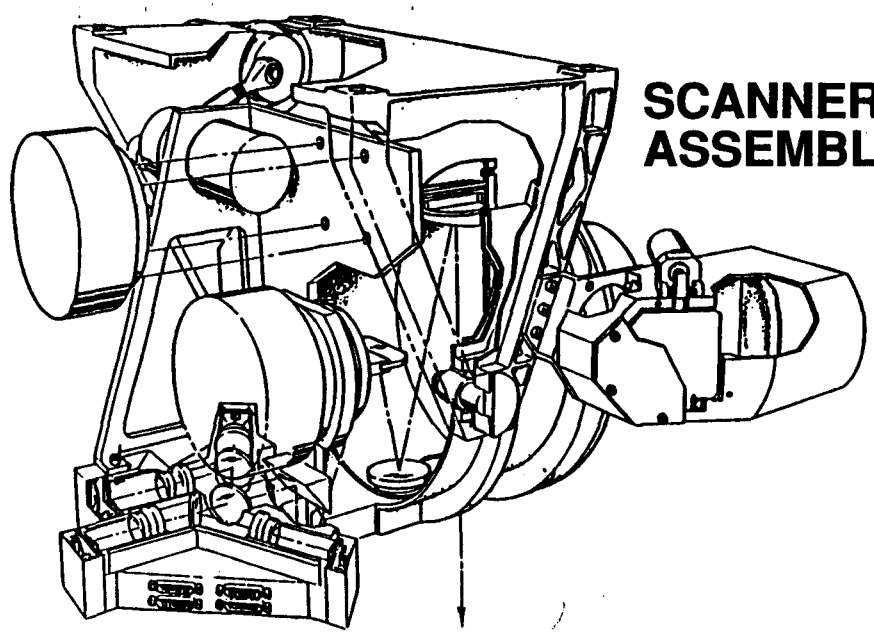

SCANNER ASSEMBLY

5 YR DOSE LEVEL WITH 2X MARGIN*

• PRE AMP ASSY BOARD	WORST CASE	44.7K RAD
• TELESCOPE ASSY SCRAMBLER	WORST CASE	12.3K RAD

*SPECIFICATION UNDER REVIEW

11/91
91-0838-809

PARTS, MATERIALS, AND PROCESSES CONTROLS HAVE BEEN ESTABLISHED

HUGHES

SANTA BARBARA RESEARCH CENTER
a subsidiary

- AUTHORIZED MATERIALS AND PROCESSES LISTS HAVE BEEN COMPLETED
- AUTHORIZED PARTS LIST IS NEARING COMPLETION
- AUTHORIZED LISTS ARE BEING MAINTAINED BY RELIABILITY ENGINEERING IN CONCERT WITH PMPCB (PARTS MATERIALS AND PROCESSES CONTROL BOARD) DECISIONS
- GIDEP (GOVERNMENT INDUSTRY DATA EXCHANGE PROGRAM) ALERT SYSTEM IS IN FULL OPERATION

HI REL PART SELECTION RECOMMENDATIONS BY COMPONENT ENGINEERING

HUGHES

SANTA BARBARA RESEARCH CENTER
a subsidiary

- RECOMMENDATIONS FOR HI REL PART SELECTIONS HAVE BEEN PROVIDED FOR THE FOLLOWING FLIGHT CIRCUIT BOARDS AND ASSEMBLIES

  A. PREAMPLIFIER BOARD

  B. POSTAMPLIFIER BOARD

  C. COMMAND AND TELEMETRY BOARD

  D. SERVO MECH DRIVES CIRCUIT BOARD

  E. FOCAL PLANE INTERCONNECT ASSEMBLY

  F. TIMING/DATA BOARD

  G. FOCAL PLANE ASSEMBLY (FPA)

CRITICAL ITEMS LIST

HUGHES

SANTA BARBARA RESEARCH CENTER
a subsidiary

- **PROCURED ITEMS THAT REQUIRE SPECIAL HANDLING, TOLERANCE, PROCESS, OR SPECIAL DESIGN CONTROLS (REQUIRING SOURCE INSPECTION) DUE TO COMPLEXITY, RELIABILITY, CRITICALITY, STATE-OF-THE-ART, OR SUPPLIER PERFORMANCE HISTORY**

	ITEM NAME AND DESCRIPTION	ITEM PART NUMBER/ SPEC	USE	MFR	CRITI-CALITY CODE	REMARKS
1	MOTOR/ENCODER ASSEMBLY-FINCHER	401787 151688 404125	TELESCOPE AND HALF ANGLE MIRROR DRIVE AND CONTROL D	BEI	SPF	SOURCE AT BEI FOR SOLDERING/WORKMANSHIP. ACCEPTANCE TEST ALL BUT QUAL UNIT. QUAL TEST ONE UNIT. LIFE TEST TBD
2	DETECTOR ARRAYS-ROGERS	414025 151689	ARRAYS FOR BANDS 1 THROUGH 8	UDT, SDC	C,APPL	RESPONSIVITY, NOISE, CROSSTALK, DIMENSIONAL TOLERANCE SOURCE INSPECTION QUALIFICATION TEST TBD
3	POWER SUPPLY-ROGERS	414310 151702	PROVIDE POWER TO INSTRUMENT	DELCO	C,APPL	
4	TILT MOTOR/BEARINGS-FINCHER	414139 151701	TELESCOPE TILT	TBD	C,APPL	SOURCE AT VENDOR, QUALIFICATION TBD
5	ANGULAR MOMENTUM MOTOR/BEARINGS-FINCHER	414150 151703	COMPENSATE FOR TEL & HALF ANGLE MIRROR ROTATION	TBD	C,APPL	SOURCE AT VENDOR, QUALIFICATION TBD
6	MIRROR, PRIMARY-MOORE N	414115	TELESCOPE	AM, E	C,APPL	
7	MIRROR, HALF-ANGLE-MOORE	414117	IMAGE MOTION COMPENSATION	TBD	C,APPL	
8	SPECTRAL FILTERS-MOORE	VARIOUS	SPECTRAL DELINEATION	OCLI	C,APPL	EDGE SLOPE, SPECTRA SHIFT (VAC VS AMB) SPURIOUS RESPONSE
9	BEAMSPLITTER/DICHROIC-MOORE	404137	SPECTRAL BEAM-SPLITTING	OCLI	C,APPL	SPECTRAL SHIFT (VAC VS AMB), SPURIOUS RESPONSE
10	POLARIZATION SCRAMBLER-MOORE	404116	REDUCE POLARIZ. SENSITIVITY	CONT.	C,APPL	RADIATION TESTING, QUALIFICATION TBD
11	SOLAR CALIBRATOR DOOR ACTUATOR - FINCHER	TBD	OPEN PROTECTIVE COVER	TBD	C,APPL	TBD
12	CALIBRATOR DIFFUSER-HOLMES	TBD	MEASURE CALIBRATION DRIFT	IITRI	C,APPL	QUALIFICATION OF WITNESS SAMPLES
13	PRINTED WIRING BOARDS-ROGERS	VARIOUS	ELECTRONICS MODULE & PRE AMP ASSY	SPECT. SOVGN	C,APPL	DELSEN REVIEW OF COUPONS

RIGOROUS EVENT/FAILURE REPORTING SYSTEM WILL MINIMIZE HIDDEN DEFECTS

HUGHES

SANTA BARBARA RESEARCH CENTER
a subsidiary

- EVENT FAILURE REPORTING (EFR) SYSTEM HAS BEEN ESTABLISHED USING THE SAME GROUND RULES AS USED ON PREVIOUS SPACE PROGRAMS, i.e., TM, ETM
- E.F.R. SYSTEM IS DESCRIBED IN THE PERFORMANCE ASSURANCE PLAN
- FAILURE REVIEW BOARD HAS BEEN ESTABLISHED AND INCLUDES: PROGRAM MANAGEMENT, RESPONSIBLE ENGINEER, QUALITY ENGINEER, AND RELIABILITY ENGINEER. SYSTEMS AND MANUFACTURING ENGINEERS ARE INCLUDED ON AN "AS REQUIRED" BASIS
- SYSTEM PROVIDES READY ACCESS TO INFORMATION FOR TREND ANALYSIS AND SUMMARY REPORTING

OTHER RELEVANT ENGINEERING ACTIVITIES TO SUPPORT SeaWiFS SCHEDULE

HUGHES

SANTA BARBARA RESEARCH CENTER
a subsidiary

- PROCEDURE GOVERNING FAILURE REPORTING FOR SeaWiFS HAS BEEN RELEASED
- LIFE TEST RECOMMENDATIONS ARE BEING PROVIDED TO DESIGN ENGINEERS
- RELIABILITY INTERFACE HAS BEEN ESTABLISHED WITH MOTOR/ENCODER, AND POWER SUPPLY SUBCONTRACTORS

BENCH TEST AND CALIBRATION EQUIPMENT

TEST COMPUTER

JIM KANE

HUGHES

SANTA BARBARA RESEARCH CENTER
a subsidiary

11/91
91-0838-900

SeaWiFS INSTRUMENT IS CONTROLLED BY AN HP COMPUTER THROUGH VXI CARDS

HUGHES

SANTA BARBARA RESEARCH CENTER
a subsidiary

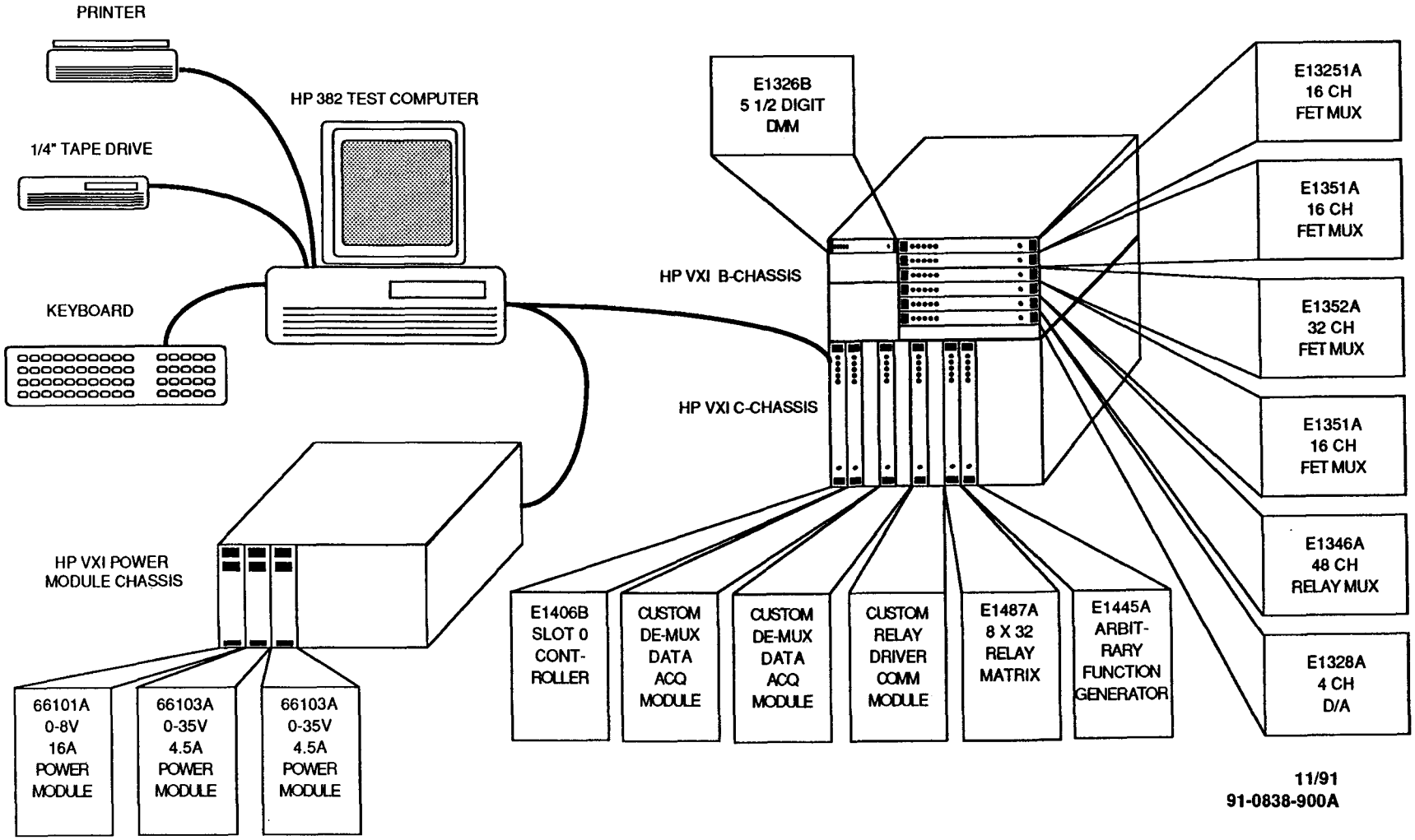

11/91
91-0838-900A

SeaWiFS BTCE: BLOCK DIAGRAM

HUGHES
SANTA BARBARA RESEARCH CENTER
a subsidiary

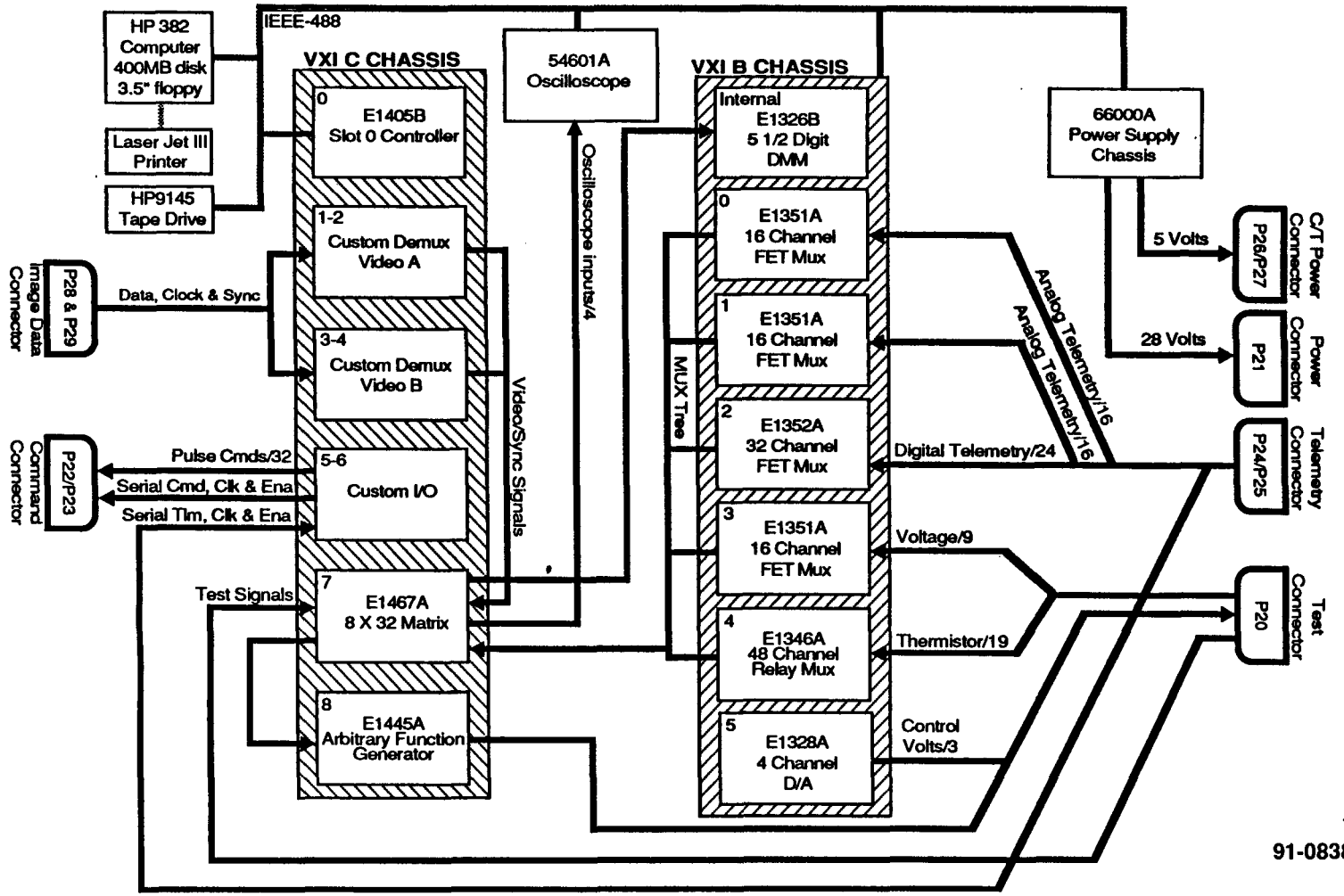

11/91
91-0838-901

AUTOMATED TESTS CAN BE RUN FOLLOWING A PREDETERMINED SCRIPT

HUGHES

SANTA BARBARA RESEARCH CENTER
a subsidiary

PULL DOWN MENU'S

- SYSTEM CALIBRATION
- TURN-ON & FUNCTIONAL
- BASELINE
- THERMAL VACUUM
- INDIVIDUAL TESTS

AUTOMATION

- TESTS AUTOMATED WHERE POSSIBLE
- PROMPTS ARE INCLUDED WHERE NECESSARY

DATA STORAGE TECHNIQUE WILL SUPPORT MULTIPLE FORMATS AND MACHINES

HUGHES

SANTA BARBARA RESEARCH CENTER
a subsidiary

DATA STORAGE

- HEADER INCLUDING TELEMETRY FOLLOWED BY SCENE DATA (ONE SCENE PER FILE)
- RAW DATA FROM EACH TEST

MEDIA

- HARD DISC (PRIMARY STORAGE)
- ARCHIVE TO 3 1/2" HIGH DENSITY FLOPPY DISCS
- ARCHIVE TO 1/4" TAPE

FORMAT

- HP (ASCII OR BINARY)
- IBM (ASCII)
- MACINTOSH (VIA FILE EXCHANGE FROM IBM FORMAT)

IMAGE DATA DISPLAY GRAPHICALLY PRESENTS VIDEO SCAN DATA

HUGHES

SANTA BARBARA RESEARCH CENTER
a subsidiary

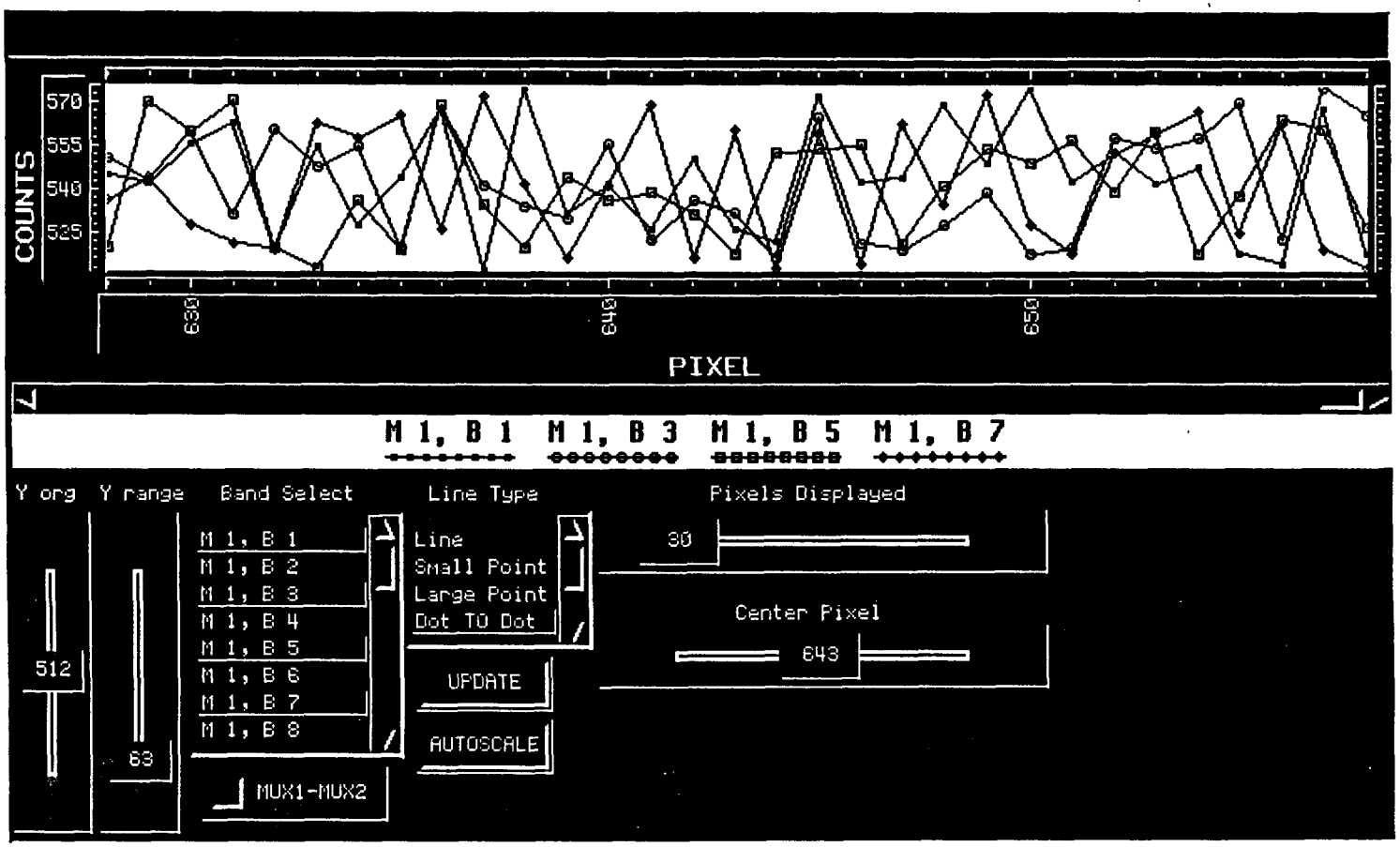

11/91
91-0838-902

SERIAL COMMAND WINDOW SIMPLIFIES INSTRUMENT SERIAL COMMAND CONSTRUCTION

HUGHES

SANTA BARBARA RESEARCH CENTER
a subsidiary

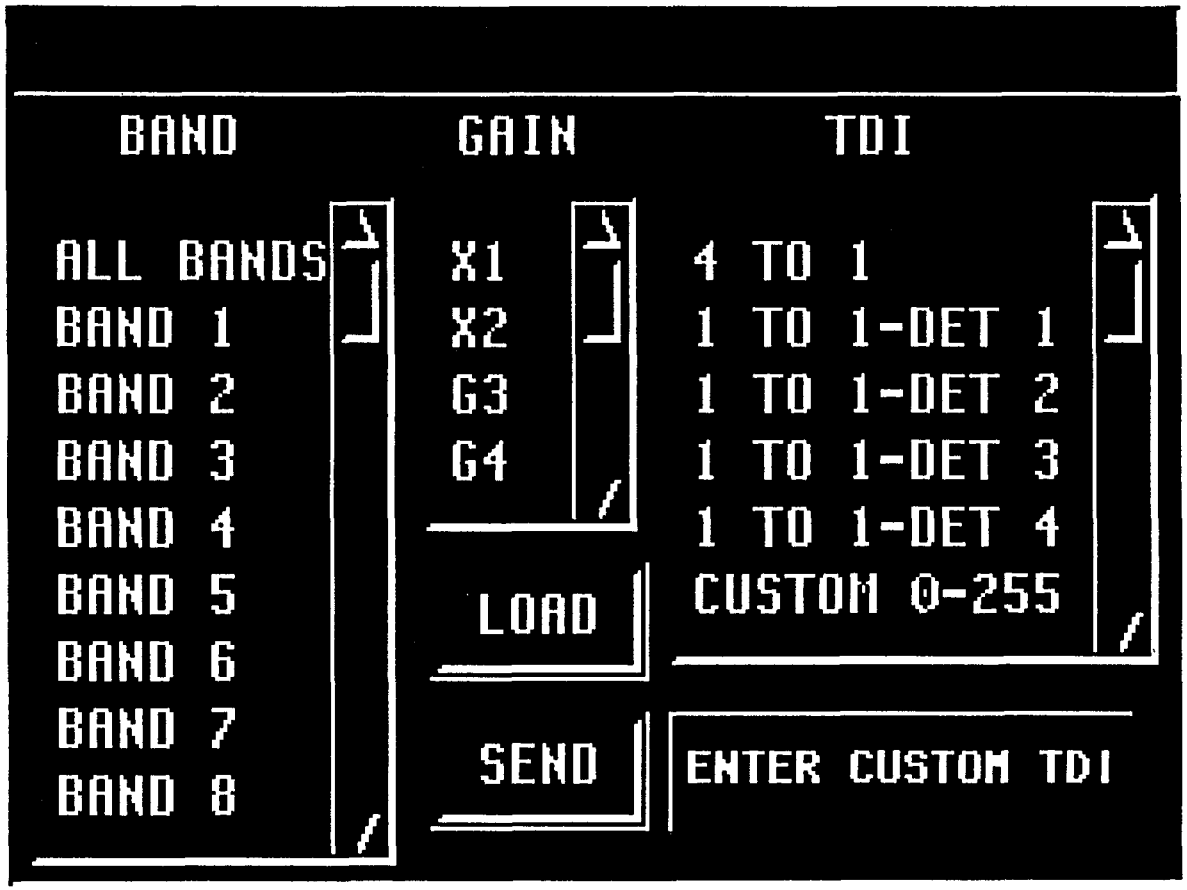

11/91
91-0838-903

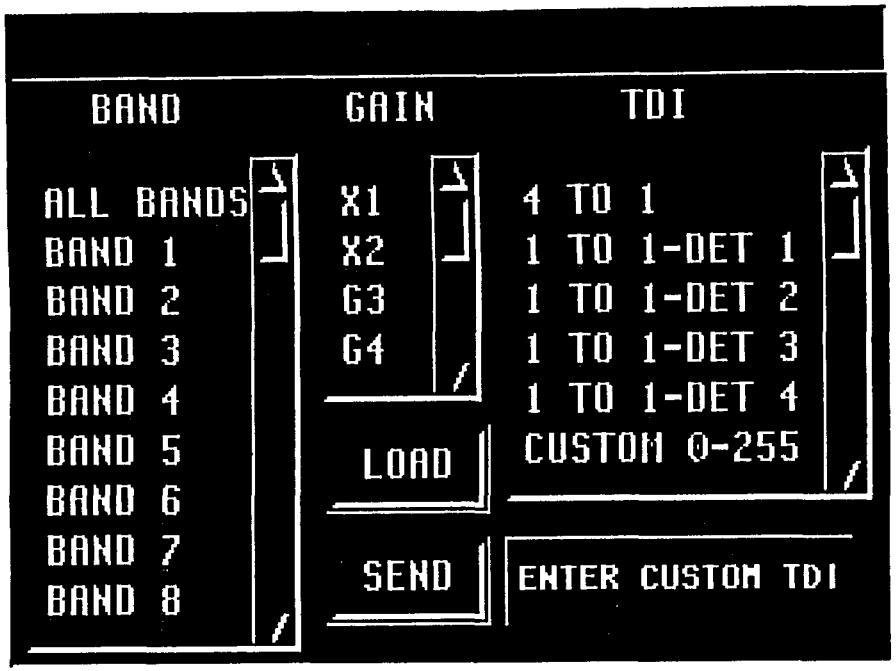

BAND	GAIN	TDI
1	DIFFUSER	TDI - 6
2	LUNAR	TDI - 1
3	DIFFUSER	TDI - 6
4	DIFFUSER	TDI - 6
5	X1	TDI - 36
6	DIFFUSER	TDI - 6
7	X2	TDI - 12
8	DIFFUSER	TDI - 6

BAND	GAIN	TDI
1	DIFFUSER	TDI - 6
2	LUNAR	TDI - 1
3	DIFFUSER	TDI - 6
4	DIFFUSER	TDI - 6
5	X1	TDI - 36
6	DIFFUSER	TDI - 6
7	X2	TDI - 12
8	DIFFUSER	TDI - 6

HUGHES

SANTA BARBARA RESEARCH CENTER
a subsidiary

SERIAL COMMAND/ TELEMETRY WINDOW ALLOWS GAIN AND TDI SETTINGS TO BE SELECTED AND CONFIRMED

SeaWiFS™

11/91
91-0838-904

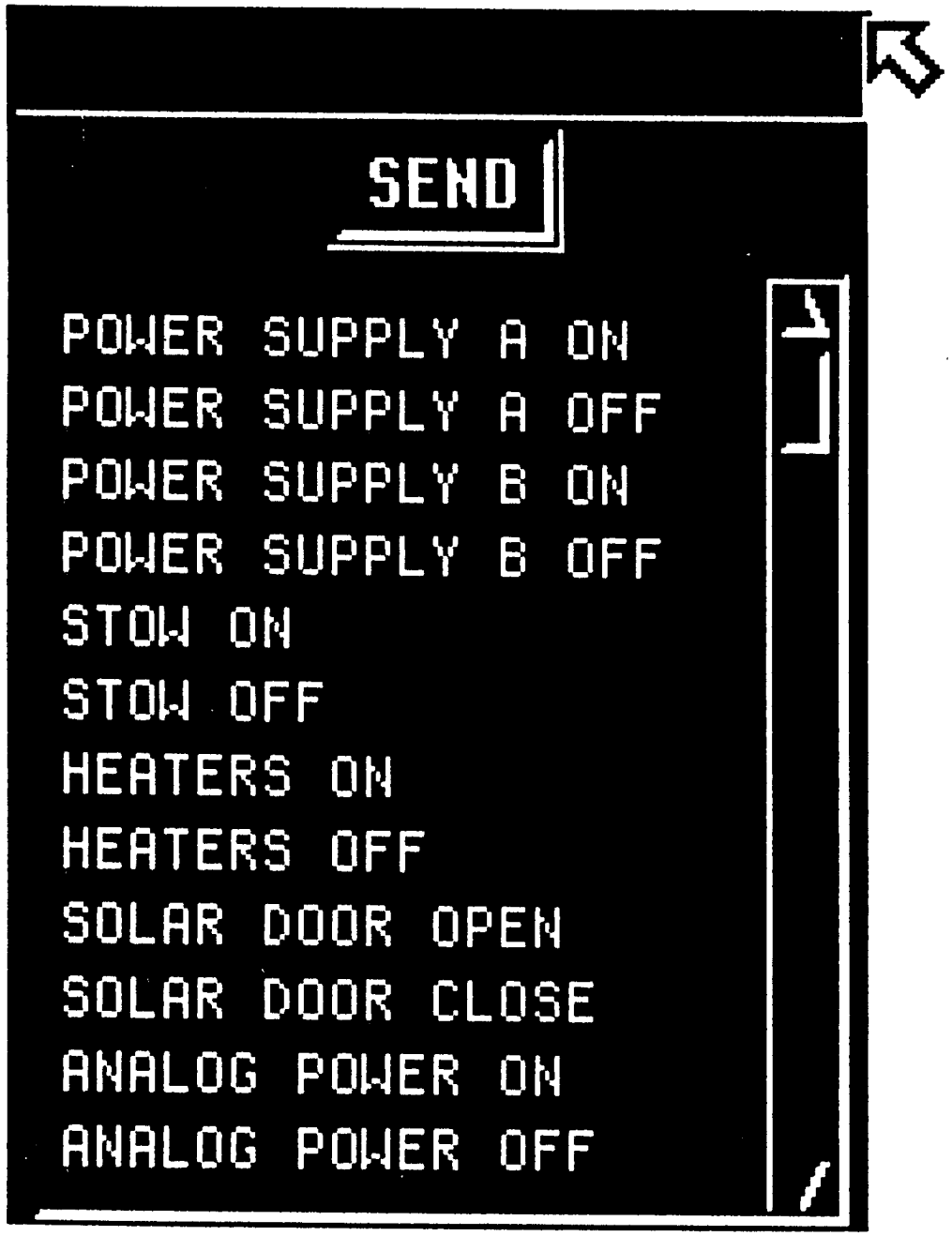

HUGHES

SANTA BARBARA RESEARCH CENTER
a subsidiary

PULSE COMMAND WINDOW IS USED TO SET INSTRUMENT CONFIGURATION

SeaWiFS™

11/91
91-0838-905

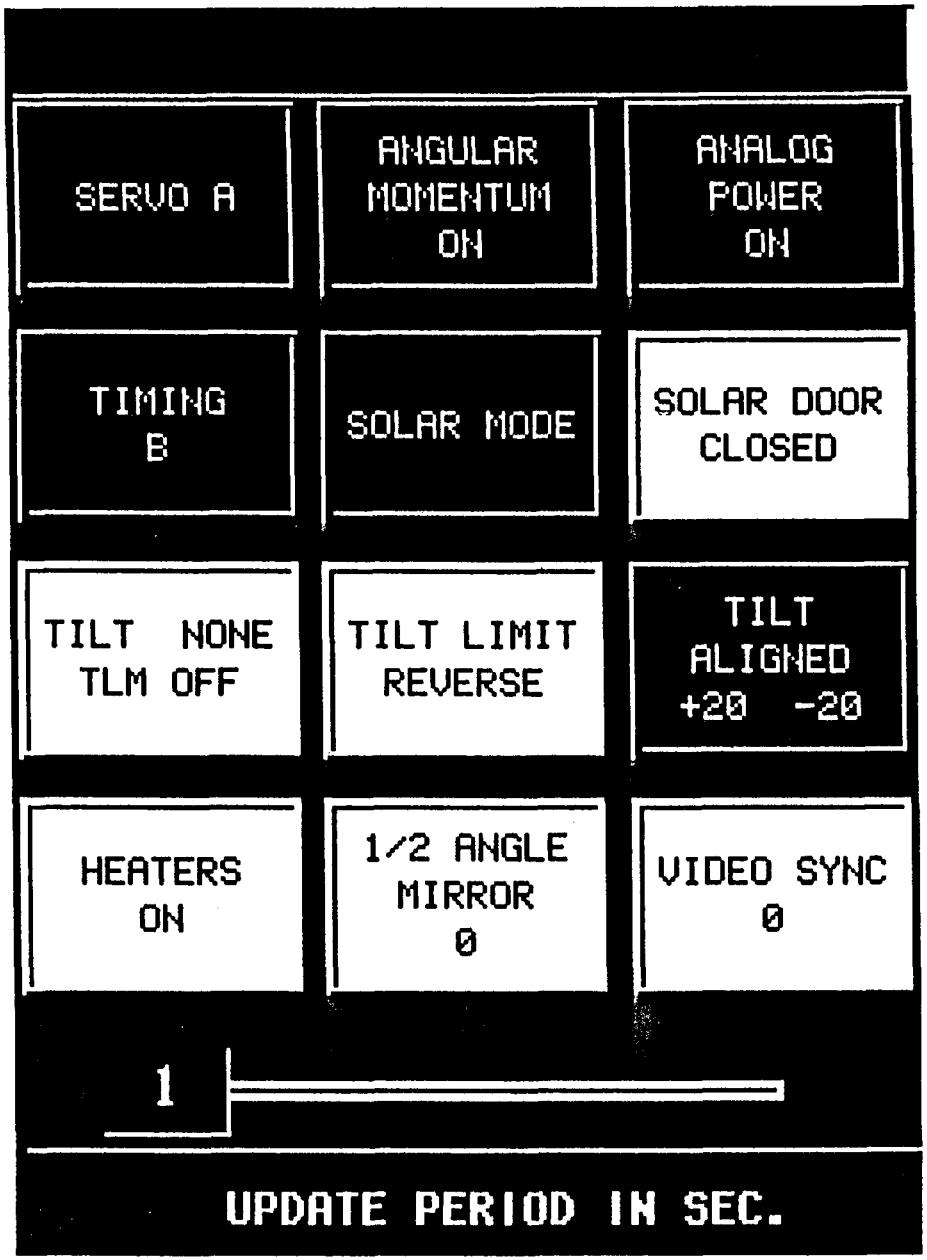

HUGHES

SANTA BARBARA RESEARCH CENTER
a subsidiary

DIGITAL TELEMETRY INFORMATION IS PRESENTED WITH A COLORED INDICATOR LIGHT SCREEN DISPLAY

SeaWiFS™

11/91
91-0838-907A

TEMPERATURES

FPA BAND		
1/2	-02.8	ºC
3/4	+17.5	ºC
5/6	-22.0	ºC
7/8	-12.7	ºC

ELECT MOD		
A1	-04.0	ºC
A2	-14.7	ºC
P.S.	+10.2	ºC

SCANNER		ºC
MOTOR	+16.2	ºC
TILT	-07.4	ºC
1/2 ANGLE	-11.4	ºC

CURRENT

P. S.	A	0.288	mA
P. S.	B	1.581	mA
TELE SERVO	A	1.622	mA
TELE SERVO	B	1.802	mA
1/2 ANGLE	A	1.298	mA
1/2 ANGLE	B	0.062	mA
ANG MOM	A	1.277	mA
ANG MOM	B	0.492	mA

PHASE ERROR

SERVO	A	0.014	mr
SERVO	B	0.276	mr
ANGULAR MOM		0.607	mr

VOLTAGES

+28	+28.0	V
+15	+15.5	V
-15	-15.0	V
+12	+12.2	V
-12	-11.7	V
+ 5	+05.5	V
- 5	-04.6	V

TILT POSITION

-.248 º

UPDATE PERIOD IN SEC.

HUGHES

SANTA BARBARA RESEARCH CENTER
a subsidiary

ANALOG TELEMETRY INFORMATION IS SHOWN ON A SINGLE SCREEN

SeaWiFS™

11/91
91-0838-906

SeaWiFS SOFTWARE DOCUMENTATION SCHEDULE

HUGHES

SANTA BARBARA RESEARCH CENTER
a subsidiary

ATS ¶	Test Type	STATUS	Description	Due Date
3.2.2.1	Primary Power (Steady state)		AUTOMATED TEST Incls: MTR,HTR, STOW,	1/6/92
3.2.19	Electromechanical Measurements		AUTOMATED TEST MTR START UP TIME, TORQUE MARGIN ,STOW TIME , TILT TRANSITION TIME	1/6/92
3.2.23	Commandable Gain		AUTOMATED TEST	1/6/92
---	General Video Checks		Generic Test Routine (See [1], below for applications)	1/6/92
3.2.4	Command & Telemetry Verification		AUTOMATED TEST	1/13/92
3.2.22	Clock Frequency		AUTOMATED TEST	1/20/92
3.2.2.2	Primary Power (Turn-on transient)		AUTOMATED TEST	1/20/92
3.2.7	Scan Line Start-Postion Adjustment		ADJUSTMENT ROUTINE	1/20/92
3.2.8	Tilt Angle Position Adjustment		ADJUSTMENT ROUTINE	1/20/92
3.2.3	Test Connector Voltages		AUTOMATED TEST	1/20/92
3.2.17	IFOV Size		AUTOMATED TEST	1/27/92
3.2.18	Modulation Transfer Function		AUTOMATED TEST	1/27/92
3.2.5	Spectral Band Responsivity & Offset Adjustment		AUTOMATED TEST	2/3/92
3.2.24	Radiometric Calibration		AUTOMATED TEST	2/3/92
3.2.25	Check of Radiometric Calibration (2-point cal)		AUTOMATED TEST Combined with SNR test (See [2])	2/3/92
3.2.14	Scan Modulation		AUTOMATED TEST	2/10/92
3.2.15	Cross Track Scan Profile		AUTOAMTED TEST	2/10/92
3.2.11	Bright Target Recovery		AUTOMATED TEST	2/17/92
3.2.10	Coherent Noise		AUTOMATED TEST (DARK SCENE)	2/17/92

11/91
91-0838-908

BTCE EQUIPMENT WILL BE AVAILABLE TO OPERATE THE ENGINEERING DEVELOPMENT UNIT

HUGHES

SANTA BARBARA RESEARCH CENTER
a subsidiary

SeaWiFs BTCE

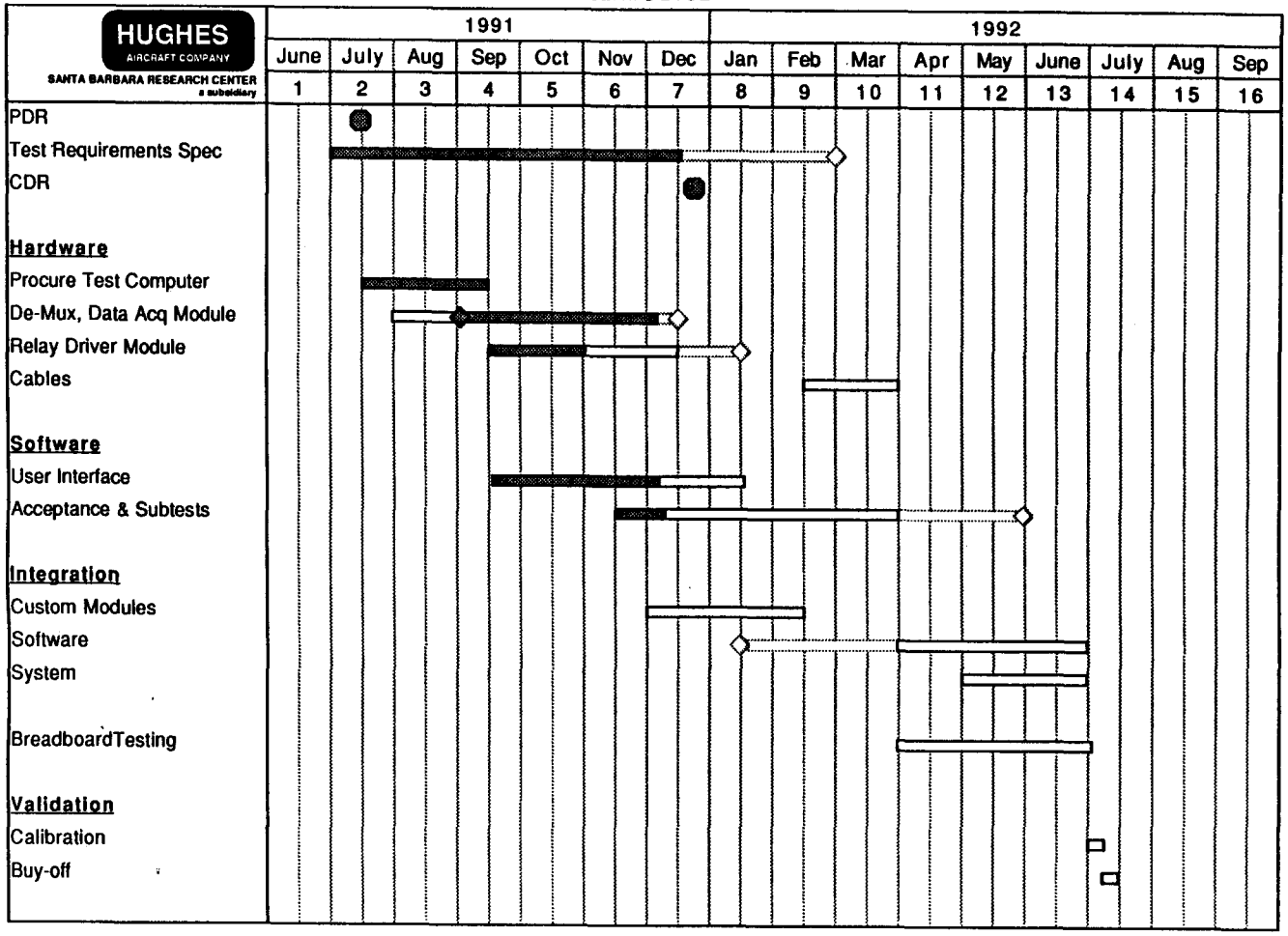

11/91
91-0838-907

SYSTEM INTEGRATION & TEST

RICK SHADFORTH

11/91
91-0838-1000

INSTRUMENT INTEGRATION AND CALIBRATION SEQUENCE

HUGHES
SANTA BARBARA RESEARCH CENTER
a subsidiary

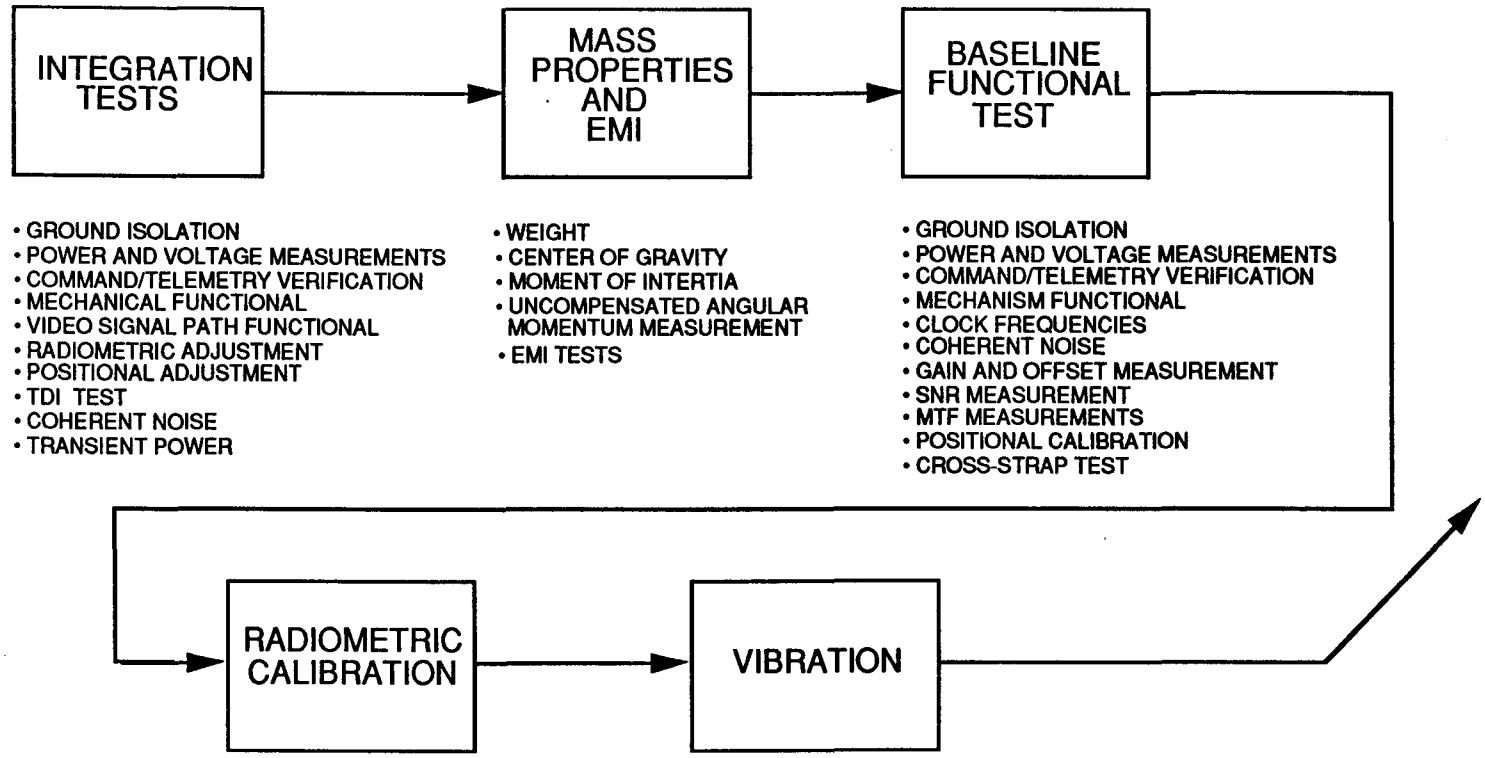

11/91
91-0838-1001

INSTRUMENT INTEGRATION AND CALIBRATION SEQUENCE (CONT.)

HUGHES
SANTA BARBARA RESEARCH CENTER
a subsidiary

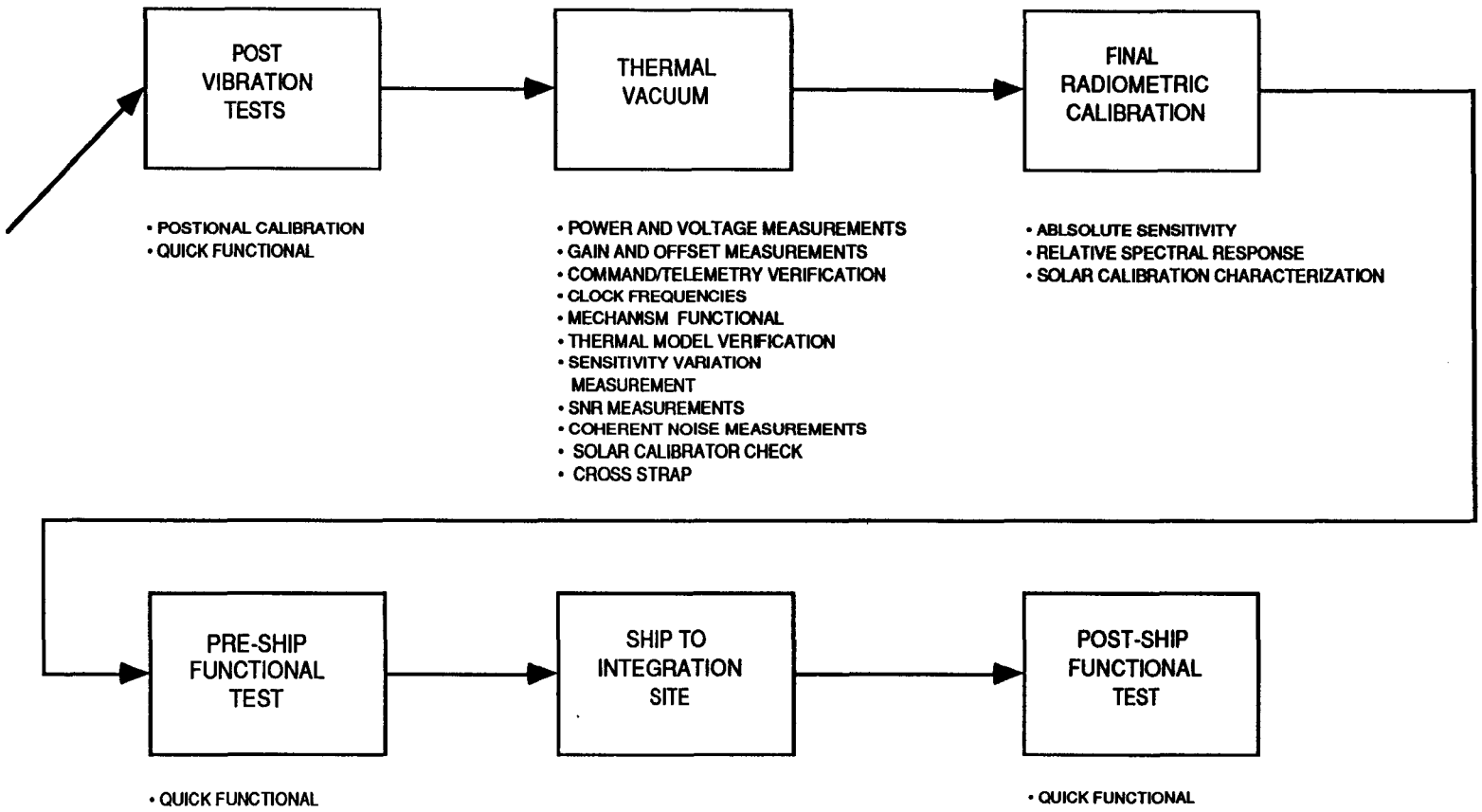

11/91
91-0838-1002

PLANNED SeaWiFS TEST MATRIX

HUGHES

SANTA BARBARA RESEARCH CENTER
a subsidiary

ATS ¶	Test Type	Test Phase * Int	MP	BL	Cal	PV	TV	QF	Notes
3.2.1	Ground Isolation	X		X					
	POWER, VOLTAGE, AND TIMING MEASUREMENTS								
3.2.2.1	Primary Power (Steady state)			X		X	X	X	3.2.2.3, 3.2.2.4, and 3.2.2.5 are included
3.2.2.2	Primary Power (Turn-on transient)	X							
3.2.2.3	Motor Power	X							
3.2.2.4	Heater Power	X							
3.2.2.5	Stow Power	X							
3.2.3	Test Connector Voltages	X		X		X		X	
3.2.22	Clock Frequency	X		X		X	X	X	
	COMMAND AND TELEMETRY								
NA	Command and Telemetry Execute/Nonexecute Test	X							
3.2.4	Command & Telemetry Verification			X	X		X	X	
NA	TDI Verification	X							
NA	Cross Strap Checks	X		X			X		
	POSITIONAL MEASUREMENTS								
3.2.6	Spectral Band Coregistration Verification (BBR)			X		X			
3.2.7	Scan Line Start-Postion Adjustment	X							
3.2.8	Tilt Angle Position Adjustment	X							
NA	Scan Line and Tilt Position Confirmation					X			
3.2.14	Scan Modulation				X				
3.2.15	Cross Track Scan Profile			X		X			IFOV type of measurement
3.2.16	Reference Alignment Surfaces	X				X			
3.2.17	IFOV Size			X		X			
3.2.18	Modulation Transfer Function			X		X			
	MECHANISM FUNCTIONAL								
3.2.19.1	Motor Start-up Time	X		X		X	X	X	
3.2.19.2	Motor Torque Margin	X		X		X	X	X	
3.2.19.3	Telescope Stow	X		X		X	X	X	
3.2.19.4	Tilt Transition Time	X		X		X	X	X	

PLANNED SeaWiFS TEST MATRIX

HUGHES

SANTA BARBARA RESEARCH CENTER
a subsidiary

ATS ¶	Test Type	Test Phase * Int	MP	BL	Cal	PV	TV	QF	Notes
	MASS PROPERTIES AND EMI								
3.2.13	Electromagnetic Compatibility		X						
3.2.19.5	Scanner Uncompensated Angular Momentum		X						
3.2.20.1	Weight		X						
3.2.20.2	Center of Gravity		X						
3.2.20.3	Moment of Inertia		X						
NA	Thermal Model Verification						X		
	RADIOMETRIC MEASUREMENT SERIES								
3.2.5	Spectral Band Responsivity & Offset Adjustment	X							
3.2.9	Polarization Sensitivity				X				
3.2.10	Coherent Noise	X		X			X		
3.2.11	Bright Target Recovery	X							
3.2.12	Spectral Bandpass Parameter Confirmation (RSR)				X				Pre and Post TV
3.2.23	Commandable Gain	X		X	X	X	X	X	
3.2.24	Radiometric Calibration				X				4-point calibration.
3.2.25	Check of Radiometric Calibration								Available for use as a quick check of Cal
3.2.26	Noise Measurements and Signal-to-Noise Ratio			X			X		
3.2.27	Verification of Solar Calibration				X	X			
3.2.28	TV Window Throughput Measurement				X				
3.2.29	Radiometric Calibration Characterization in Vacuum				X				2-point check
NA	"Flash Light Test"	X				X		X	Use light source to check video thru-put

* Test Phase Definitions:

Int..... Integration
MP.....Mass Properites and EMI
BL..... Baseline Functional
Cal..... System Calibration
PV....Post Vibration
TV..... Thermal Vacuum
QF.... Quick Functional Test

11/91
91-0838-1002B

POWER, COMMAND, AND TELEMETRY TESTS

11/91
91-0838-1003

GROUND ISOLATION TESTS ENSURE PROPER INTERCONNECTIONS

HUGHES

SANTA BARBARA RESEARCH CENTER
a subsidiary

- VERIFY THAT THE DC RESISTANCE BETWEEN THE UNIPOINT GROUNDS ARE $\geq$ 1 MΩ
- RECORD ALL MEASUREMENTS THAT ARE $\leq$10 MΩ
- A METER HAVING AN OPEN CIRCUIT VOLTAGE OF LESS THAN 100 mV WILL BE USED FOR THE MEASUREMENTS
- GROUND ISOLATION MEASUREMENTS ARE PERFORMED:
  - PRIOR TO THE INITIAL APPLICATION OF POWER TO THE SYSTEM
  - FOLLOWING THE REMATING OF A FLIGHT CONNECTOR OR REINSTALLATION OF A CIRCUIT CARD
  - AT THE DISCRETION OF THE REA OR TEST ENGINEER

GROUND ISOLATION TESTS ENSURE PROPER INTERCONNECTIONS (CONTINUED)

HUGHES

SANTA BARBARA RESEARCH CENTER
a subsidiary

- THE GROUND ISOLATION TEST MATRIX COULD LOOK SIMILAR TO THIS:

FROM (-) / TO (+)	CHASSIS GROUND	PRIMARY RETURN	SERVO RETURN	SIGNAL GROUND	SAFE-STATE RETURN	COMMAND RETURN	ANALOG TELEMETRY	SERVO TELEMETRY	TEMERATURE TELEMETRY
CHASSIS GROUND	NA								
PRIMARY RETURN		NA							
SERVO RETURN			NA					*	
SIGNAL GROUND				NA			*		
SAFE STATE RETURN					NA				
COMMAND RETURN						NA			*
ANALOG TELEMETRY				*			NA		
SERVO TELEMETRY			*			*		NA	
TEMPERATURE TELEMETRY									NA

*≤1.00 HMS

11/91
91-0838-1011

VERIFYING THE STEADY STATE POWER REQUIREMENTS OF THE SUBSYSTEMS

HUGHES

SANTA BARBARA RESEARCH CENTER
a subsidiary

- MEASURE THE POWER CONSUMPTION OF THESE SUBSYSTEMS USING CURRENT AND VOLTAGE TELEMETRY DATA AND COMPARE IT TO EXPECTED VALUES
  - STOW
  - POWER SUPPLY A
  - POWER SUPPLY B
  - ANALOG POWER SUPPLY
  - HEATERS
  - SERVO A
  - SERVO B
  - TILT DRIVE MOTOR
  - ANGULAR MOMENTUM COMPENSATOR

CHARACTERIZE THE NOMINAL OPERATING POWER REQUIREMENTS OF THE INSTRUMENT

HUGHES

SANTA BARBARA RESEARCH CENTER
a subsidiary

- MEASURE THE NOMINAL OPERATING POWER OF THE INSTRUMENT WHILE OPERATING IN THE FOLLOWING CONFIGURATION:
  - POWER SUPPLY A ..... ON
  - HEATERS ..... OFF
  - ANALOG POWER SUPPLY ..... ON
  - TIMING A ..... SELECT
  - SERVO A ..... SELECT
  - ANGLE MOMENTUM COMPENSATOR ..... ON
  - TILT DRIVE MOTOR..... OFF, THEN MEASURE WHILE TILT IS IN TRANSITION
  - EARTH DATA MODE ..... SELECT

VERIFYING THE PRIMARY AND REDUNDANT COMMAND AND TELEMETRY PATHS

HUGHES

SANTA BARBARA RESEARCH CENTER
a subsidiary

	MODE		
ITEM	LAUNCH	SERVO A	SERVO B
POWER SUPPLY A	X	X	X
POWER SUPPLY B	X	X	X
STOW ON	X	X	X
STOW OFF	X	X	X
ANALOG POWER		X	X
TIMING A		X	X
TIMING		X	X
TILT A		X	X
TILT B		X	X
ANGLE MOM COMP ON		X	X
ANGLE MOM COMP OFF		X	X
HEATERS		X	X
EARTH DATA MODE		X	X
SOLAR DATA MODE		X	X
SOLAR DOOR		LIMITED	LIMITED

VERIFYING THE PRIMARY AND REDUNDANT COMMAND AND TELEMETRY PATHS (CONTINUED)

HUGHES

SANTA BARBARA RESEARCH CENTER
a subsidiary

- ISSUE APPLICABLE DIGITAL COMMANDS FOR EACH MODE
- TELEMETRY VERIFICATIONS:
  - DIGITAL TELEMETRY — VERIFY TELEMETRY INDICATES THE EXPECTED STATE
  - ANALOG TELEMETRY — MEASURE VOLTAGE, CURRENT, TEMPERATURE, POSITION AND PHASE ERROR. VERIFY THAT THE MEASURED VALUES ARE AS EXPECTED
  - SERIAL TELEMETRY — ISSUE FOUR SERIAL COMMANDS: 80 BITS OF 0000..., 1111..., 1010..., AND 0101...
    — VERIFY THAT THE RETURN VALUES EQUAL THE ISSUED VALUES

NOTE: A COMPLETE EXECUTE/NON-EXECUTE COMMAND AND TELEMETRY VERIFICATION IS PERFORMED DURING THE INTEGRATION PHASE

ALL UNIQUE TDI COMBINATIONS WILL BE TESTED

HUGHES

SANTA BARBARA RESEARCH CENTER
a subsidiary

- VERIFY THE PERFORMANCE OF TDI BY ISSUING 1:1, 2:1, 3:1 AND 4:1 COMMANDS FOR EACH BAND

- VIEW RETICLE PATTERN DATA COLLECTED TO DETECT ANY ERROR

CROSS STRAP CHECKS VERIFY THE INSTRUMENT'S PERFORMANCE UNDER NUMEROUS CONFIGURATIONS

HUGHES

SANTA BARBARA RESEARCH CENTER
a subsidiary

- COMMAND AND TELEMETRY SIDE-A IS CHECKED USING THE FOLLOWING CONFIGURATIONS:

	COMMAND AND TELEMETRY SIDE-A															
CONFIGURATION	A1	A2	A3	A4	A5	A6	A7	A8	B1	B2	B3	B4	B5	B6	B7	B8
POWER SUPPLY A /B	A	A	A	A	A	A	A	A	B	B	B	B	B	B	B	B
TIMING A/B	A	A	A	A	B	B	B	B	B	B	B	B	A	A	A	A
SERVO A/B	A	A	B	B	B	B	A	A	B	B	A	A	A	A	B	B
TILT DRIVE A/B	A	B	A	B	A	B	A	B	B	A	B	A	B	A	B	A

- WHILE IN EACH OF THE CONFIGURATIONS, THE VIDEO THROUGHPUT WILL BE CHECKED USING AN EXTERNAL SOURCE

CROSS STRAP CHECKS VERIFY THE INSTRUMENT'S PERFORMANCE UNDER NUMEROUS CONFIGURATIONS

HUGHES

SANTA BARBARA RESEARCH CENTER
a subsidiary

- COMMAND AND TELEMETRY SIDE-B IS CHECKED USING THE FOLLOWING CONFIGURATIONS:

	COMMAND AND TELEMETRY SIDE-B															
CONFIGURATION	A1	A2	A3	A4	A5	A6	A7	A8	B1	B2	B3	B4	B5	B6	B7	B8
POWER SUPPLY A /B	A	A	A	A	A	A	A	A	B	B	B	B	B	B	B	B
TIMING A/B	A	A	A	A	B	B	B	B	B	B	B	B	A	A	A	A
SERVO A/B	A	A	B	B	B	B	A	A	B	B	A	A	A	A	B	B
TILT DRIVE A/B	A	B	A	B	A	B	A	B	B	A	B	A	B	A	B	A

- WHILE IN EACH OF THE CONFIGURATIONS, THE VIDEO THROUGHPUT WILL BE CHECKED USING AN EXTERNAL SOURCE

POSITIONAL MEASUREMENTS

11/91
91-0838-1016

DYNAMIC IFOV, BBR, AND MTF MEASUREMENTS ARE PERFORMED ON A COLLIMATOR

HUGHES

SANTA BARBARA RESEARCH CENTER
a subsidiary

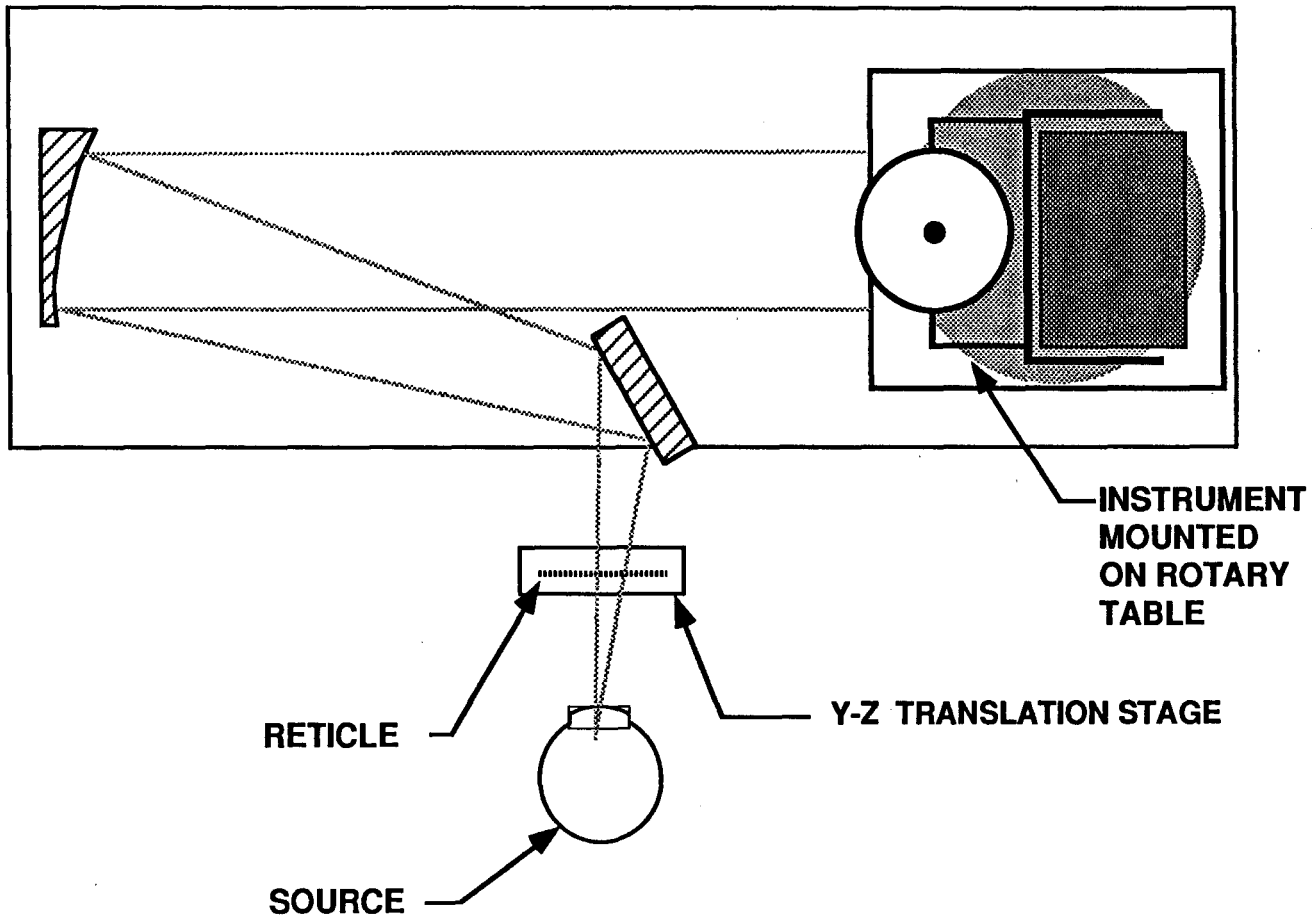

11/91
91-0838-1027

INSTRUMENT IS ALIGNED ELECTRONICALLY TO A VISIBLE RETICLE PATTERN

HUGHES

SANTA BARBARA RESEARCH CENTER
a subsidiary

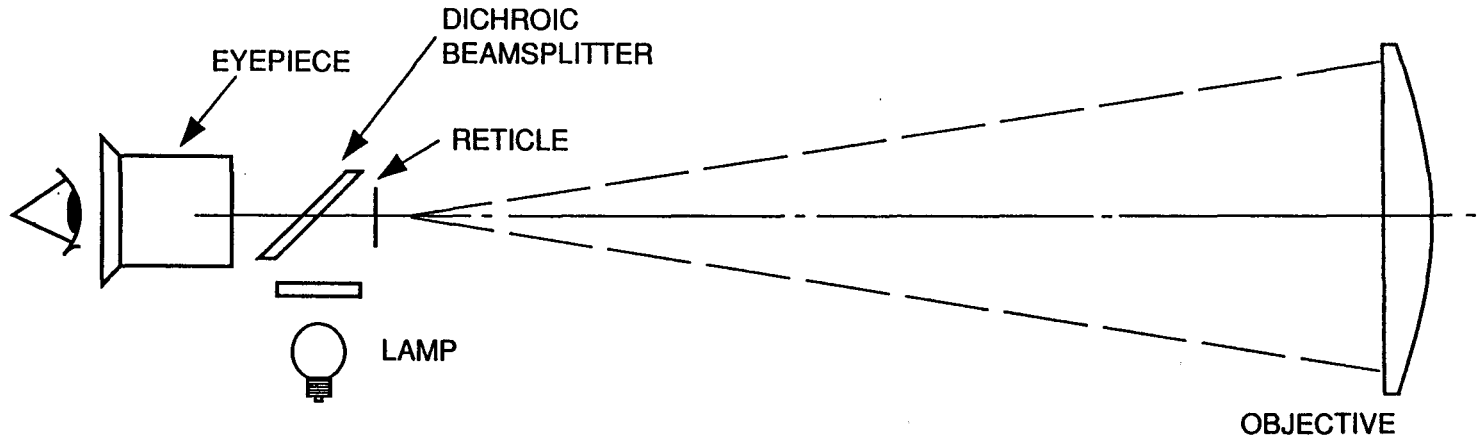

- TO DETECT ALIGNMENT CUBE LOCATION VISUALLY ALIGN REFLECTED RETICLE PATTERN ONTO ITSELF
- TO DETECT PIXEL 643 LOCATION EXAMINE OUTPUT SIGNALS TO DETERMINE WHEN INSTRUMENT IS CENTERED ON RETICLE

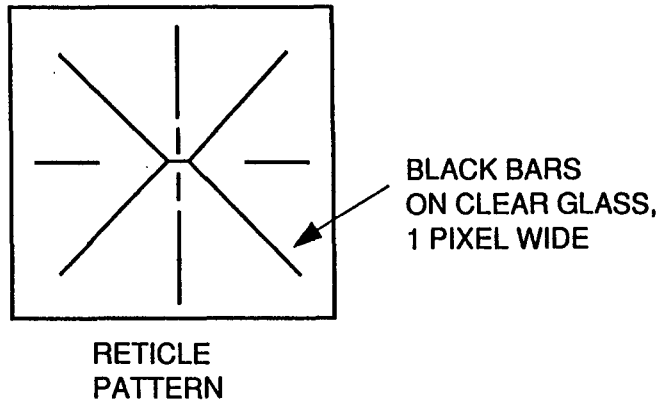

11/91
91-0838-1041

SPECTRAL BAND COREGISTRATION MEASUREMENTS "MAP-OUT" THE RELATIVE LOCATIONS OF THE SPECTRAL BANDS

HUGHES

SANTA BARBARA RESEARCH CENTER
a subsidiary

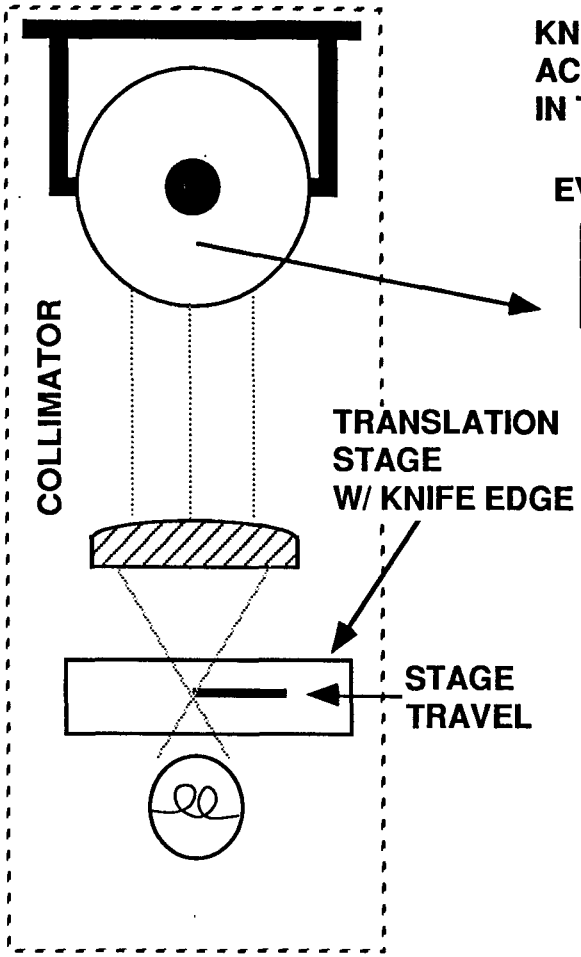

KNIFE EDGE TRANSLATED ACROSS SPECTRAL BAND IN THE ALONG-SCAN AXIS

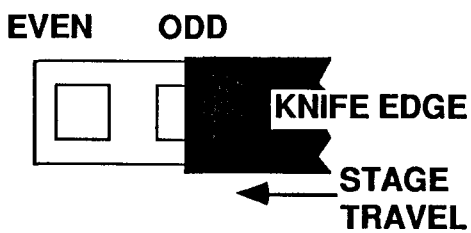

KNIFE EDGE TRANSLATED ACROSS SPECTRAL BANDS IN THE CROSS-SCAN AXIS

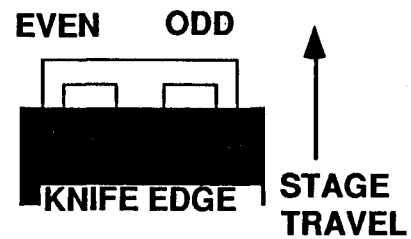

- FULL POWER OF EACH SPECTRAL BAND IS NOTED.
- KNIFE EDGE IS SCANNED ACROSS THE FOCAL PLANE UNTIL HALF-POWER COORDINATE IS LOCATED FOR A SELECTED BAND.
- THE OUTPUT OF THE 7 REMAINING BANDS IS MEASURED, AND COMPARED TO THEIR RESPECTIVE FULL POWER VALUES.
- MEASUREMENT IS PERFORMED IN TWO AXES, AS ILLUSTRATED ABOVE.

11/91
91-0838-1031

IFOV IS DETERMINED BY MEASURING THE ANGULAR DISTANCE BETWEEN THE HALF-POWER POINTS OF A DETECTOR

HUGHES

SANTA BARBARA RESEARCH CENTER
a subsidiary

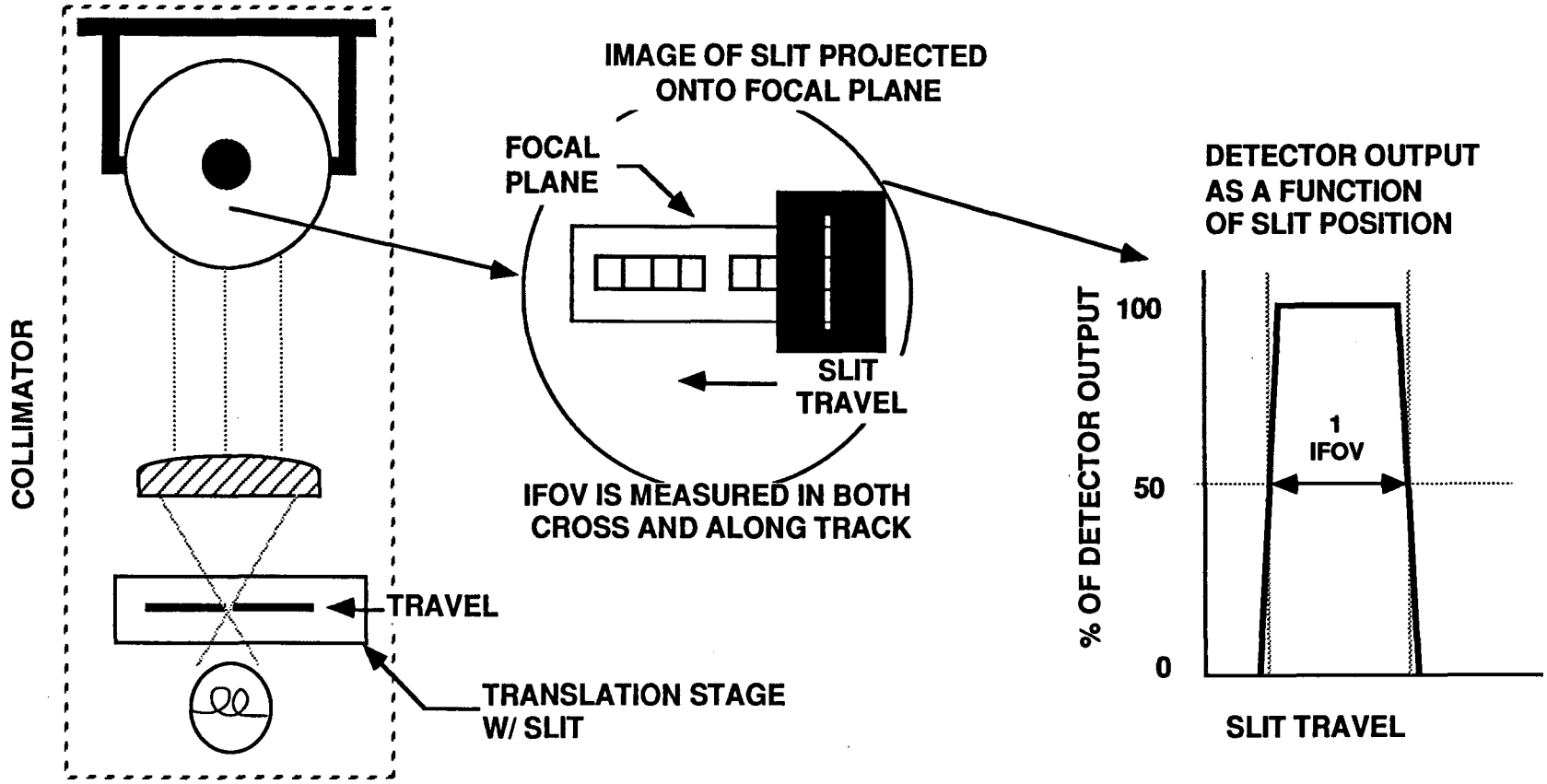

11/91
91-0838-1028

MODULATION TRANSFER FUNCTION (MTF) MEASUREMENTS REVEAL THE QUALITY OF THE IMAGE

HUGHES

SANTA BARBARA RESEARCH CENTER
a subsidiary

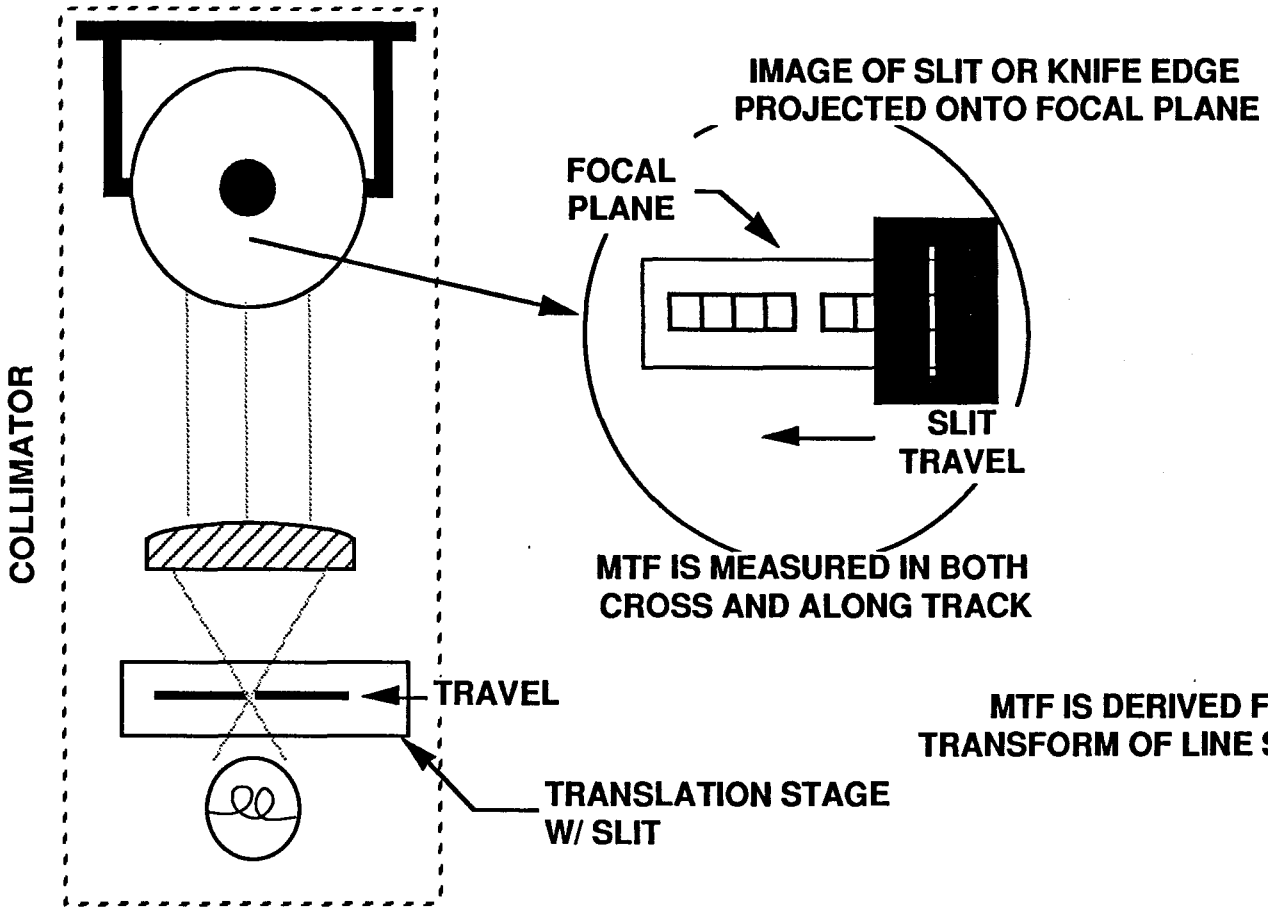

MTF IS DERIVED FROM FOURIER TRANSFORM OF LINE SPREAD FUNCTION

11/91
91-0838-1029

MECHANISM FUNCTIONAL TESTS

11/91
91-0838-23

MECHANICAL FUNCTION TESTS: CHARACTERIZING THE INSTRUMENT'S MECHANISMS

HUGHES

SANTA BARBARA RESEARCH CENTER
a subsidiary

- ALL TIMED EVENTS ARE CONTROLLED AND TIMED WITH THE SeaWiFS TEST SET

1. MOTOR START-UP TIME
   - MEASURE THE STARTUP TIME FOR THE TELESCOPE, HALF-ANGLE MIRROR, AND ANGULAR MOMENTUM COMPENSATOR MOTORS:

     START TEST WITH THE TEST MOTOR AT ZERO RPM

     COMMAND MOTOR TO THE ON STATE, START THE "TEST CLOCK"

     MONITOR THE APPROPRIATE TELEMETRY POINT UNTIL A PHASE LOCK FOR THE MOTOR UNDER TEST IS INDICATED. RECORD THE ELAPSED TIME

     REPEAT TEST FOR THE BACKUP SET OF TELESCOPE AND HALF-ANGLE MOTORS

MECHANICAL FUNCTION TESTS: CHARACTERIZING THE INSTRUMENT'S MECHANISMS (CONTINUED)

HUGHES

SANTA BARBARA RESEARCH CENTER
a subsidiary

2. TORQUE MARGIN MEASUREMENTS

- PERFORM TEST ON TELESCOPE (A&B), HALF ANGLE (A&B), AND ANGULAR MOMENTUM COMPENSATOR MOTORS
- CALCULATE THE POINT AT WHICH THE MOTOR UNDER TEST LOSES PHASE SYNCHRONIZATION

THE MOTOR PHASE ERROR, OR CURRENT TELEMETRY POINTS (ANALOG TLMY) WILL BE MEASURED IN-AIR AND IN VACUUM. THE RESULTING DATA WILL BE USED TO CALCULATE THE MOTOR TORQUE MARGIN

MECHANICAL FUNCTION TESTS: CHARACTERIZING THE INSTRUMENT'S MECHANISMS (CONTINUED)

HUGHES

SANTA BARBARA RESEARCH CENTER
a subsidiary

3. STOW TIME
   - MEASURE THE TIME REQUIRED TO STOW THE TELESCOPE FROM ITS NORMAL OPERATING SPEED

4. TILT TRANSITION RATE
   - MEASURE THE TIME REQUIRED FOR THE TILT MOTOR TO TRANSITION FROM THE FORWARD LIMIT TO THE REVERSE LIMIT

MASS PROPERTIES AND EMC

11/91
91-0838-1039A

MASS PROPERTIES MEASUREMENT

HUGHES

SANTA BARBARA RESEARCH CENTER
a subsidiary

- MOMENT OF INERTIA
  - CALCULATION (TO ±20%)
- CENTER OF GRAVITY
  - BALANCE ON KNIFE EDGE
- WEIGHT

ELECTROMAGNETIC COMPATIBILITY: VIDEO NOISE DUE TO ANY RF FIELD

HUGHES

SANTA BARBARA RESEARCH CENTER
a subsidiary

- A FLIGHT TRANSMITTER, ANTENNA AND SeaWiFS/SEA STAR SPACE CRAFT SHELF SIMULATOR WILL BE LOANED TO SBRC FROM OSC
- MOUNT INSTRUMENT ON SHELF AND CONFIGURE INSTRUMENT FOR COHERENT NOISE
- PERFORM COHERENT NOISE TEST WHILE EXPOSED TO THE SPECIFIED FIELDS

VIBRATION TESTING SIMULATES THE LAUNCH ENVIRONMENT

HUGHES

SANTA BARBARA RESEARCH CENTER
a subsidiary

- RELAY COMMANDS SET TO THE LAUNCH CONFIGURATION PRIOR TO TEST
- STOW MECHANISM IS POWERED AND ENABLED DURING THE TEST

AXIS	FREQUENCY (Hz)	LEVEL (g^2/Hz)	DURATION
ALL (X, Y, AND Z)	20-800	0.030	3 MINUTES PER AXIS
	800-1000	13.0 db/oct	
	1000-1250	0.080	
	1250-2000	-11.7 db/oct	
	2000	0.011	

OVERALL ACCELERATION LEVEL: 8.7 g rms

SEVERAL TYPES OF FIXTURES REQUIRED TO SUPPORT TEST AND INTEGRATION

HUGHES

SANTA BARBARA RESEARCH CENTER
a subsidiary

- FIXTURES:
  - INSTRUMENT SUPPORT FIXTURE — HOLDS SCANNER AND ELECTRONICS MODULE IN THEIR RELATIVE FLIGHT POSITION. WILL BE USED FOR CALIBRATION, THERMAL VACUUM AND GENERAL TESTS
  - SCANNER VIBRATION FIXTURE
  - ELECTRONICS MODULE VIBRATION FIXTURE
  - SCANNER TEMPERATURE CONTROL PLATE - USING LN2 AND HEATER STRIPS, IT WILL CONTROL THE SCANNER MOUNTING SURFACE TEMPERATURE DURING THERMAL VACUUM.

RADIOMETRIC MEASUREMENTS AND CALIBRATION

11/91
91-0838-1018

INSTRUMENT CALIBRATION SEQUENCE

HUGHES

SANTA BARBARA RESEARCH CENTER
a subsidiary

- PRE INTEGRATION:
  - CHARACTERIZE OPTICAL COMPONENTS
    - SPECTRAL BAND PASS FILTERS
    - DICHROIC FILTERS
    - LENSES
    - MIRRORS
  - USE WITNESS PIECES

INSTRUMENT CALIBRATION SEQUENCE (CONTINUED)

HUGHES

SANTA BARBARA RESEARCH CENTER
a subsidiary

- POST INTEGRATION:
  - PERFORM PRE-CALIBRATION RADIOMETRIC MEASUREMENTS
  - ADJUST VIDEO POST AMPLIFIER GAINS
  - PERFORM GAIN AND OFFSET MEASUREMENTS
  - RADIOMETRIC CALIBRATION (PRE-THERMAL VACUUM)
  - PERFORM SCAN MODULATION MEASUREMENTS
  - CALIBRATE SOLAR DIFFUSER
  - PERFORM RELATIVE SPECTRAL RESPONSE MEASUREMENTS
  - PERFORM SENSITIVITY VARIATION MEASUREMENTS IN THERMAL VACUUM (INCLUDING CHAMBER WINDOW THROUGHPUT MEASUREMENTS)
  - PERFORM POST-THERMAL VACUUM FINAL RADIOMETRIC CALIBRATION

NEW INTEGRATING SPHERE HAS A BETTER DYNAMIC RANGE

HUGHES

SANTA BARBARA RESEARCH CENTER
a subsidiary

- SCHEDULED TO BE AT SBRC IN EARLY '92
- CALIBRATION COMPLETE IN TIME FOR CALIBRATION

48-INCH INTEGRATING SPHERE

HUGHES

SANTA BARBARA RESEARCH CENTER
a subsidiary

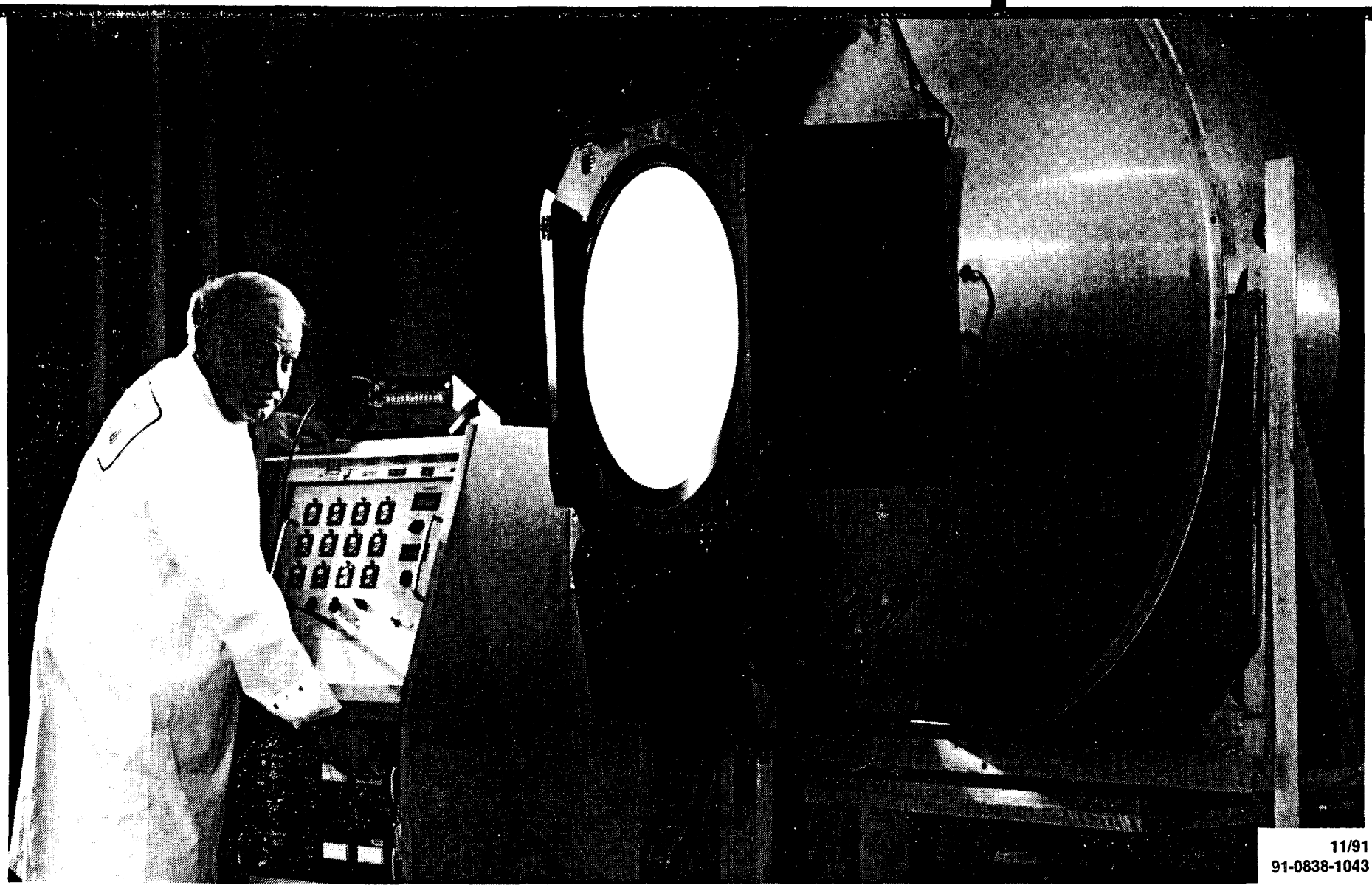

11/91
91-0838-1043

"IN-AIR" RADIOMETRIC MEASUREMENT SETUP

HUGHES

SANTA BARBARA RESEARCH CENTER
a subsidiary

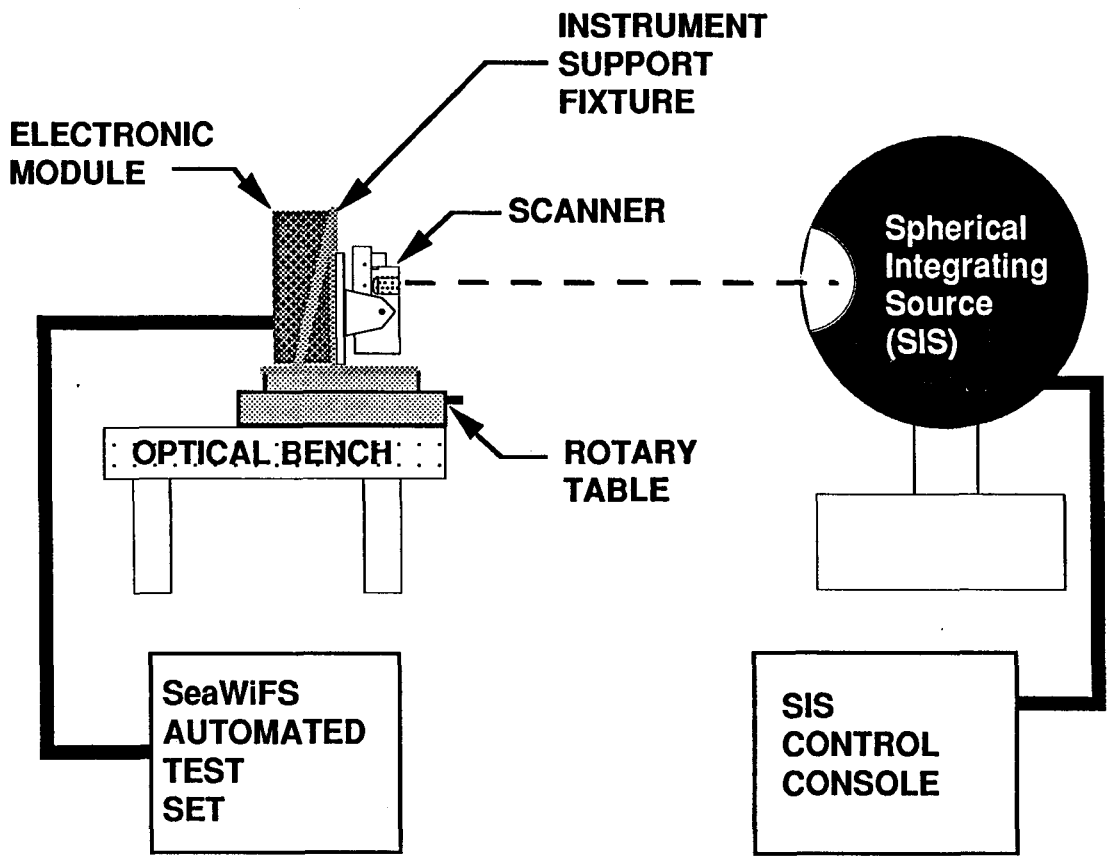

11/91
91-0838-1022

SCAN MODULATION MEASUREMENT IS PERFORMED AT 5 ANGLES

HUGHES

SANTA BARBARA RESEARCH CENTER
a subsidiary

ROTATE INSTRUMENT THROUGH ITS EARTH-VIEW "WINDOW", POINTING PIXELS 1, 321, 643, 964, AND 1285 AT THE NADIR SCAN ANGLE.

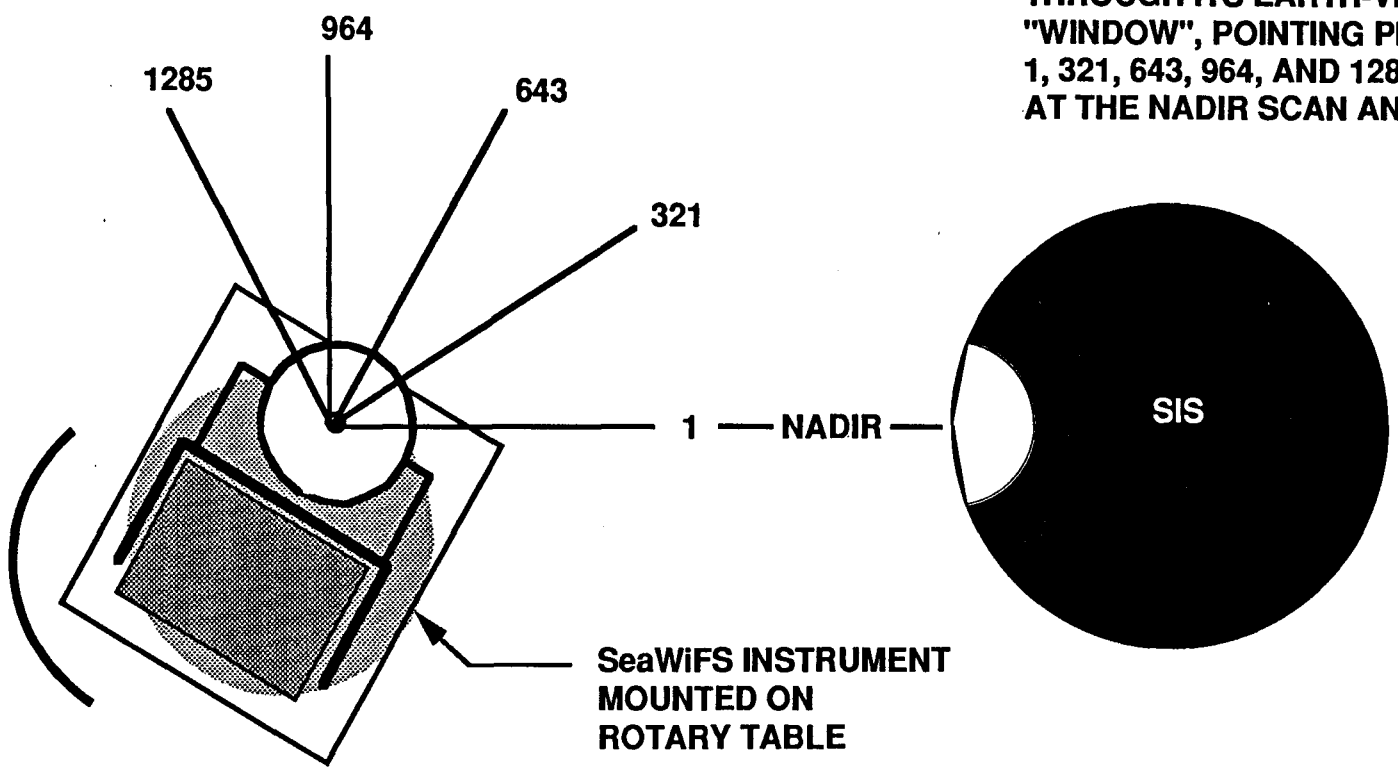

11/91
91-0838-1024

POLARIZATION SENSITIVITY MEASUREMENTS WILL DEMONSTRATE INSTRUMENT'S IMMUNITY TO EFFECTS OF POLARIZED LIGHT

HUGHES

SANTA BARBARA RESEARCH CENTER
a subsidiary

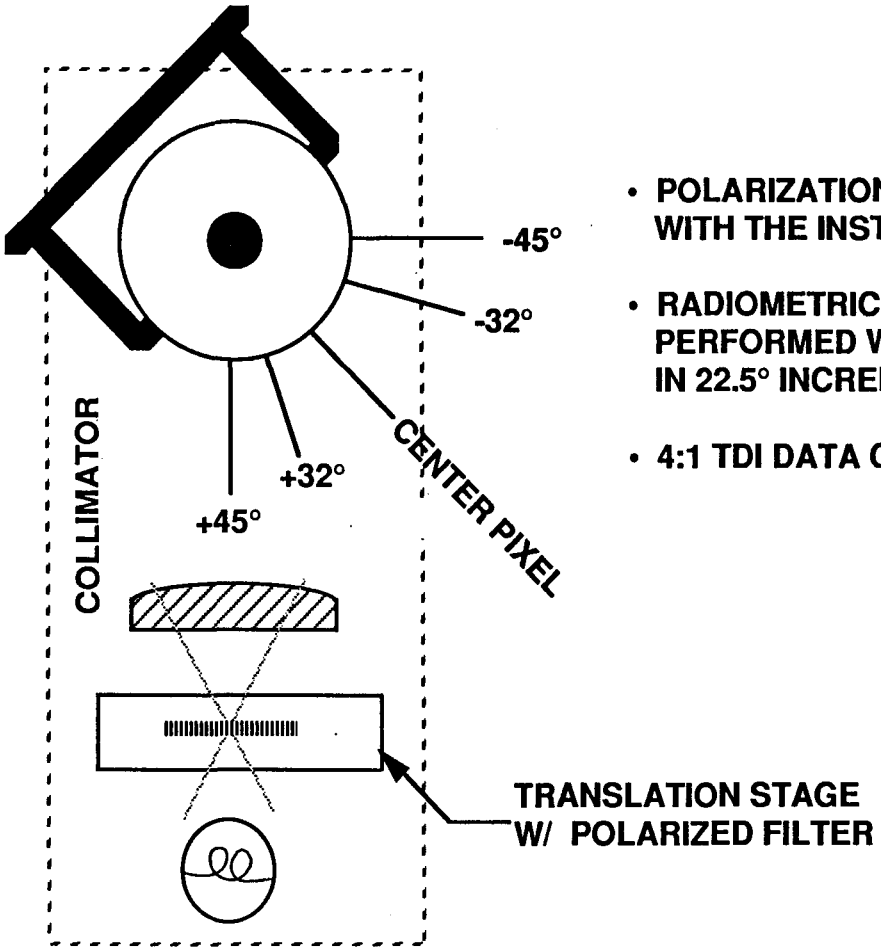

- POLARIZATION SENSITIVITY MEASUREMENTS ARE MADE WITH THE INSTRUMENT AT CENTER PIXEL, ± 45° AND ± 32°.
- RADIOMETRIC SENSITIVITY MEASUREMENTS ARE PERFORMED WITH THE FILTER ROTATED FROM 0° TO 360° IN 22.5° INCREMENTS (16 POSITIONS)
- 4:1 TDI DATA COLLECTED

COHERENT NOISE TESTS ARE PERFORMED UNDER SEVERAL OPERATING CONFIGURATIONS

HUGHES

SANTA BARBARA RESEARCH CENTER
a subsidiary

- COHERENT NOISE RATIO OF A SPECTRAL BAND IS THE RATIO OF THE MEASURED NOISE IN A 12 Hz BANDWIDTH TO THE TOTAL NOISE MEASURED IN A SPECTRAL BAND
- INSTRUMENT WILL BE CONFIGURED FOR "NORMAL" OPERATIONS AND NUMEROUS "CROSS-STRAPPED" MODES
- GAIN 2 IS SELECTED
- 1:1 TDI, AND 4:1 TDI DATA COLLECTED
- COLLECT 1285 PIXELS (±58.3°) PER SAMPLE
- DETERMINE THE COHERENT NOISE RATIO OVER A FREQUENCY OF 48 Hz TO 11.78 KHz

BRIGHT TARGET RECOVERY MEASURES TIME FOR THE OUTPUT TO DROP FROM SATURATION (L_{BRIGHT}) TO THE OFFSET LEVEL WITHIN 0.5% $L_{TYPICAL}$

HUGHES

SANTA BARBARA RESEARCH CENTER
a subsidiary

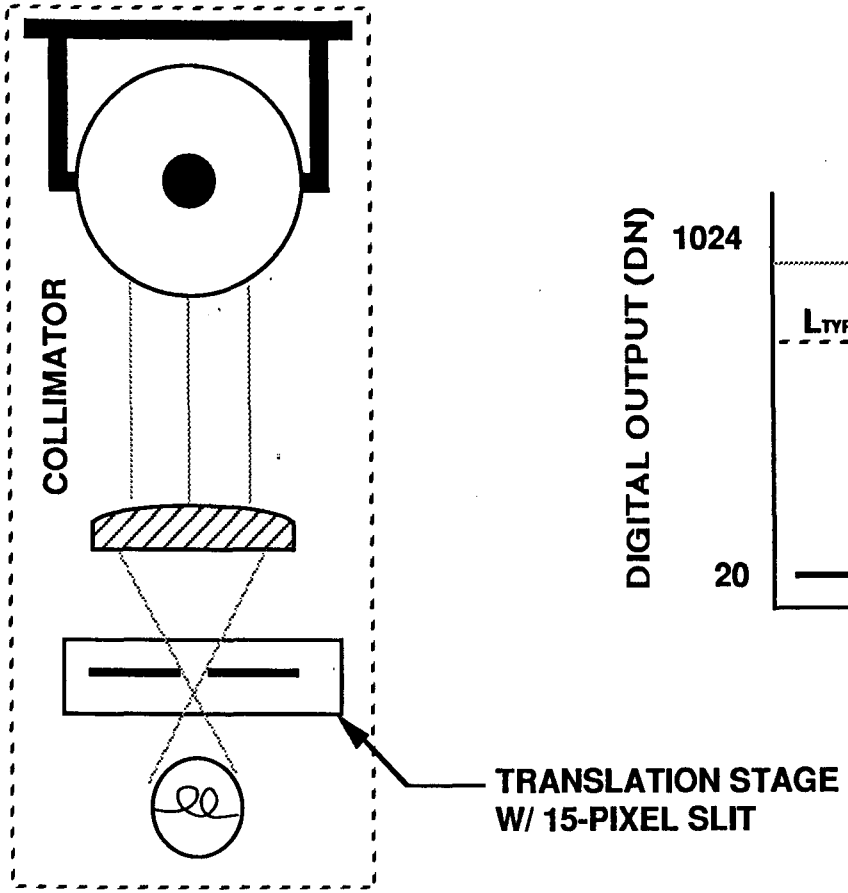

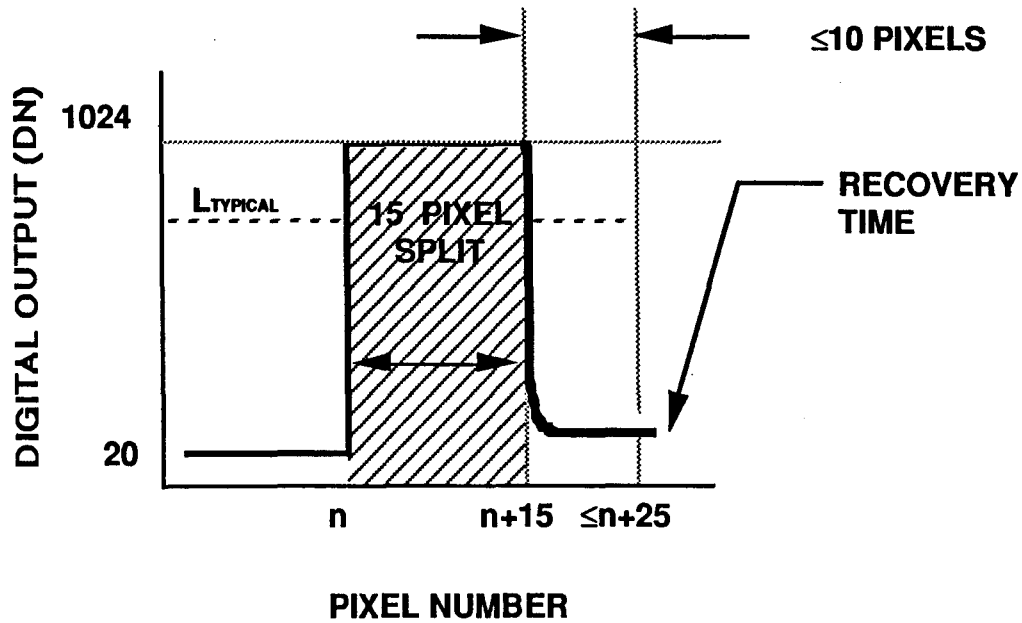

11/91
91-0838-1030

RELATIVE SPECTRAL RESPONSE MEASUREMENTS ARE MADE BEFORE AND AFTER THERMAL VACUUM TESTS

HUGHES

SANTA BARBARA RESEARCH CENTER
a subsidiary

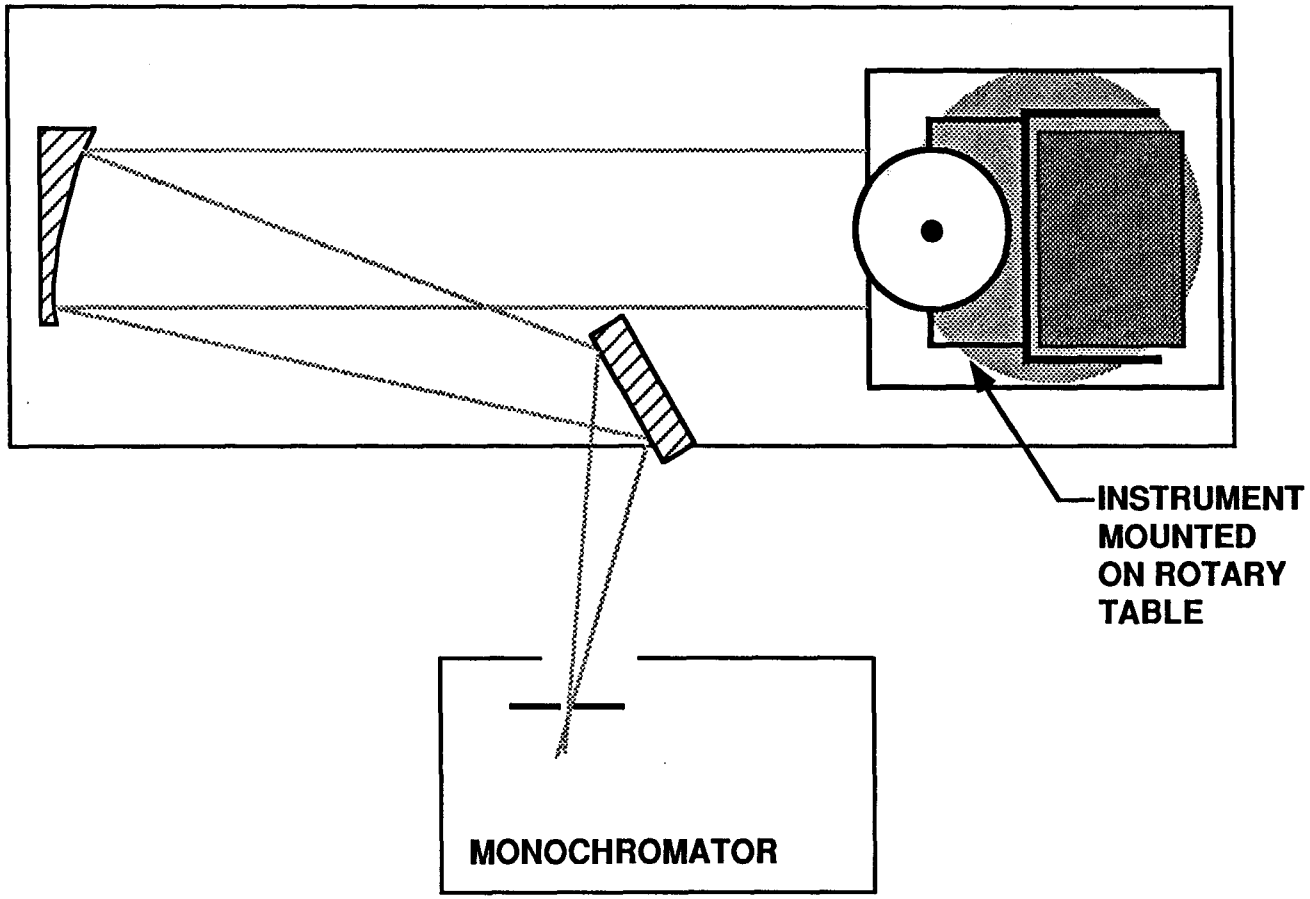

11/91
91-0838-1023

CALIBRATION WAVEFORM FROM TEST SET PROVIDES A MEANS FOR CHECKING GAIN AND OFFSET FACTORS

HUGHES

SANTA BARBARA RESEARCH CENTER
a subsidiary

TYPICAL GAIN RELATIONSHIPS

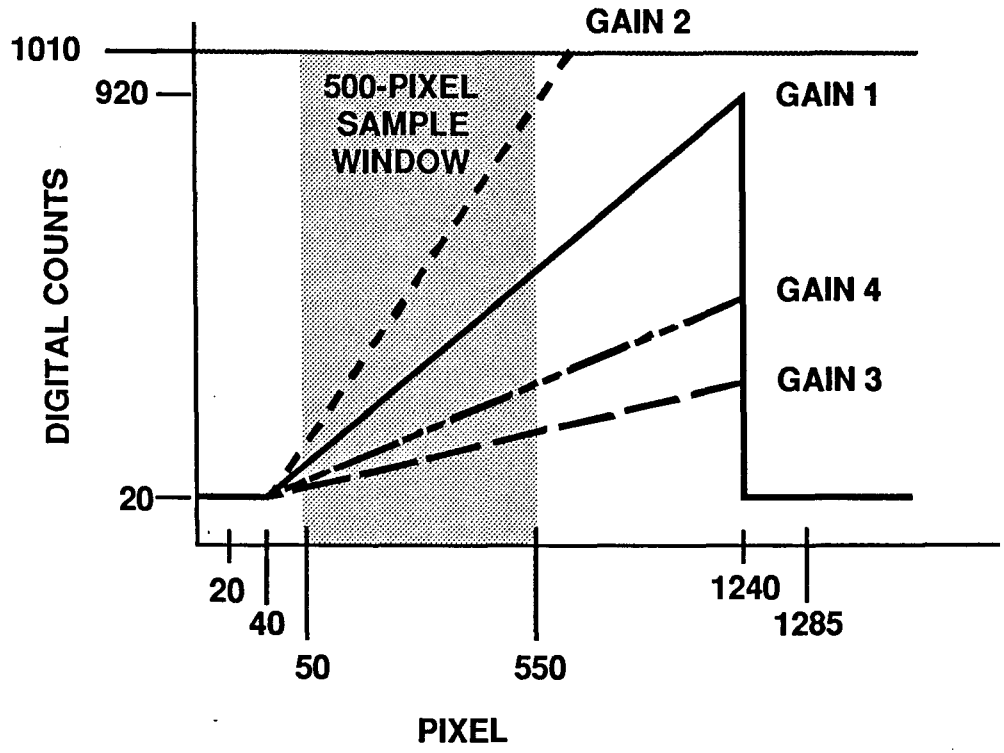

- INPUT WAVEFORM FROM TEST SET IS ≈ 90% OF FULL SCALE WITH RESPECT TO GAIN 1.
- COMMANDABLE GAIN VALUES FOR EACH GAIN SETTING ARE COLLECTED IN A "WINDOW" ≈500 PIXELS WIDE
- SLOPE OF GAIN 2, 3, AND 4 RAMPS ARE NORMALIZED TO TO GAIN 1'S, GIVING THE RELATIVE GAIN FACTORS WITH RESPECT TO GAIN 1
- COLLECT 1:1 TDI, AND 4:1 TDI

SETTING THE RADIOMETRIC CALIBRATION OF THE INSTRUMENT

HUGHES

SANTA BARBARA RESEARCH CENTER
a subsidiary

- BTCE VIDEO TESTS ARE DESIGNED FOR COLLECTING RADIOMETRIC DATA
  - USE SPHERICAL INTEGRATING SOURCE
  - PLANNED SCANNER COLLECT "WINDOW": 10 SCAN LINES, EACH CONTAINING 21 PIXELS (NADIR SCAN ANGLE ±10 PIXELS)
- PRELIMINARY CALIBRATION MEASUREMENTS:
  - TWO RADIANCE LEVELS: NORMAL SCENE LEVEL AND DARK (ZERO)
    - COLLECT 1:1 AND 4:1 TDI DATA
  - DATA USED TO SELECT THE VIDEO POST AMP GAIN AND OFFSET COMPONENT VALUES
  - DATA COLLECTION ENABLES SIGNAL TO NOISE RATIO (SNR) MEASUREMENTS

RADIOMETRIC CALIBRATION OF THE INSTRUMENT WILL MEASURE ABSOLUTE SENSITIVITY

HUGHES

SANTA BARBARA RESEARCH CENTER
a subsidiary

- AMBIENT MEASUREMENTS:
  - FOUR APPROXIMATELY EQUALLY SPACED RADIANCE LEVELS RANGING FROM AS NEAR SATURATION AS POSSIBLE TO DARK
  - COLLECT 4:1 TDI DATA
- THERMAL VACUUM MEASUREMENTS:
  - A MINIMUM OF TWO RADIANCE LEVELS: AS NEAR SATURATION AS POSSIBLE, AND ZERO
  - COLLECT 4:1 DATA
  - DATA COLLECTED DURING 40% DUTY PERIODS

SOLAR CALIBRATOR WILL BE CHARACTERIZED USING A RELATIVE MEASUREMENT TECHNIQUE

HUGHES

SANTA BARBARA RESEARCH CENTER
a subsidiary

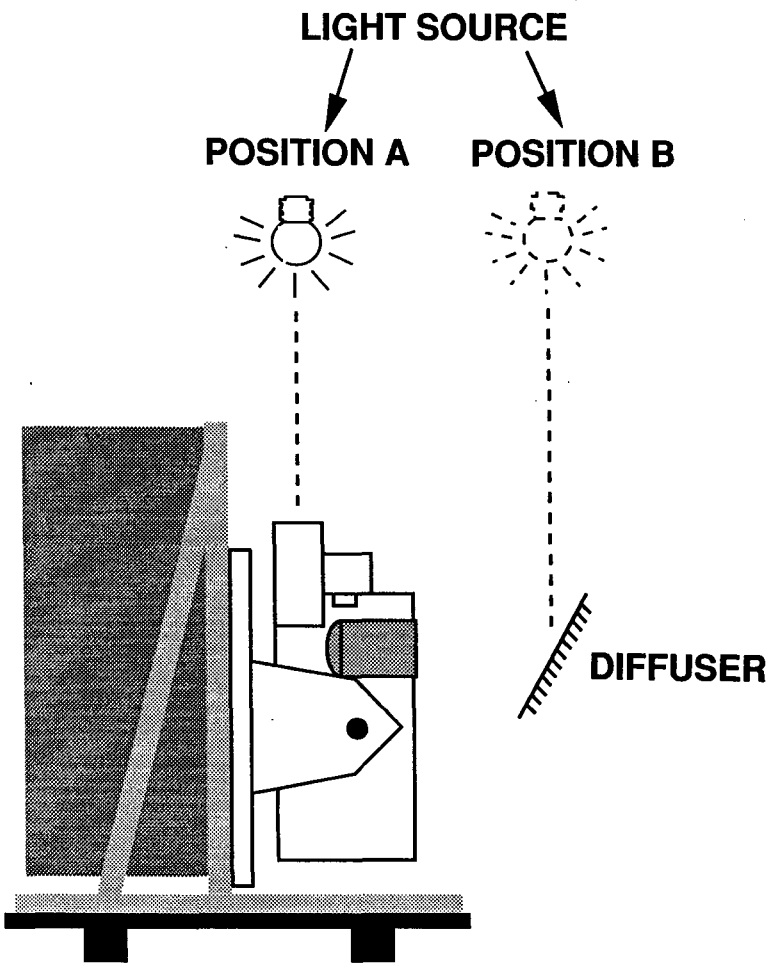

RATIO OF SCANNER SIGNALS AT TWO LIGHT SOURCE LOCATIONS WILL BE USED TO CALIBRATE CALIBRATOR

11/91
91-0838-1024A

SeaWiFS/THERMAL VACUUM CHAMBER LAYOUT

HUGHES

SANTA BARBARA RESEARCH CENTER
a subsidiary

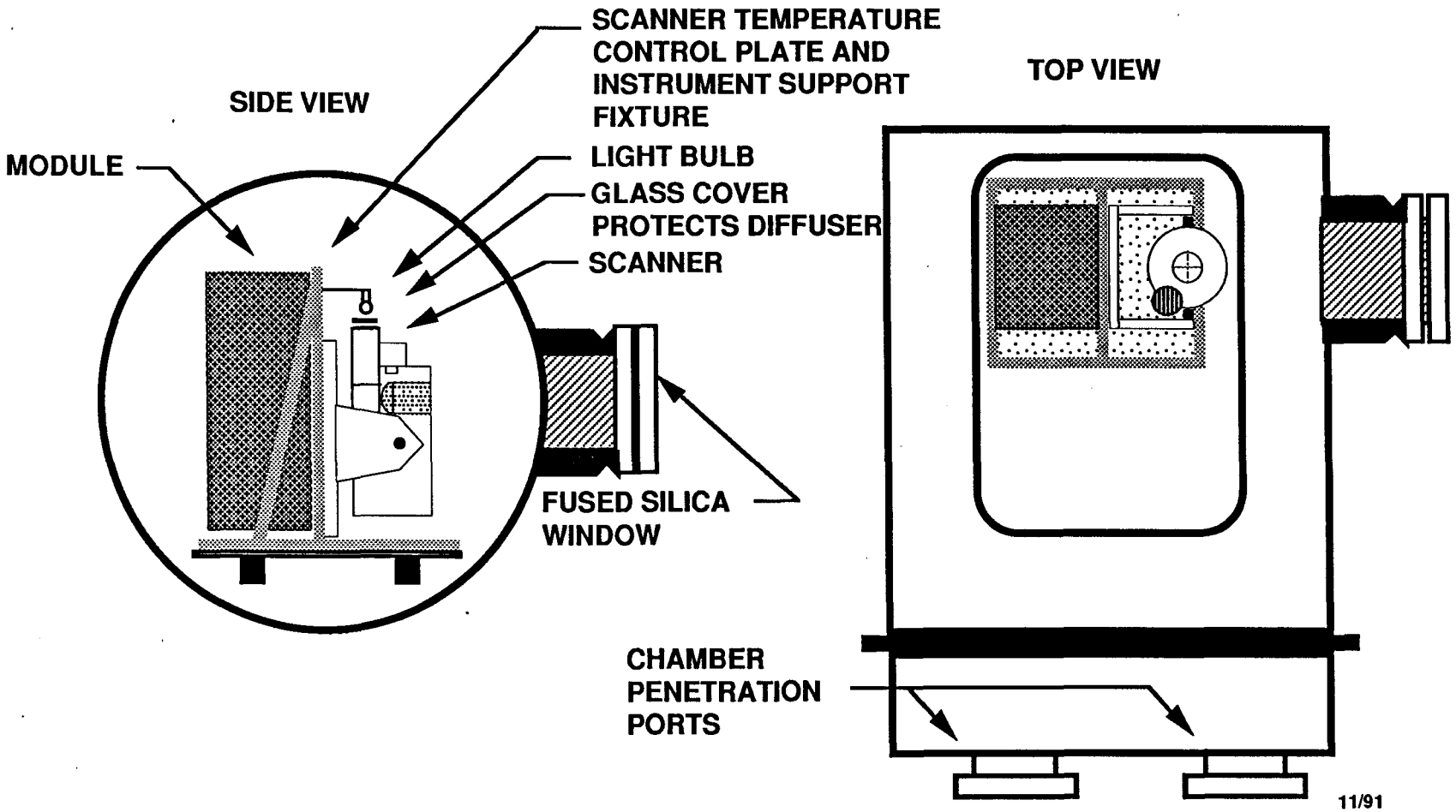

11/91
91-0838-1038

THERMAL VACUUM TESTING IS PERFORMED AT THREE TEMPERATURES

HUGHES

SANTA BARBARA RESEARCH CENTER
a subsidiary

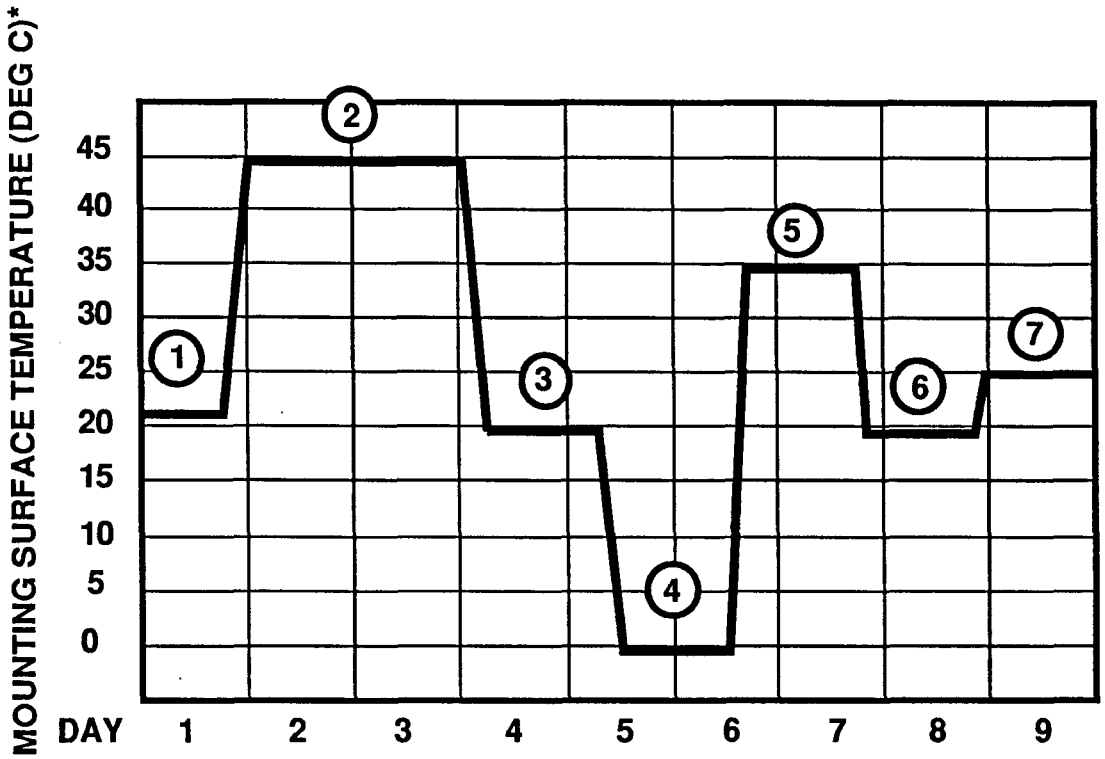

NOTE: TIME AT TEMPERATURE PLATEAUS AND TEMPERATURE TRANSITION CURVES ARE SYMBOLIC.

* THERMAL INPUTS WILL BE DESIGNED TO VERIFY THERMAL MODEL

TEST EVENTS:

1. INSTALL INSTRUMENT PERFORM WINDOW THRU-PUT MEASUREIMENT.
2. BAKE OUT AT 45 ° C.
3. CALIBRATION CHECK AND TEST AT 20 ° C.
4. CALIBRATION CHECK AND TEST AT 0 ° C.
5. CALIBRATION CHECK AND TEST AT 35 ° C.
6. CALIBRATION CHECK AND TEST AT 20 ° C.
7. RETURN TO AMBIENT. PERFORM IN-AIR CALIBRATION CHECK. REMOVE INSTRUMENT FROM CHAMBER .

11/91
91-0838-1039

THE "QUICK FUNCTIONAL" CHECKS THE OVERALL HEALTH OF THE SYSTEM

HUGHES

SANTA BARBARA RESEARCH CENTER
a subsidiary

- TESTS PERFORMED:
  - POWER
  - COMMAND AND TELEMETRY VERIFICATION
  - GAIN AND OFFSET MEASUREMENTS
  - CLOCK FREQUENCY MEASUREMENT
  - MECHANICAL FUNCTIONAL
  - TEST CONNECTOR VOLTAGES
  - CHECK OF RADIOMETRIC RESPONSE ("FLASHLIGHT TEST")