SeaWiFS
PRELIMINARY DESIGN REVIEW

JULY 16 and 17, 1991

HUGHES

SANTA BARBARA RESEARCH CENTER
a subsidiary

7/91
91-0441-000

DM#LE46-0003

AGENDA – DAY 1

HUGHES
SANTA BARBARA RESEARCH CENTER
a subsidiary

INTRODUCTION	DICK ROBERTS	9:00
SYSTEMS ENGINEERING	ALAN HOLMES	9:15
BREAK		10:30
OPTICAL DESIGN	RICHARD CLINE	10:45
LUNCH		12:00
MECHANICAL DESIGN	BILL FINCHER	1:00
FOCAL PLANE DESIGN	BRAD PETERSON	1:30
ELECTRONICS DESIGN	DAVE ROGERS	2:00
BREAK		2:30
ELECTRONICS DESIGN (CONT)	DAVE ROGERS	2:45
ELECTRONIC MODULE DESIGN	STEVE HERNANDEZ	4:00
ADJOURN		4:30

AGENDA – DAY 2

HUGHES
SANTA BARBARA RESEARCH CENTER
a subsidiary

ANALYSIS • STRUCTURAL • THERMAL	PAUL BORTFELDT	9:00
RELIABILITY	GEORGE GRITT ED SCHULTZ	9:30
BREAK		10:00
TEST EQUIPMENT	MARK PAUL	10:15
SYSTEM INTEGRATION, ALIGNMENT, AND TEST	ALAN HOLMES	10:40
DISCUSSION		11:30
ADJOURN		12:00

INTRODUCTION

R. ROBERTS

7/91
91-0441-0

PRELIMINARY REVIEW OBJECTIVES

HUGHES

SANTA BARBARA RESEARCH CENTER
a subsidiary

- REVIEW CONCEPT AND DESIGN APPROACH FOR
  - SCANNER
  - ELECTRONICS MODULE
- DESCRIBE DESIGN ANALYSIS AND PERFORMANCE PREDICTIONS

SeaStar
NASA OCEAN COLOR DATA

HUGHES
SANTA BARBARA RESEARCH CENTER
a subsidiary

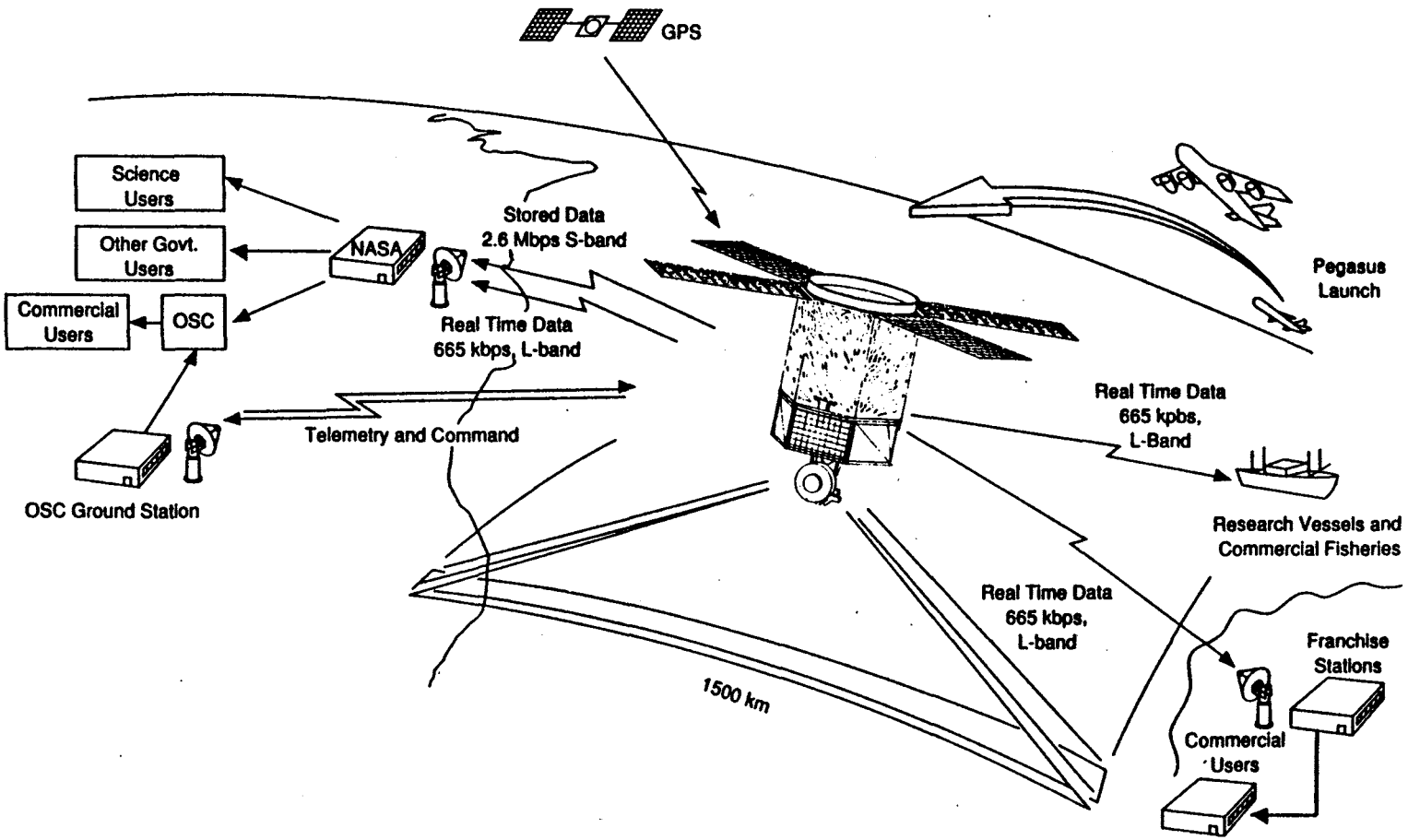

7/91
91-0441-1

OCEAN COLOR USER COMMUNITY DESIGN DRIVERS

HUGHES

SANTA BARBARA RESEARCH CENTER
a subsidiary

- HRPT DATA TRANSMISSION FORMAT
  - SETS IFOV AT 1.13 KM (1.6 MR)
  - SETS SCAN RATE AT SIX LINES/SEC
- DAILY REVISIT
  - ± 58° SCAN
  - LIMITS FPA DESIGN TO ONE DETECTOR PER BAND ALONG TRACK
- SNRs BETWEEN 447 AND 667
  - FOUR DETECTORS IN TDI PER BAND
- <2% POLARIZATION SENSITIVITY
  - ELIMINATES USE OF ROTATING SCAN MIRROR – LEADS TO ROTATING TELESCOPE
- -20°, +20° FORE AND AFT VIEW

SeaWiFS BASELINE INSTRUMENT PARAMETERS

HUGHES

SANTA BARBARA RESEARCH CENTER
a subsidiary

ORBIT	705 km, DESCENDING, CALIBRATE OVER SOUTH POLE
SWATH	±58° × 1.6 mr
SCAN	CONTINUOUSLY ROTATING TELESCOPE, 6 rps, WITH CONTINUOUSLY ROTATING HALF-ANGLE MIRROR, 3 rps
DWELL TIME	42.4 μs
IFOV	1.6 × 1.6 mr
TELESCOPE	OFF-AXIS AFOCAL GREGORIAN WITH REFRACTIVE FOCUSING OPTICS BEFORE FOCAL PLANE
SPECTRAL SEPARATION	DICHROIC BEAMSPLITTERS AND NARROW-BAND FILTERS

SeaWiFS BASELINE INSTRUMENT PARAMETERS

HUGHES

SANTA BARBARA RESEARCH CENTER
a subsidiary

ON-ORBIT CALIBRATION	SOLAR DIFFUSER WITH ATTENUATOR; LUNAR SCENE
DATA RATE	1.885 Mbit/SEC
SCANNER SIZE	12 × 15 × 18 IN.
WEIGHT	91 LB
POWER	103W OPERATIONAL, 60W ORBIT AVERAGE
NUMBER OF SPECTRAL BANDS	8
NUMBER OF DETECTORS PER BAND	4 IN TDI
FOCAL PLANE ASSEMBLIES	4 (2 BANDS PER FPA) UNCOOLED SILICON PHOTODIODE ARRAYS

SeaWiFS
SEA-VIEWING, WIDE FIELD-OF-VIEW SENSOR

HUGHES

SANTA BARBARA RESEARCH CENTER
a subsidiary

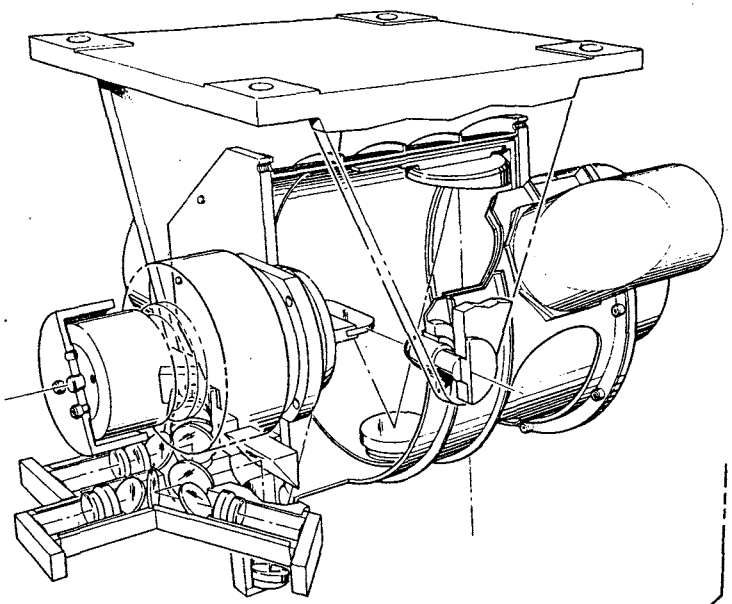

SCANNER ASSEMBLY

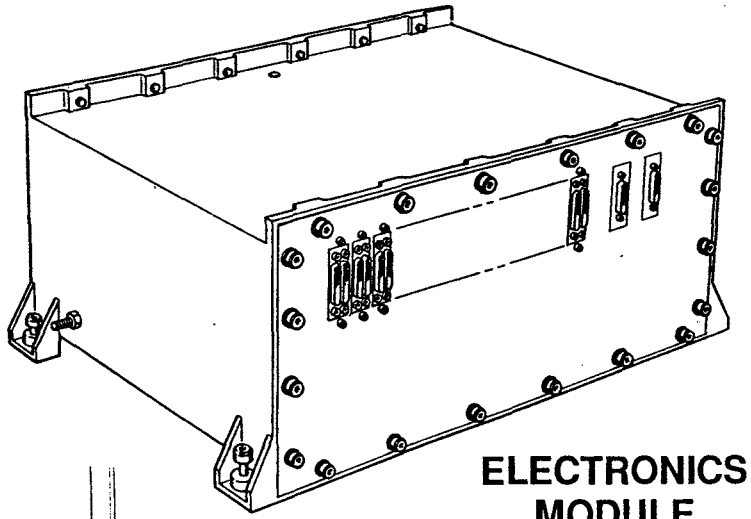

ELECTRONICS MODULE

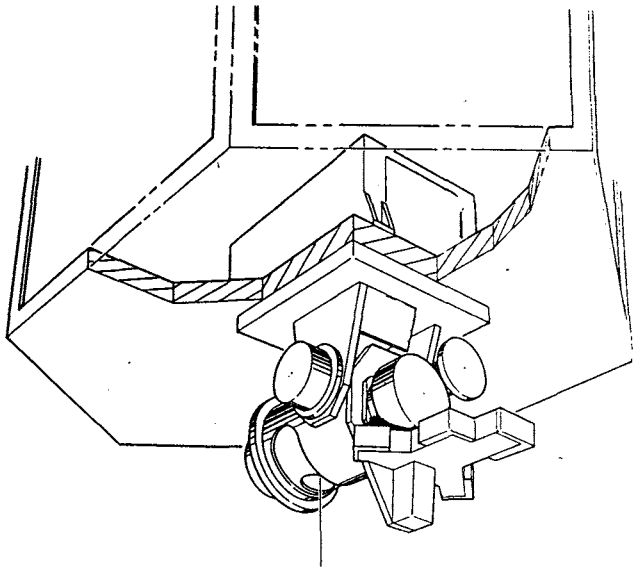

SPACECRAFT INTERFACE

7/91
91-0441-0AB

SCANNER ASSEMBLY CONCEPT

HUGHES

SANTA BARBARA RESEARCH CENTER
a subsidiary

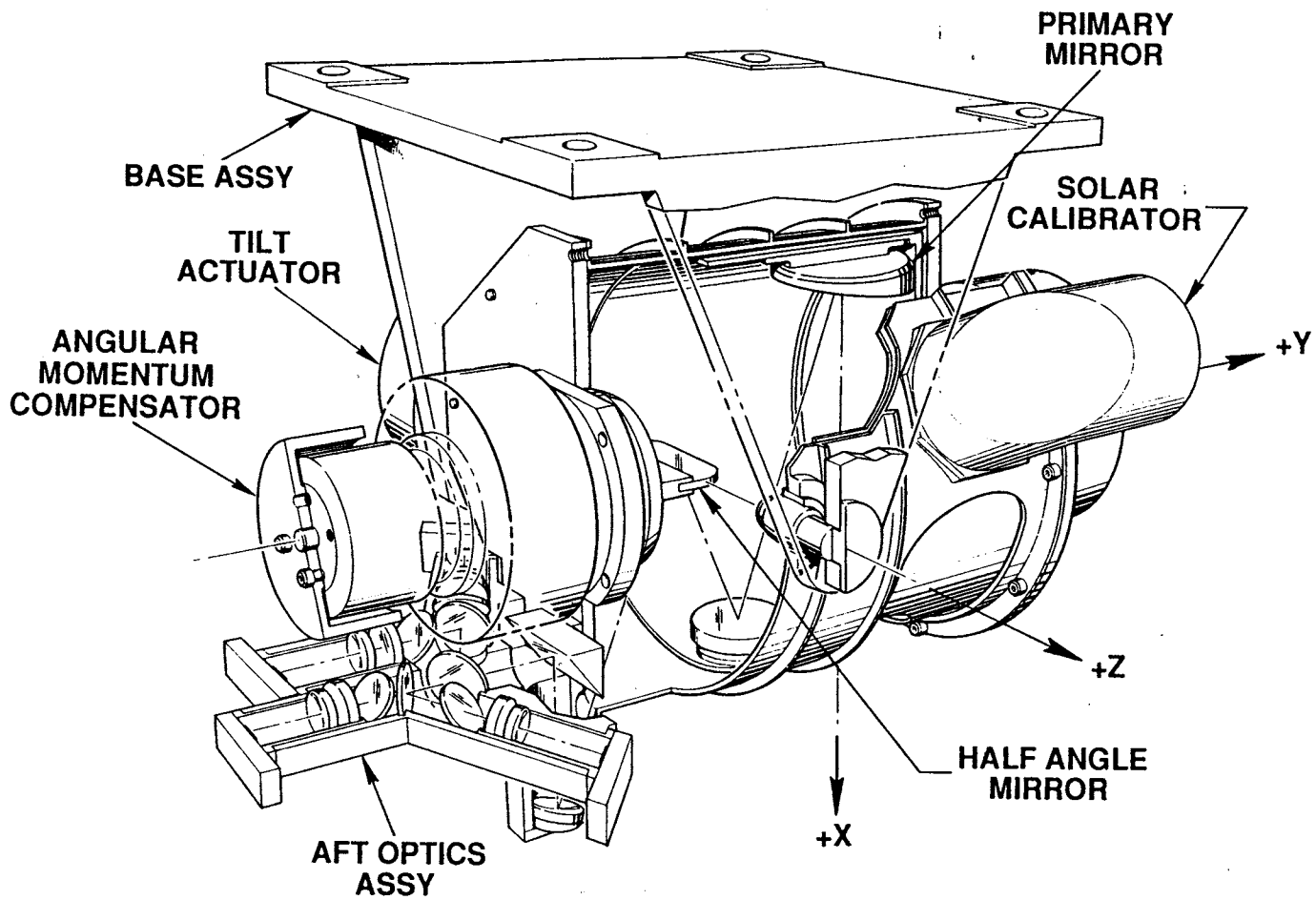

7/91
91-0441-137

INSTRUMENT CONCEPT COMPLETE

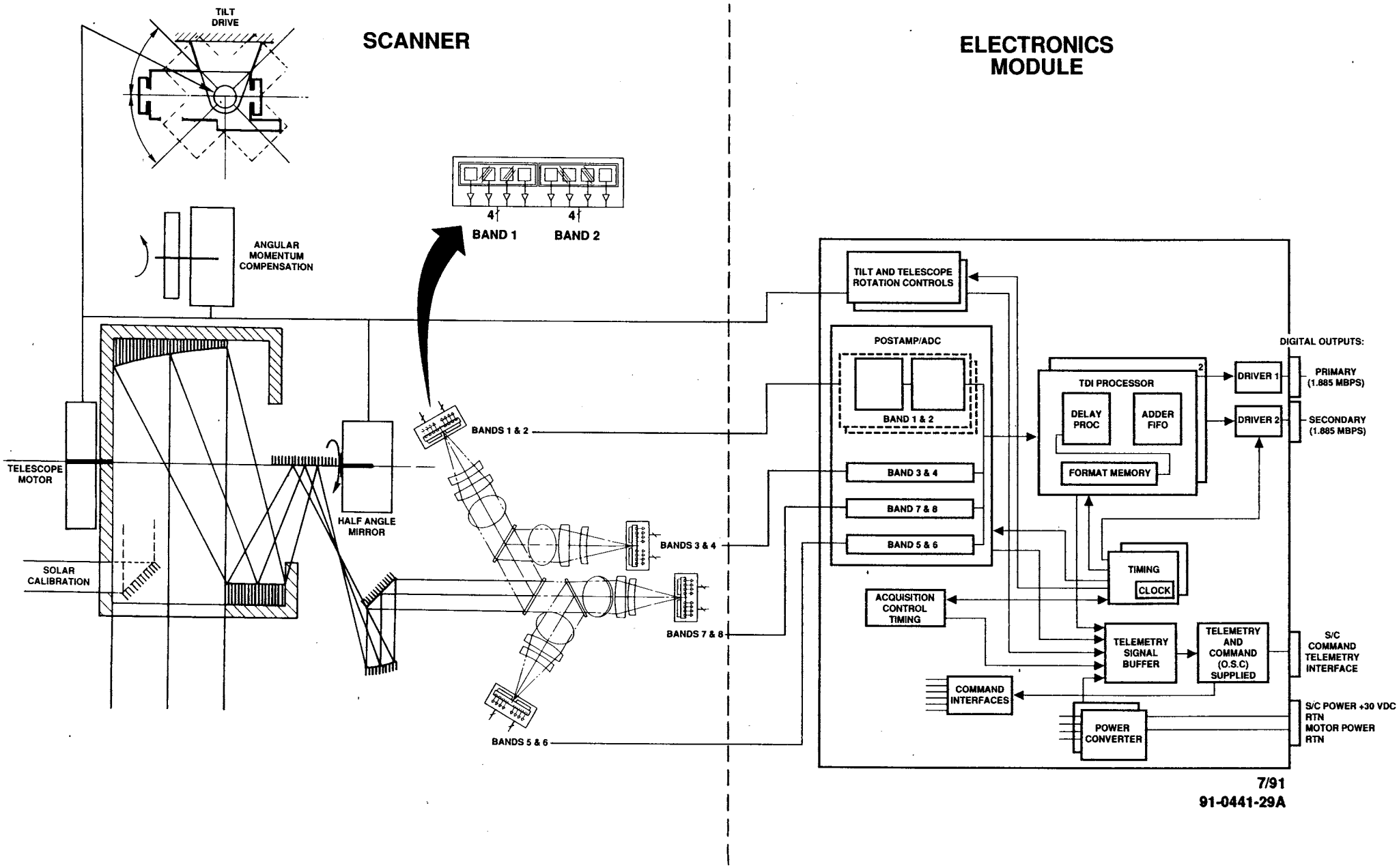

PROGRAM OBJECTIVES

HUGHES

SANTA BARBARA RESEARCH CENTER
a subsidiary

- DESIGN, BUILD, CALIBRATE, AND DELIVER THE SeaWiFS INSTRUMENT TO ORBITAL SCIENCES CORPORATION IN 24 MONTHS
- SUPPLY ORBITAL SCIENCES CORPORATION WITH ENGINEERING DEVELOPMENT UNIT (EDU) TO SUPPORT SPACECRAFT INTEGRATION

SBRC SeaWiFS ORGANIZATION

HUGHES

SANTA BARBARA RESEARCH CENTER
a subsidiary

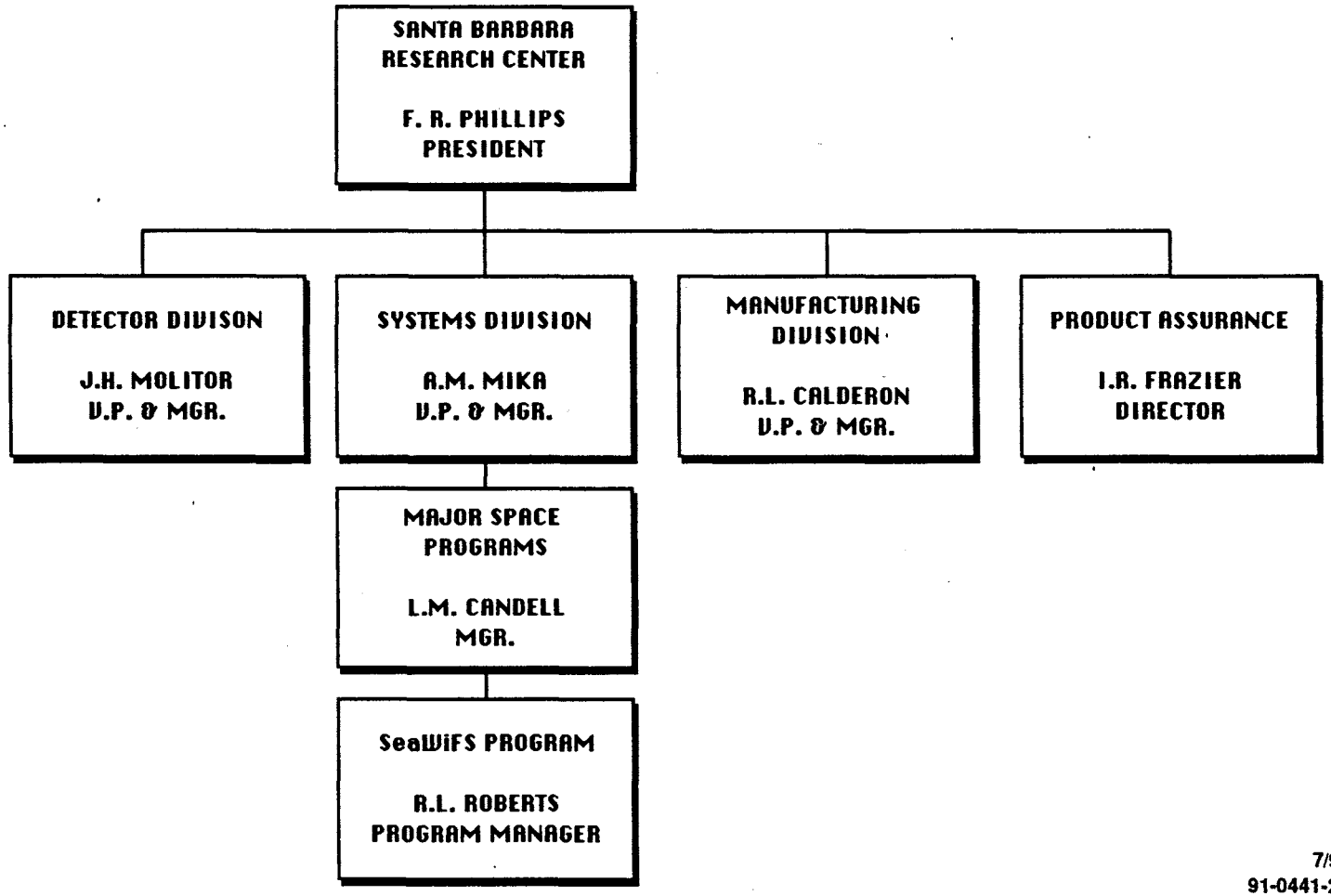

7/91
91-0441-2A

DEDICATED PROGRAM TEAM IN PLACE

HUGHES

SANTA BARBARA RESEARCH CENTER
a subsidiary

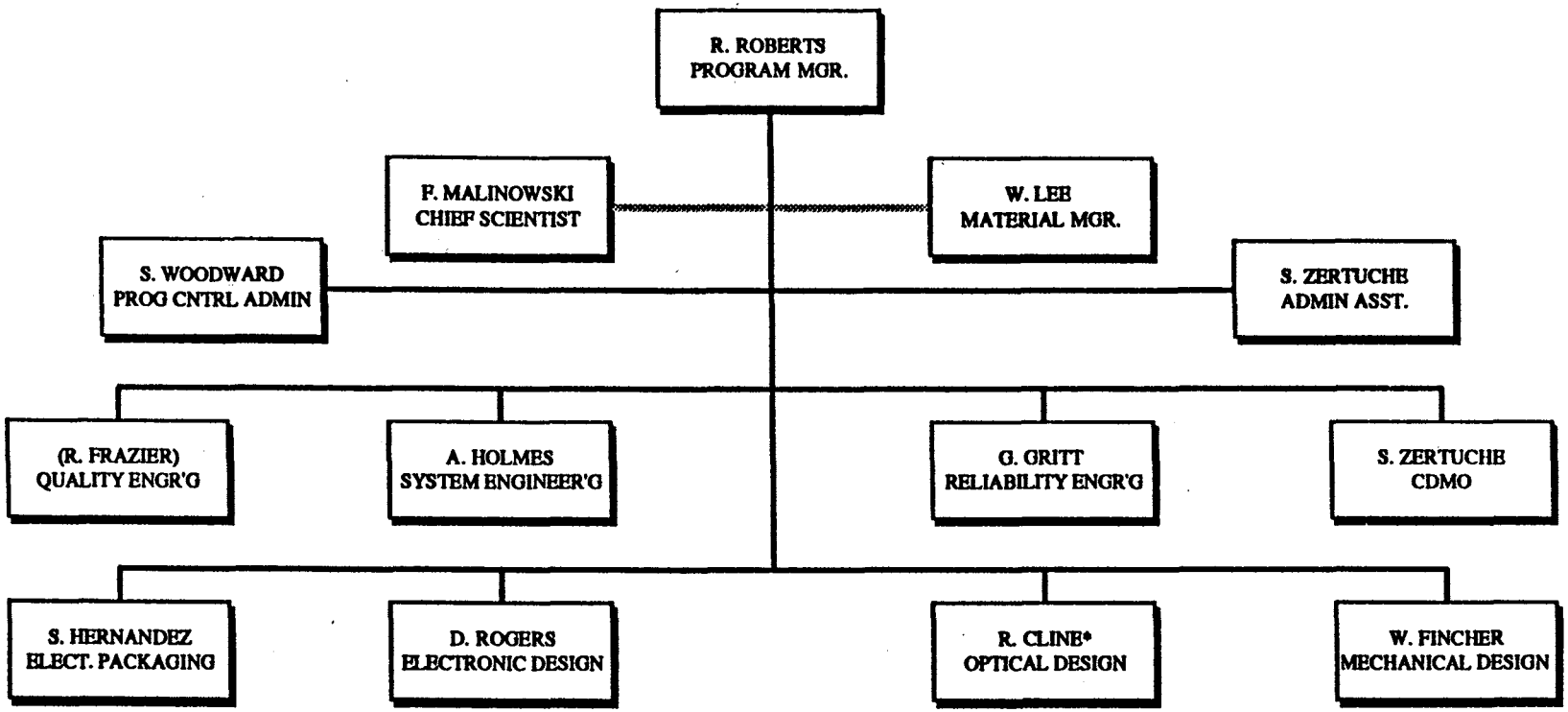

*R. CLINE ACTING
FOR G. MOORE

7/91
91-0441-3

SeaWiFS Instrument Program Schedule

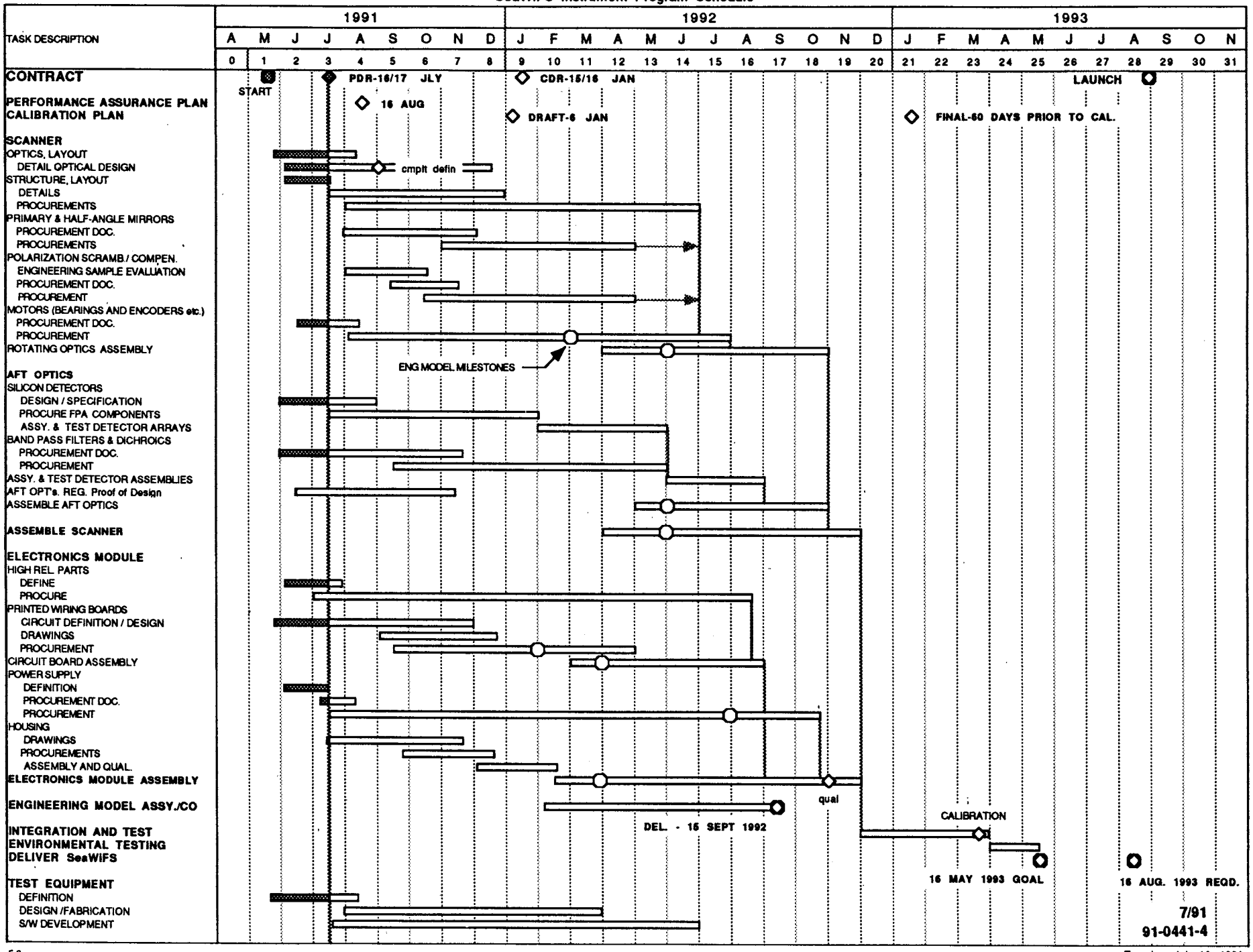

CONTRACT DELIVERABLES

HUGHES
SANTA BARBARA RESEARCH CENTER
a subsidiary

SeaWIFS Deliveries

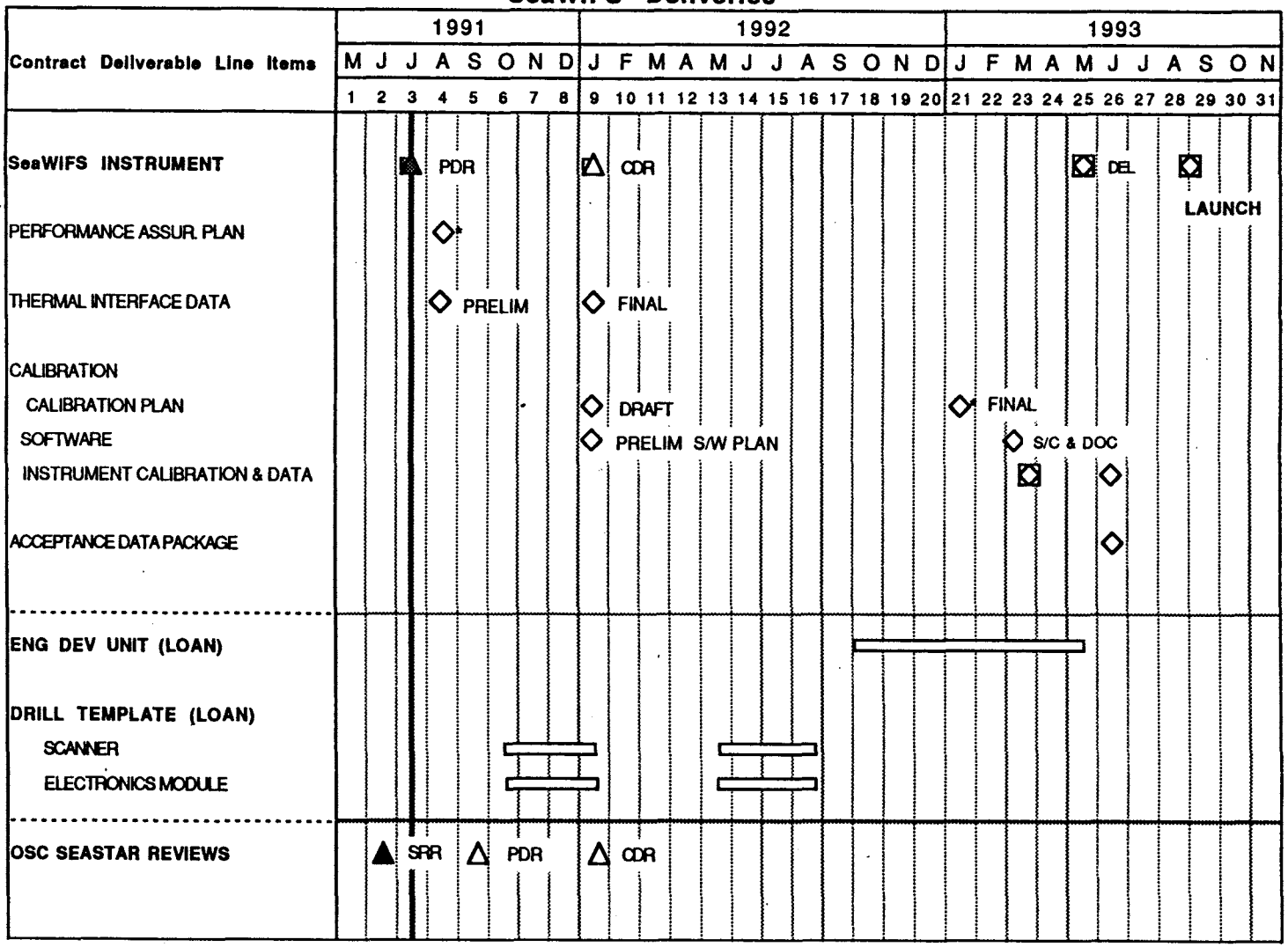

7/91
91-0441-20A

* REQUIRES GSFC APPROVAL

Tuesday, July 16, 1991

CURRENT PROGRAM STATUS

HUGHES

SANTA BARBARA RESEARCH CENTER
a subsidiary

- LETTER OF CONTRACT SIGNED MAY 16, 1991
- SYSTEM REQUIREMENTS NEARLY RESOLVED
- PROGRAM TEAM IN PLACE
- TRADE STUDIES NEARING COMPLETION
- DETAILED DESIGN PROCEEDING

SYSTEMS ENGINEERING

ALAN HOLMES

7/91
91-0441-15A

REQUIREMENTS OVERVIEW

INSTRUMENT OPTICAL REQUIREMENTS OVERVIEW

HUGHES

SANTA BARBARA RESEARCH CENTER
a subsidiary

- 8 SPECTRAL BANDS
- PIXEL SIZE OF 1.6 × 1.6 mR
- ±58.5 DEGREE FIELD OF VIEW 6 TIMES A SECOND
- 10-BIT DATA WORDS WITH SNR OF 447 TO 667
- POINTING KNOWLEDGE ACCURACY OF 0.27 mR IN-TRACK, AND 0.27 mR CROSS TRACK AT ALL SCAN POSITIONS AND ORIENTATIONS (1σ)
- <2% POLARIZATION OVER THE CENTRAL ±45° OF THE SCAN
- ±20 DEGREES FORE/AFT POINTING
- BAND TO BAND REGISTRATION 0.48 mR (1σ)

MECHANICAL REQUIREMENTS OVERVIEW

HUGHES

SANTA BARBARA RESEARCH CENTER
a subsidiary

- 5-YEAR LIFE; CONTINUOUSLY OPERATING MOTORS
- TOTAL WEIGHT LESS THAN 99 LBS
- UNCOMPENSATED ANGULAR MOMENTUM LESS THAN 1 IN.-OZ-SEC
- DYNAMICALLY BALANCED TO WITHIN ±0.5 IN.-OZ
- AT LEAST 4X TORQUE MARGIN ON ALL MOTORS
- TILT MECHANISM REQUIRED TO SELECT +20, 0 AND -20° LOOK ANGLES IN LESS THAN 13 SEC
- ALIGNMENT MIRRORS REQUIRED; SCANNER X AND Y AXIS MUST BE KNOWN TO WITHIN 0.1 mR RMS
- TELESCOPE CAN BE DRIVEN TO A STOW POSITION

ELECTRICAL REQUIREMENTS OVERVIEW

HUGHES

SANTA BARBARA RESEARCH CENTER
a subsidiary

- DIGITAL VIDEO OUTPUT: EIGHT 10-BIT WORDS PER PIXEL, 1272 PIXELS PER FRAME
- TDI (TIME DELAY INTEGRATION) REQUIRED
- SCAN MOTORS MUST BE DRIVEN WITH 0.01% SPEED ACCURACY
- INSTRUMENT MUST ACCEPT SPACECRAFT COMMAND SIGNALS AND PRODUCE TELEMETRY OUTPUTS
- INSTRUMENT MUST CONTAIN INTERNAL POWER SUPPLY TO PRODUCE OPERATING VOLTAGES
- MAXIMUM STEADY-STATE POWER (FROM SPACECRAFT BUS) LESS THAN 133W
- ORBIT AVERAGE POWER LESS THAN 67W
- 5-YEAR LIFE REQUIRED; CONSIDERABLE REDUNDANCY EXPECTED

INTERFACE REQUIREMENTS OVERVIEW

HUGHES

SANTA BARBARA RESEARCH CENTER
a subsidiary

- MECHANICAL
  - INSTRUMENT SIZE: LESS THAN 20 IN. ON A SIDE
  - CLEAR FIELDS OF VIEW REQUIRED FOR BOTH SCANNER AND EM
  - SCANNER TILT CLEARANCE REQUIRED
  - TWO ALIGNMENT MIRRORS REQUIRED
  - DRILL PLATE FOR SCANNER AND EM MUST BE PROVIDED
  - ACCESS REQUIRED (CONNECTORS, PURGE PORT, REFERENCE ALIGN. MIRRORS)
  - CENTER OF MASS AND MOMENT OF INERTIA MUST BE DETERMINED
- THERMAL
  - THERMALLY ISOLATED FROM SPACECRAFT
  - INSTRUMENT CONTAINS TEMPERATURE CONTROL (HEATERS, RADIATION TO SPACE)
  - OPERATING RANGE: SCANNER, 0 TO 35°C; EM, O TO 45°C
  - NONOPERATING RANGE: SCANNER, -30 TO +50°C; EM, -30 TO +50°C
  - THERMAL INTERFACE DATA REQUIRED

INTERFACE REQUIREMENTS OVERVIEW (CONT)

HUGHES

SANTA BARBARA RESEARCH CENTER
a subsidiary

- OPTICAL
  - CORRECT SCANNER ORIENTATION
  - CLEAR FIELDS OF VIEW
- ELECTRICAL
  - SPACECRAFT POWER REQUIREMENTS:
    - 36 ± 0.6V, 0 TO 3.1A PRIMARY (REGULATED)
    - 30 ± 2.0V, 0 TO 0.77A MOTOR
    - 28 ± 4.0V, 0 TO 1.1A HEATERS
    - 28 ± 4.0V, 0 TO TBD A STOW
  - NOT DAMAGED BY 0 TO 40 (TBR) V POWER RANGE
  - TRANSIENT SUPPRESSION REQUIRED
  - SINGLE-POINT GROUND
  - SPECIFIED SIGNAL CHARACTERISTICS
    - COMMAND
    - TELEMETRY
    - VIDEO DATA
    - RELAYS

ENGINEERING DEVELOPMENT UNIT WILL MIMIC KEY ELEMENTS OF SeaWiFS

HUGHES

SANTA BARBARA RESEARCH CENTER
a subsidiary

- MOUNT ON SPACECRAFT – NO OTHER CONSTRAINTS ON STRUCTURE
- SCANNER
  - FUNCTIONING TELESCOPE ASSEMBLY
    - ROTATING TELESCOPE AND HALF-ANGLE MIRROR ASSEMBLIES
  - 2 OF 8 OPTICAL BANDS FUNCTIONING
    - 4 OF 4 DETECTORS AND PREAMPS PER CHANNEL WORKING
  - FUNCTIONING TILT MECHANISM
- ELECTRONICS MODULE
  - 2 OF 8 VIDEO CHANNEL FUNCTIONING INCLUDING TDI
- SERVO CONTROL ELECTRONICS FOR ROTATING TELESCOPE AND TILT MECHANISM

DESIGN TRADEOFFS

7/91
91-0441-21A

A SCANNING TELESCOPE PROVIDES SUPERIOR OPTICAL PERFORMANCE

HUGHES

SANTA BARBARA RESEARCH CENTER
a subsidiary

- METHOD OF SCAN

SCANNING TELESCOPE

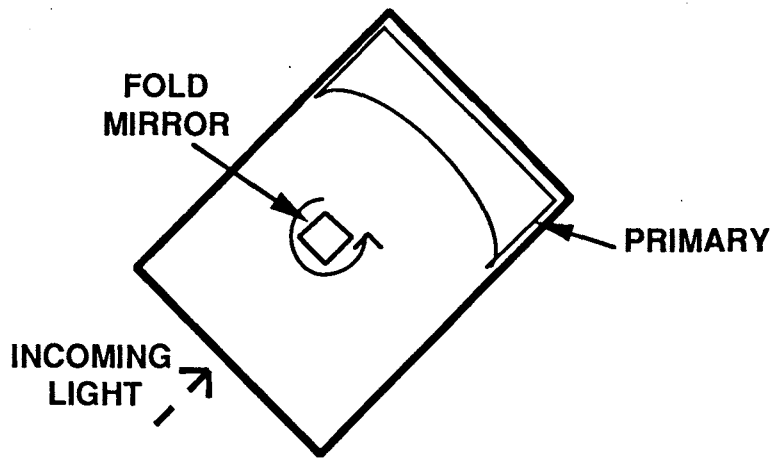

SCAN MIRROR

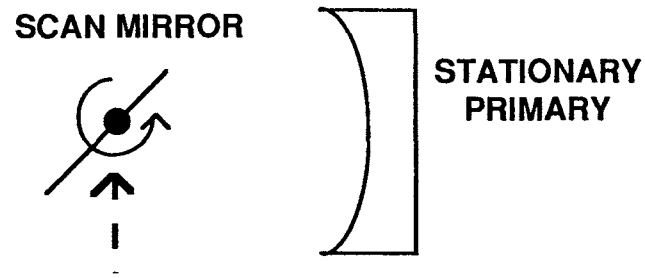

THE SCANNING TELESCOPE HAS:

- LOWER POLARIZATION SENSITIVITY
- LESS STRAY LIGHT
- LESS EXTREME MIRROR ANGLES
- SMALLER MIRRORS

BUT IT HAS HEAVIER SPINNING COMPONENTS

7/91
91-0441-22ABC

SCANNING TELESCOPE REDUCES POLARIZATION AND STRAY LIGHT EFFECTS

HUGHES

SANTA BARBARA RESEARCH CENTER
a subsidiary

• SeaWiFS CONCEPT

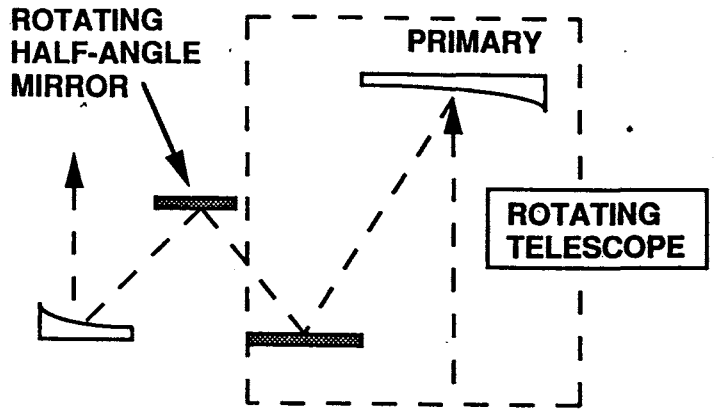

- ROTATING TELESCOPE AND UNOBSCURED PRIMARY HAS LOWEST STRAY LIGHT
- NONROTATING IMAGE
- TDI POSSIBLE
- LOW POLARIZATION EFFECT

• CZCS-TYPE CONCEPT

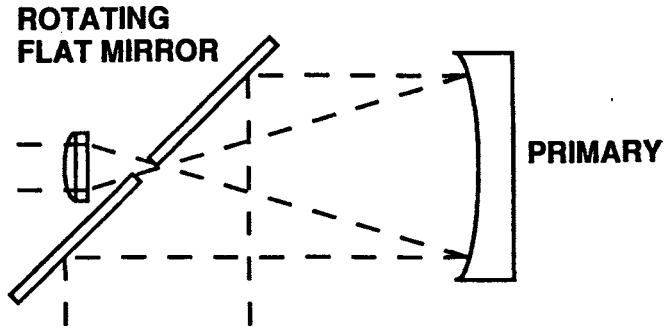

- LARGER APERTURE POSSIBLE, ELIMINATING NEED FOR TDI
- FLAT MIRROR VIEWS ENTIRE SCENE, INCREASING STRAY LIGHT
- ONLY 45° MIRROR NEED BE TILTED ±10°, NOT ENTIRE TELESCOPE
- MUCH LIGHTER SPINNING PARTS
- NO DEROTATOR NECESSARY
- ONLY ONE OPTICAL SET OF SURFACES (NO DOUBLE-SIDED MIRROR)
- INITIAL 45° FLAT MIRROR INTRODUCES UNACCEPTABLE POLARIZATION

7/91
91-0441-25AA

DICHROICS AND FILTERS PROVIDE COMPACT SPECTRAL SEPARATION

HUGHES

SANTA BARBARA RESEARCH CENTER
a subsidiary

- SPECTRAL BAND SEPARATION
  - DICHROICS AND FILTERS
    - MORE COMPACT DESIGN
    - SIMPLER CONFIGURATION
    - BETTER THROUGHPUT
    - LESS POLARIZATION EFFECT
    - POLARIZATION COMPENSATION IS EASIER
  - GRATING
    - GREATER LONG TERM STABILITY
    - EASIER TO OBTAIN BAND 7 NOTCH
    - PREFERRED TECHNIQUE IF MANY MORE SPECTRAL BANDS REQUIRED

POLARIZATION COMPENSATION IS A PROVEN TECHNIQUE, BUT POLARIZATION SCRAMBLING SIMPLIFIES SYSTEM

HUGHES

SANTA BARBARA RESEARCH CENTER
a subsidiary

POLARIZATION COMPENSATION

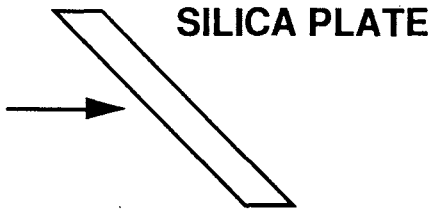

- SIMPLE, PROVEN TECHNIQUE
- WAVELENGTH VARIATION IN POLARIZATION EFFECT REQUIRES A COMPENSATOR FOR EACH BAND PAIR
- CAN NOT COMPENSATE FOR CHANGES IN POLARIZATION EFFECT AFTER FINAL ASSEMBLY
- DOES NOT DEGRADE IMAGE

POLARIZATION SCRAMBLING

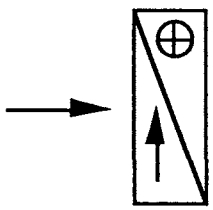

- ONE POLARIZATION SCRAMBLER CAN REPLACE ALL FOUR COMPENSATORS
- MUST BE UP FRONT IN SYSTEM, BEFORE ANY COMPONENTS WITH VARIABLE REFLECTIVITY WITH POLARIZATION
- ADDS AROUND 0.1 PIXEL IMAGE BLUR
- ELIMINATES ITERATIVE SELECTION OF POLARIZATION COMPENSATORS
- ELIMINATES TEMPORAL POLARIZATION VARIATIONS

SOLAR DIFFUSER AND HALF-ANGLE MIRROR CHOSEN OVER ALTERNATIVE TECHNIQUES

HUGHES

SANTA BARBARA RESEARCH CENTER
a subsidiary

- INFLIGHT CALIBRATION
  - SOLAR DIFFUSER
    - DESIRABLE SPECTRAL DISTRIBUTION
    - STABLE SOURCE IF SOLAR EXPOSURE MINIMIZED
    - REQUIRES NO POWER
    - BLUE STABILITY VERY GOOD
    - DIFFUSER CAN BE PROTECTED BY BAFFLE
  - TUNGSTEN FILAMENT INCANDESCENT LAMP
    - CALIBRATION CAN BE PERFORMED AT ANY TIME
    - DOES NOT SUFFER DEGRADATION DUE TO SOLAR EXPOSURE
- DEROTATION TECHNIQUE
  - HALF-ANGLE MIRROR
    - SIMPLE, MORE COMPACT
    - WIDE SPECTRAL RANGE
  - DOVE PRISM OR K-MIRROR
    - LESS CRITICAL MECHANISM REQUIREMENT
    - LESS POLARIZATION EFFECT
    - TWO DOVES IN A ROW WOULD ELIMINATE MOMENTUM COMPENSATOR
    - REQUIRES GREATER OPTICAL PATH; PUPIL LOCATION IS NOT OPTIMUM

ELECTRONIC DESIGN CHOICES SELECTED TO MINIMIZE COMPLEXITY

HUGHES

SANTA BARBARA RESEARCH CENTER
a subsidiary

- DISCRETE LOGIC CHOSEN INSTEAD OF A DIGITAL SIGNAL PROCESSOR (DSP) AND μP FOR TDI PROCESSOR
  - ELIMINATES SOFTWARE DESIGN TASK
  - ELIMINATES DSP, μP AND MEMORY PROCUREMENTS
  - ELIMINATES AT LEAST ONE PWB DESIGN AND ASSOCIATED CIRCUIT CARD ASSEMBLY (CCA)
  - REDUCES POWER CONSUMPTION
- 2:1 VERSUS 4:1 TDI (4:1 CHOSEN)
  - HAD POTENTIAL TO REDUCE ANALOG POWER BY ~30%
  - COULD HAVE ELIMINATED HALF THE PREAMPS AND 2 POSTAMP CCAs
  - UNABLE TO GUARANTEE W/C SNR WITH 2:1, NO REDUNDANCY

ELECTRONIC DESIGN CHOICES SELECTED TO MINIMIZE COMPLEXITY

HUGHES

SANTA BARBARA RESEARCH CENTER
a subsidiary

- REPLACE SOLAR CALIBRATOR DOOR WITH FIXED DIFFUSER PLATE AND BAFFLES TO LIMIT SOLAR EXPOSURE
  - ELIMINATES MECHANISM AND ASSOCIATED DRIVER CCA
- CONNECT EXTERNAL CONNECTORS DIRECTLY TO CCAs
  - SIMPLIFIES INTERNAL WIRE HARNESS ASSEMBLY BY ELIMINATING ELECTRONICS MODULE SIGNALS GOING TO SCANNER AND TO SPACECRAFT

BASELINE SENSOR DESIGN

7/91
91-0441-26AB

INSTRUMENT CONCEPT COMPLETE

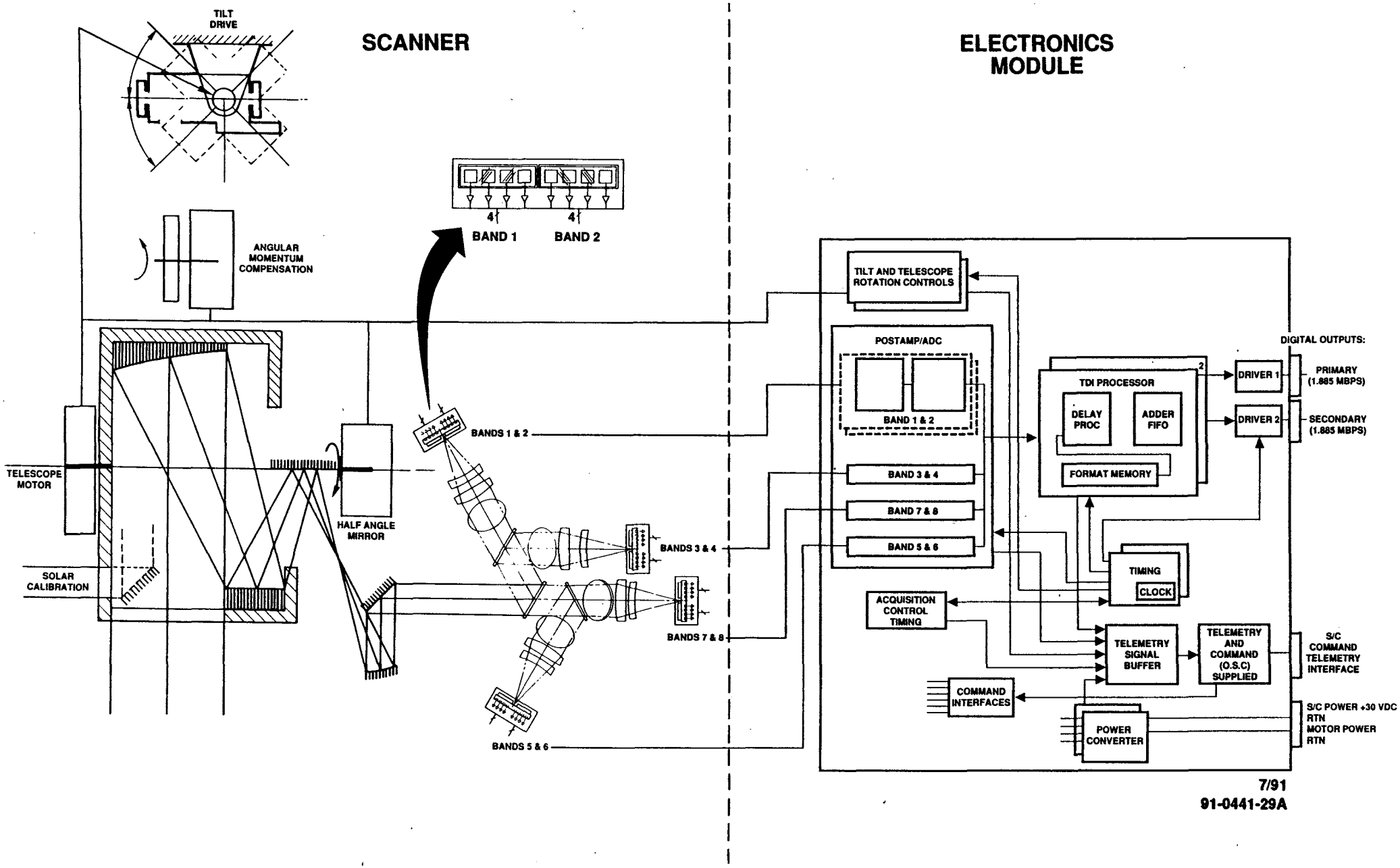

SeaWiFS BASELINE INSTRUMENT PARAMETERS

HUGHES

SANTA BARBARA RESEARCH CENTER
a subsidiary

ORBIT	705 km, DESCENDING, CALIBRATE OVER SOUTH POLE
SWATH	$\pm 58° \times 1.6$ mr
SCAN	CONTINUOUSLY ROTATING TELESCOPE, 6 rps, WITH CONTINUOUSLY ROTATING HALF-ANGLE MIRROR, 3 rps
DWELL TIME	42.4 μs
IFOV	1.6×1.6 mr
TELESCOPE	OFF-AXIS AFOCAL GREGORIAN WITH REFRACTIVE FOCUSING OPTICS BEFORE FOCAL PLANE
SPECTRAL SEPARATION	DICHROIC BEAMSPLITTERS AND NARROW-BAND FILTERS

SeaWiFS BASELINE INSTRUMENT PARAMETERS

HUGHES

SANTA BARBARA RESEARCH CENTER
a subsidiary

ON-ORBIT CALIBRATION	SOLAR DIFFUSER WITH ATTENUATOR; LUNAR SCENE
DATA RATE	1.885 Mbit/SEC
SCANNER SIZE	12 × 15 × 18 IN.
WEIGHT	91 LB
POWER	103W OPERATIONAL, 60W ORBIT AVERAGE
NUMBER OF SPECTRAL BANDS	8
NUMBER OF DETECTORS PER BAND	4 IN TDI
FOCAL PLANE ASSEMBLIES	4 (2 BANDS PER FPA) UNCOOLED SILICON PHOTODIODE ARRAYS

SCANNER ASSEMBLY CONCEPT

HUGHES

SANTA BARBARA RESEARCH CENTER
a subsidiary

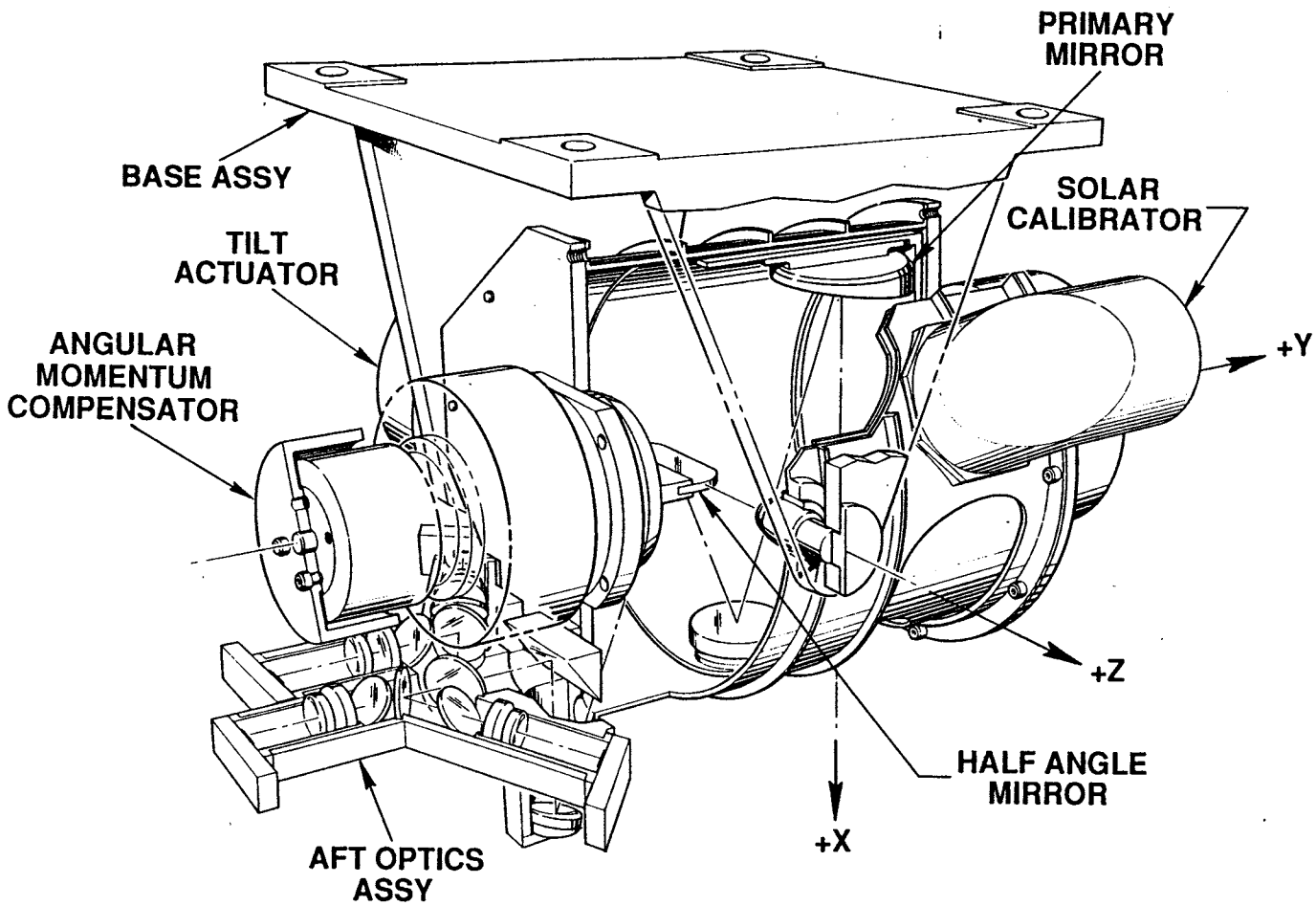

7/91
91-0441-137

COORDINATE SYSTEM

HUGHES

SANTA BARBARA RESEARCH CENTER
a subsidiary

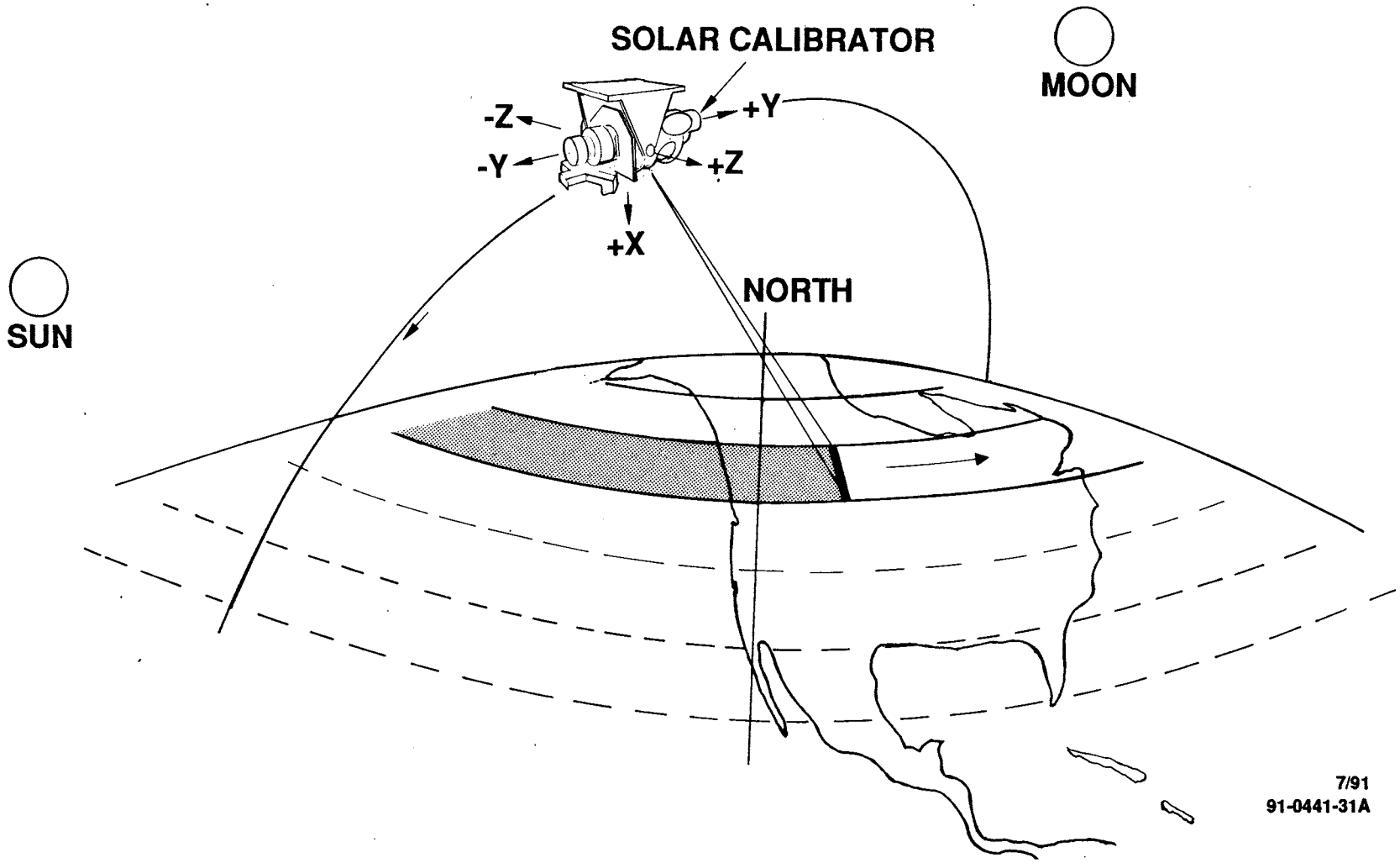

7/91
91-0441-31A

BASELINE OPTICAL DESIGN IS APPROACHING MATURITY

HUGHES

SANTA BARBARA RESEARCH CENTER
a subsidiary

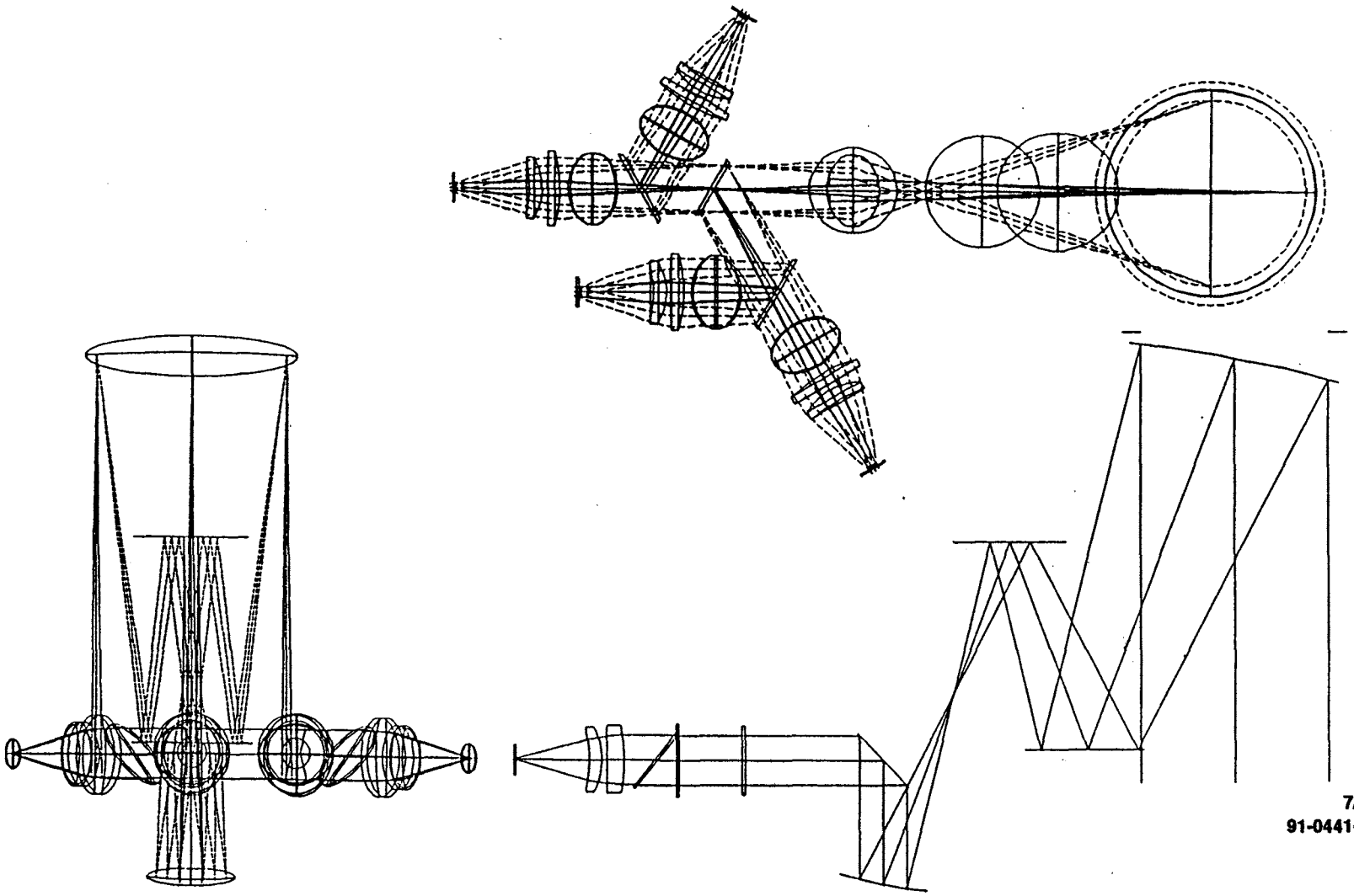

7/91
91-0441-32

AFT OPTICS GEOMETRY

HUGHES

SANTA BARBARA RESEARCH CENTER
a subsidiary

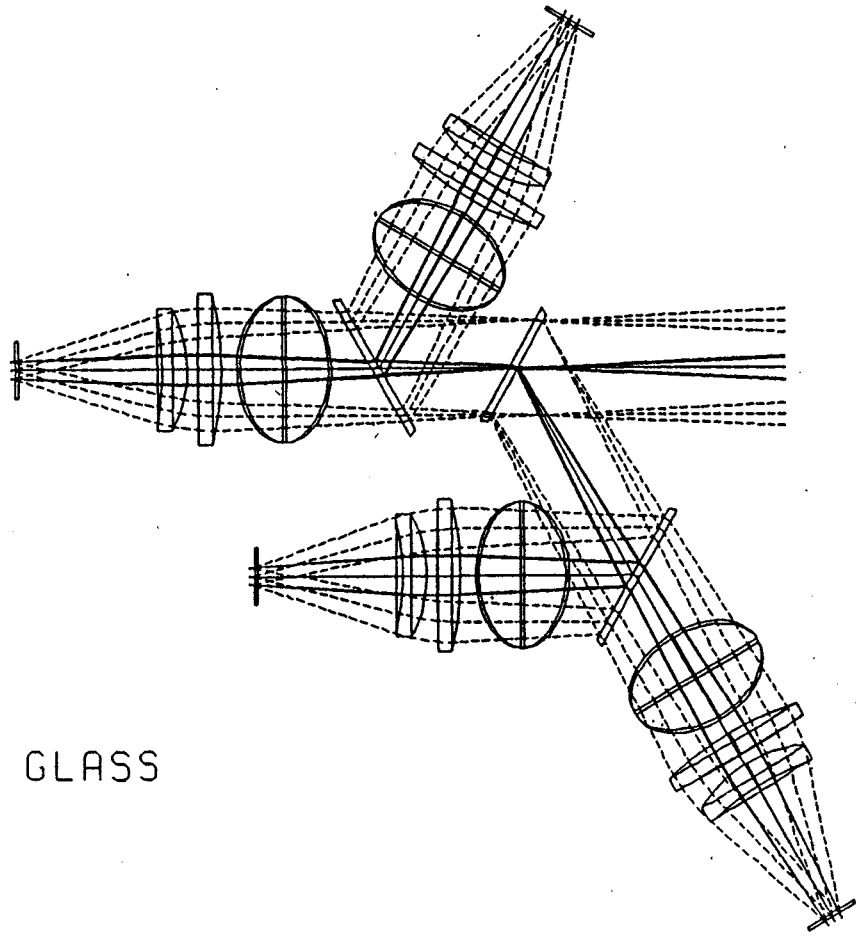

RELAY WITH SF52 GLASS

1.25 IN

7/91
91-0441-33

DETECTOR ARRAY CONFIGURATION CAN BE READILY FABRICATED

HUGHES

SANTA BARBARA RESEARCH CENTER
a subsidiary

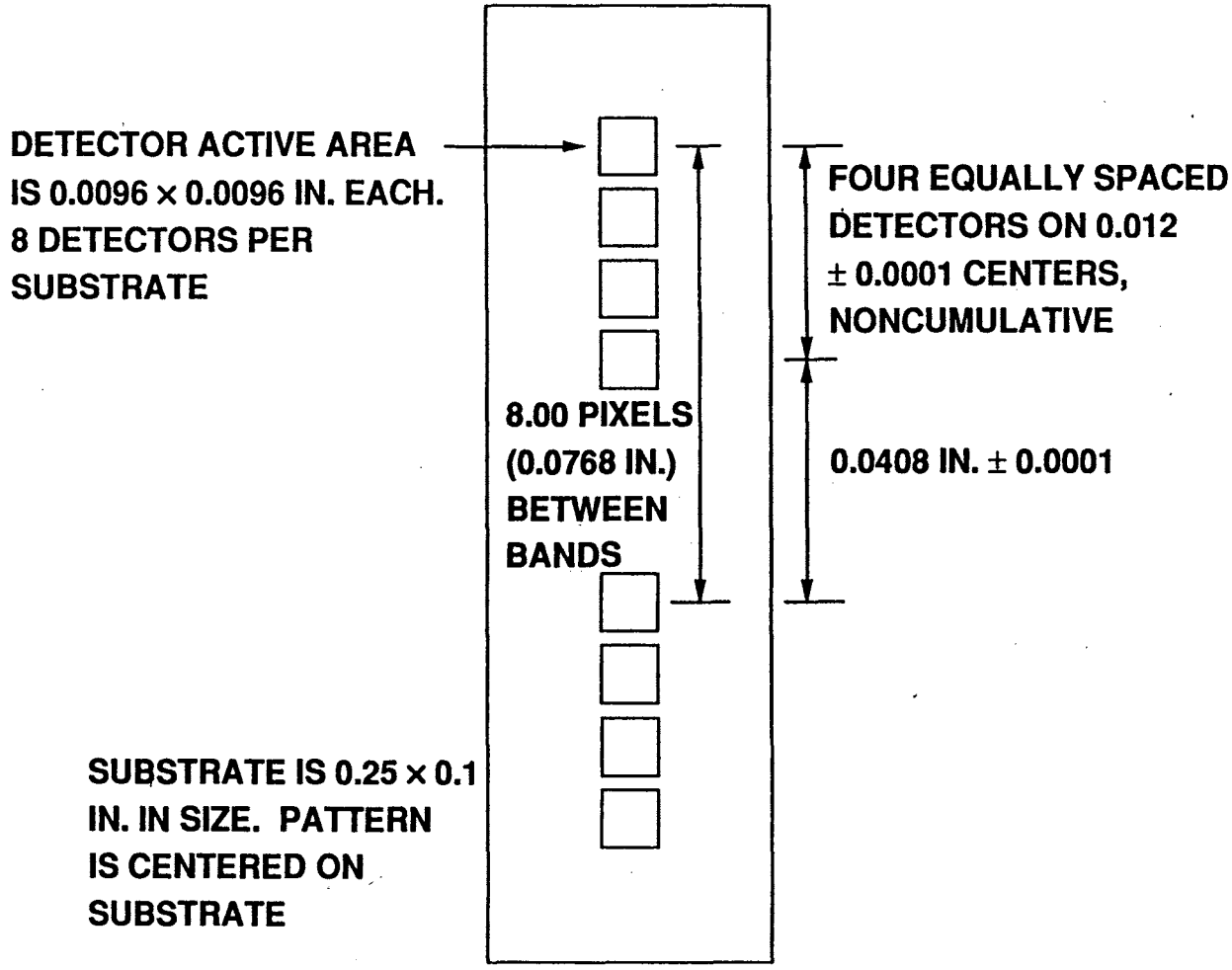

7/91
91-0441-34A

PRELIMINARY DETECTOR AND FILTER MOUNTING CONCEPT MINIMIZES STRAY LIGHT

HUGHES

SANTA BARBARA RESEARCH CENTER
a subsidiary

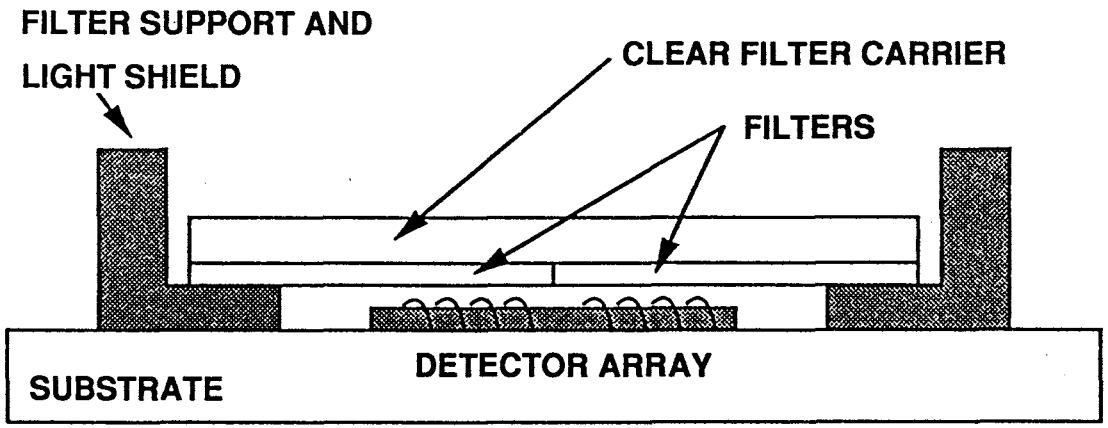

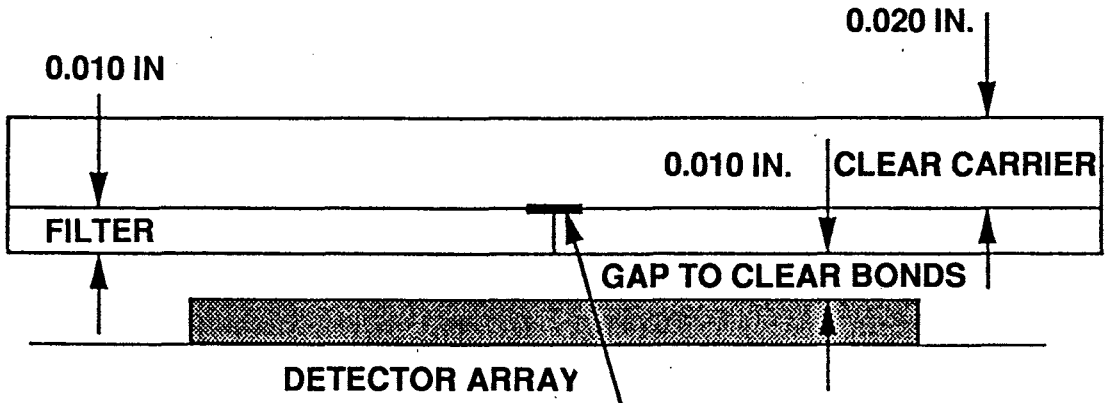

METALLIZATION ON CARRIER WHICH BLOCKS LIGHT FROM JOINT AND PROVIDES FILTER ALIGNMENT FIDUCIAL

7/91
91-0441-34AA

FOCAL PLANE CONCEPTS MINIMIZE COHERENT NOISE

HUGHES

SANTA BARBARA RESEARCH CENTER
a subsidiary

OPTION A: CLOSES TIA FEEDBACK LOOP WITHIN PACKAGE

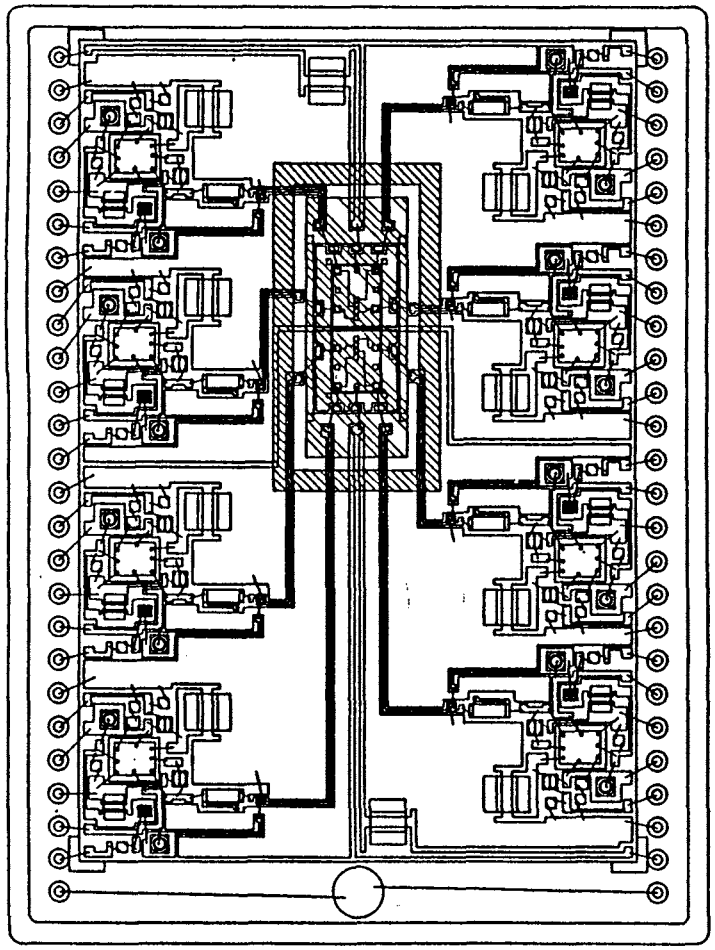

OPTION B: DETECTORS, FETs, AND LOAD RESISTORS ONLY

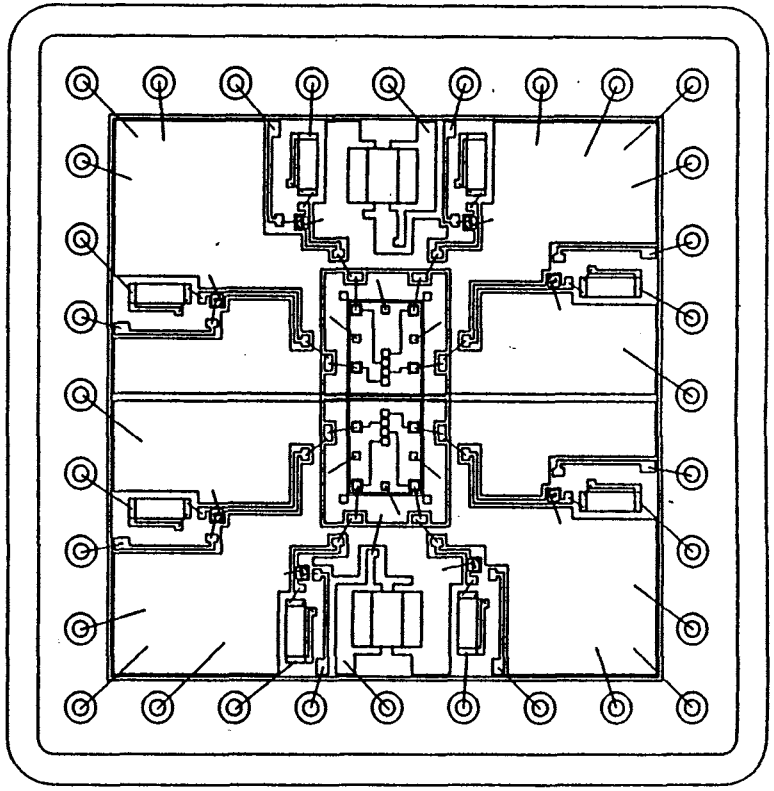

7/91
91-0441-35

SOLAR CALIBRATOR CONCEPT PROTECTS DIFFUSER FROM ENVIRONMENT

HUGHES

SANTA BARBARA RESEARCH CENTER
a subsidiary

- ±11 DEGREE FOV
- 10% TRANSMISSION
- ±0.14% UNIFORMITY OVER 3-INCH APERTURE

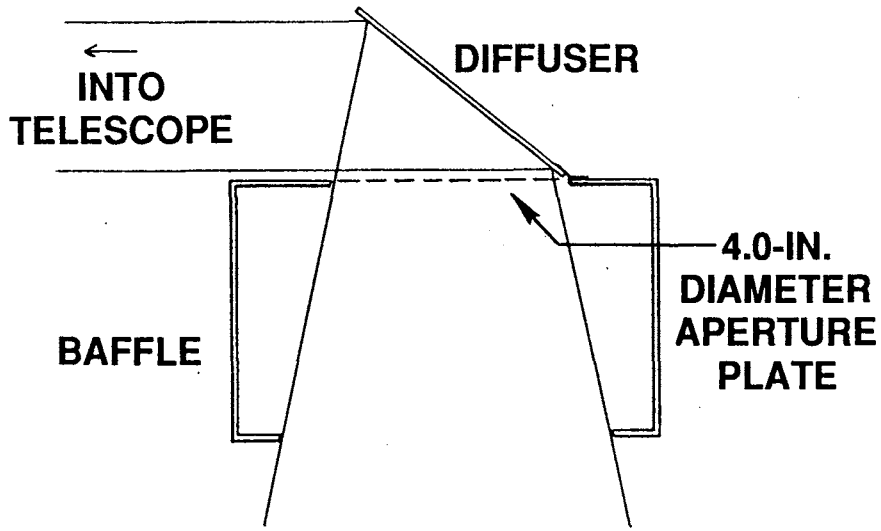

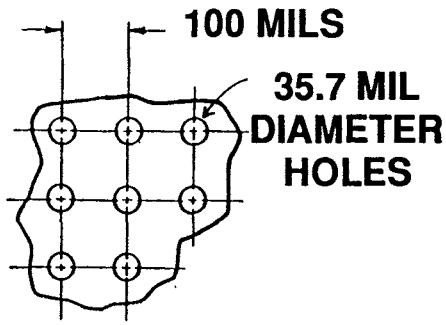

NOTE: COMBINATION OF APERTURE MASK AND EXTERNAL BAFFLE REDUCE DIFFUSER EXPOSURE OVER 5 YEARS TO ONLY 20 DAYS.

SOLAR AND LUNAR CALIBRATION POINTS

HUGHES

SANTA BARBARA RESEARCH CENTER
a subsidiary

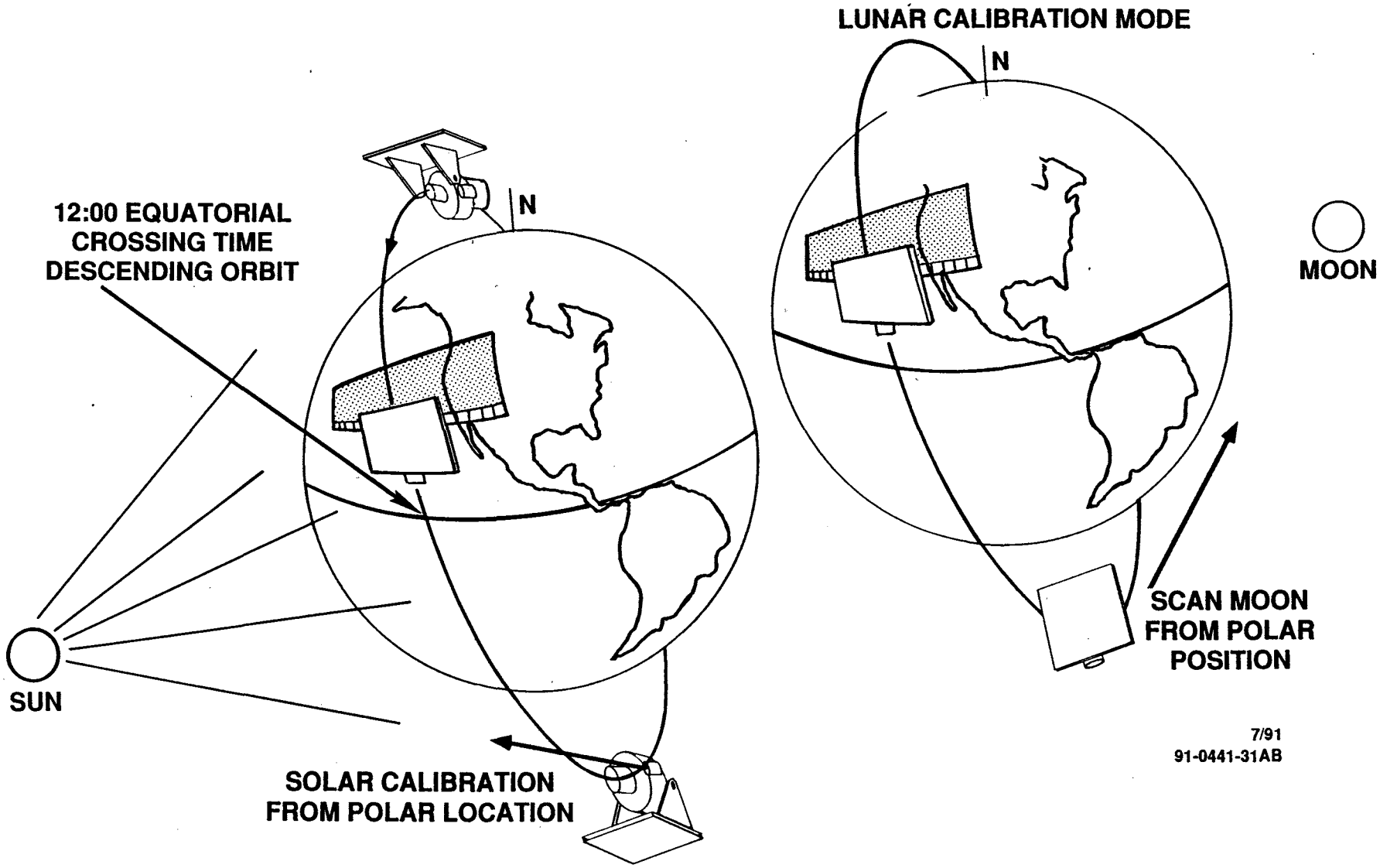

7/91
91-0441-31AB

LAUNCH TIME HAS LARGE EFFECT ON SOLAR CALIBRATOR ANGLE

HUGHES

SANTA BARBARA RESEARCH CENTER
a subsidiary

SOUTH POLE -- NOON EQUATOR CROSSING

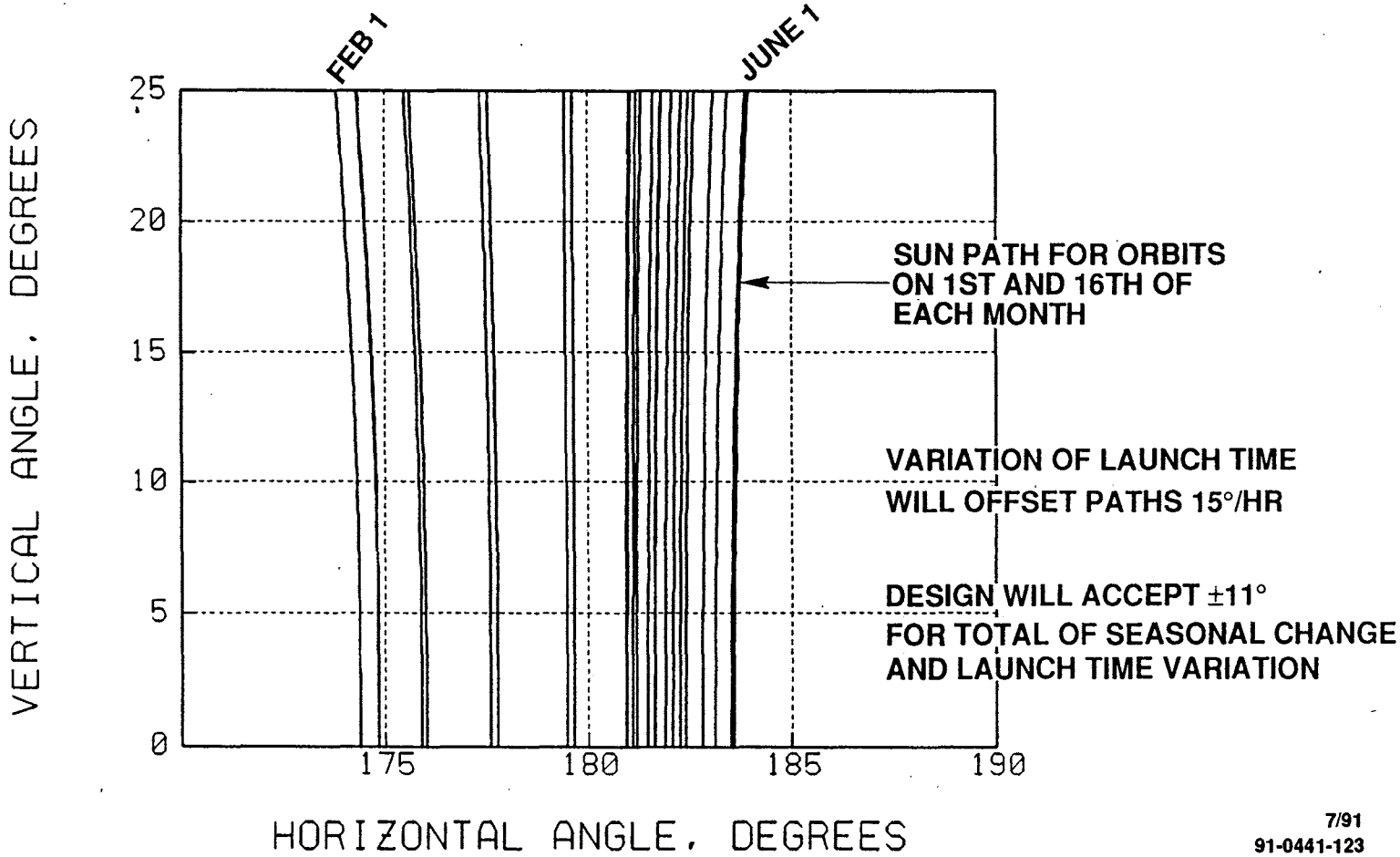

7/91
91-0441-123

SeaWiFS INSTRUMENT POWER – PRESENT ESTIMATES

HUGHES

SANTA BARBARA RESEARCH CENTER
a subsidiary

SUBSYSTEM	SUNLIGHT (W)	ECLIPSE (W)	ORBIT AVERAGE (W)
SCANNER	23	15	18.2
SCANNER HEATER*	0	0	0
ELEC. MODULE	64	25	40.6
EM HEATER*	0	0	0
TOTALS	87	40	58.8
*TOTAL HEATER POWER OF 30W MAY NOT BE REQUIRED.			

SCANNER TILT OPERATION REQUIRES 16W.

7/91
91-0441-21

OVERALL INSTRUMENT WEIGHT IS WITHIN BUDGET

HUGHES

SANTA BARBARA RESEARCH CENTER
a subsidiary

SUBSYSTEM	CURRENT ESTIMATE (LBS)	NOT-TO-EXCEED (LBS)
SCANNER	43.1	44
ELECTRONICS MODULE	42.0	50
INTERCONNECT CABLING	5.9	5
TOTALS	91.0	99

CURRENT MARGIN IS 8.0 LBS

RADIOMETRIC SENSITIVITY SPECIFICATION (GAIN = 1)

HUGHES

SANTA BARBARA RESEARCH CENTER
a subsidiary

BAND	λ_{CENTER} (NM)	MAX RADIANCE ($MW/CM^2/\mu M/STER$)	SENSITIVITY ($\mu W/CM^2/\mu M/STER/BIT$)
1	412	13.63	13.323
2	443	13.25	12.952
3	490	10.50	10.264
4	520	8.75	8.553
5	565	7.25	7.087
6	665	4.25	4.154
7	765	3.00	2.932
8	865	2.13	2.082

CURRENT SELECTABLE GAIN ESTIMATES

HUGHES

SANTA BARBARA RESEARCH CENTER
a subsidiary

BAND	GAIN 1	GAIN 2	SOLAR*	LUNAR**
1	× 1	× 2	× 1.95	× 2.05
2	× 1	× 2	× 1.75	× 1.60
3	× 1	× 2	× 1.35	× 1.10
4	× 1	× 2	× 1.20	× 0.90
5	× 1	× 2	× 1.05	× 0.70
6	× 1	× 2	× 0.70	× 0.35
7	× 1	× 2	× 0.60	× 0.25
8	× 1	× 2	× 0.55	× 0.20

* APERTURE MASK PROVIDES ADDITIONAL 10X ATTENUATION.

**SBRC ESTIMATES. CLARIFICATION NEEDED TO DEFINE PEAK LUNAR REFLECTIVITY VALUES BY 1 AUG 91

MINIMUM SNR ($L_{TYPICAL}$) PREDICTION EXCEEDS REQUIREMENTS SUBSTANTIALLY

HUGHES

SANTA BARBARA RESEARCH CENTER
a subsidiary

BAND	λ_{CENTER}	MINIMUM SNR* PREDICTION	SPEC. MIN SNR
1	412	743	499
2	443	789	674
3	490	861	667
4	520	812	616
5	565	752	581
6	665	613	447
7	765	577	455
8	865	555	467

* ASSUMES PREAMP NOISE 25% GREATER THAN RESISTOR NOISE, 20% REDUCTION OF OPTICAL THROUGHPUT, AND 10% RESPONSIVITY LOSS.

7/91
91-0441-22

DETECTOR ARRAY QUANTUM EFFICIENCY EXPERIENCE WITH PREVIOUS PROGRAMS

HUGHES

SANTA BARBARA RESEARCH CENTER
a subsidiary

Visible Detector Quantum Efficiency

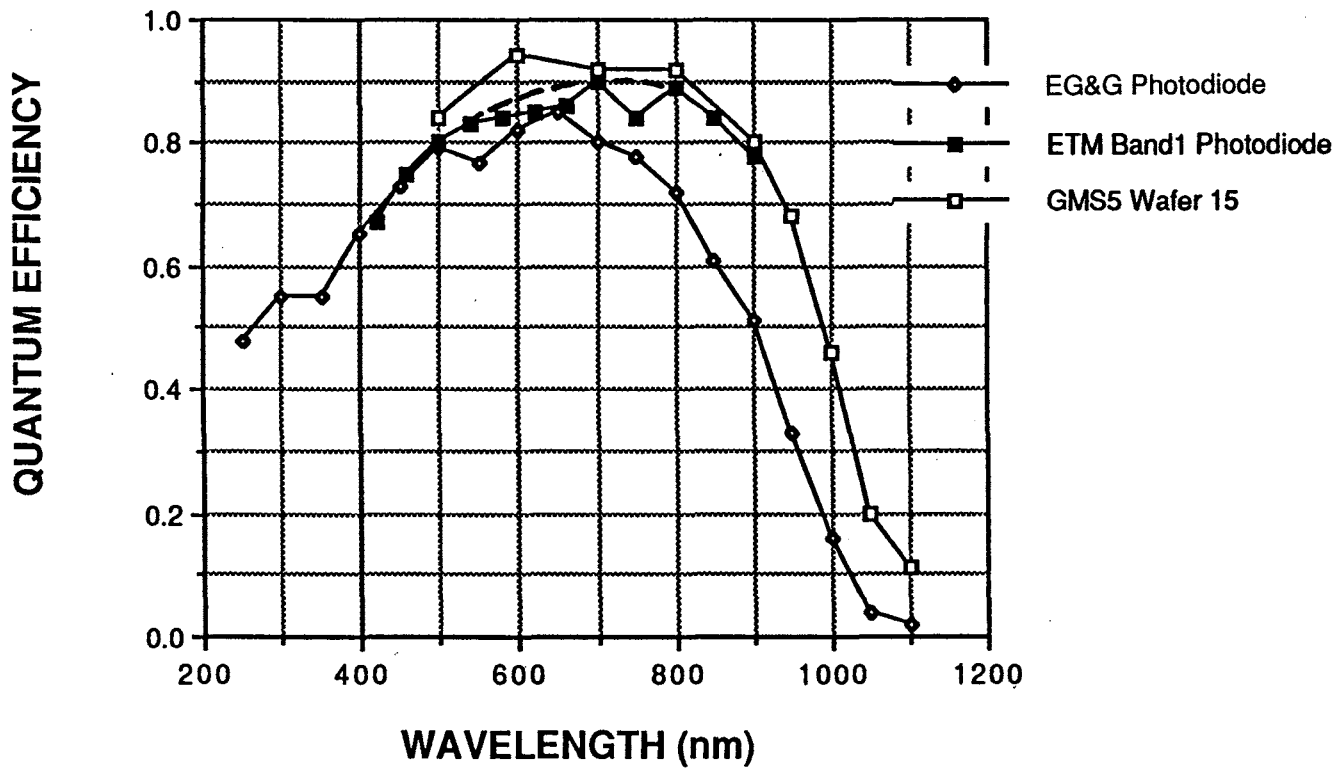

7/91
91-0441-22AB

DASHED LINE ILLUSTRATES EXPECTED PERFORMANCE

PRELIMINARY SCANNER POINTING BUDGET ALLOCATION

HUGHES

SANTA BARBARA RESEARCH CENTER
a subsidiary

ALONG TRACK ERROR SOURCES	MAXIMUM DEVIATION FROM NOMINAL IN μR	REPEATABILITY IN μR	KNOWLEDGE IN μR
1) BAND X TO BAND 7	440 (480)		
• BAND X POSITION			64
• BAND 7 POSITION			64
2) MOTOR BEARING RUNOUT; BAND 7 TO +X ALIGNMENT CUBE FACE		150 (166)	
3) TILT MECHANISM ERROR; BAND 7 TO +X ALIGNMENT CUBE FACE	4360 (4360)	90	
• -Y AXIS UP: • BAND 7 POSITION			64
• +X CUBE FACE POSITION			50
• +Y AXIS UP: • BAND 7 POSITION		(56)	64
• +X CUBE FACE POSITION			50
4) SCAN CURVATURE AND TILT; BAND 7 TO NOMINAL X-Z PLANE	4000 (4000)		
• BAND 7 POSITION			64
5) SCAN PLANE ALIGNMENT; NOMINAL Y-Z PLANE TO CUBE +X AND +Z FACES			
• BAND 7 POSITION			64
• +Z CUBE FACE POSITION			50
RSS TOTAL		180 (175)	180 (200)

TOTAL POSITION UNCERTAINTY, ALONG TRACK, BAND X TO ALIGNMENT CUBE X-Z PLANE = 251 (266) μR (1σ).
NUMBERS IN PARENTHESIS ARE SPEC VALUES.

7/91
91-0441-37

PRELIMINARY SCANNER POINTING BUDGET ALLOCATION

HUGHES

SANTA BARBARA RESEARCH CENTER
a subsidiary

CROSS TRACK ERROR SOURCES	MAXIMUM DEVIATION FROM NOMINAL IN μR	REPEATABILITY IN μR	KNOWLEDGE IN μR
1) BAND X TO BAND 7 • BAND X POSITION • BAND 7 POSITION	190 (480)		 64 64
2) START PULSE INDUCED JITTER IN BAND 7, PIXEL 1 LOCATION		50	
3) MOTOR IRREGULARITY INDUCED JITTER IN BAND 7, PIXEL X LOCATION		190	
4) BAND 7, PIXEL 636 TO +X ALIGNMENT CUBE FACE • PIXEL 636 POSITION • +X CUBE FACE POSITION			 64 50
5) BAND 7 PIXEL X TO BAND 7, PIXEL 636 (SCAN NONLINEARITY) • PIXEL 636 POSITION • PIXEL X POSITION • ROTARY STAGE POSITION	4000 (4000)		 64 64 50
RSS TOTAL		196 (200)	160 (200)

TOTAL POSITION UNCERTAINTY, CROSS TRACK, BAND X, PIXEL X TO +X ALIGNMENT CUBE = 256 (266) μR (1σ).
NUMBERS IN PARENTHESIS ARE SPEC VALUES.

7/91
91-0441-37A

MTF BUDGET ALLOCATION CAN BE COMFORTABLY MET

HUGHES

SANTA BARBARA RESEARCH CENTER
a subsidiary

SUBSYSTEM	ALLOTMENT*	EXPECTATION*	SPEC*
PIXEL SIZE	>0.60	0.636	
OPTICAL BLUR	>0.80	0.900	
ELECTRONIC BANDWIDTH	>0.63	0.707	
TOTAL	>0.30	0.404	>0.30
*MTF VALUES AT 1.13 km HALF-CYCLE SIZE (3.2 mR/CYCLE)			

OPTICAL DESIGN APPROACH

RICHARD CLINE

7/91
91-0441-94

OPTICS PRESENTATION PLAN

HUGHES

SANTA BARBARA RESEARCH CENTER
a subsidiary

- REQUIREMENTS
- OPTICAL LAYOUT/FUNCTIONAL DESCRIPTION
- KEY ISSUES RELATING TO ELEMENT DESIGN
- PERFORMANCE ISSUES

REQUIREMENTS WHICH DRIVE OPTICAL DESIGN

HUGHES

SANTA BARBARA RESEARCH CENTER
a subsidiary

- SPECTRAL SEPARATION AND BAND DEFINITION
  - EIGHT BANDS, 0.4 μm TO 0.9 μm
- IFOV 0.0016 RAD SQUARE
  - FOUR DETECTORS TDI
  - TWO BANDS PER FOCAL PLANE (1.2°)
- SCAN ±58.5° PLUS CALIBRATION
- MISREGISTRATION <0.48 mr ALL BANDS
- POLARIZATION <2%
  - APPLIED ±45°
- SYSTEM MTF PER TABLE
  - 312 cy/rad AT NYQUIST
    - MTF >0.30
- IN-FLIGHT CALIBRATION

OPTICAL SYSTEM BASELINE PERFORMANCE

HUGHES

SANTA BARBARA RESEARCH CENTER
a subsidiary

• OPTICAL FORM:	OFF-AXIS PARABOLA MIRROR	
• THROUGHPUT:	BANDS 1, 2	0.31
	BANDS 3, 6	0.39
	BANDS 7, 8	0.35
• CLEAR APERTURE:	3.0-IN. DIAMETER	
• NO IMAGE ROTATION		
• OPTICAL BLUR	>0.80 MTF	
• INSTANTANEOUS FIELD	1 PIXEL (0.0016 RAD) × 11 PIXELS (0.0176 RAD)	
• AFOCAL RATIO:	1:4	
• EFL AT DETECTORS:	6.0 INCH	

7/91
91-0441-97

OPTICS PRESENTATION PLAN

HUGHES

SANTA BARBARA RESEARCH CENTER
a subsidiary

- REQUIREMENTS
- OPTICAL LAYOUT/FUNCTIONAL DESCRIPTION
- KEY ISSUES RELATING TO ELEMENT DESIGN
- PERFORMANCE ISSUES

SeaWiFS
BASIC OPTICAL LAYOUT

HUGHES

SANTA BARBARA RESEARCH CENTER
a subsidiary

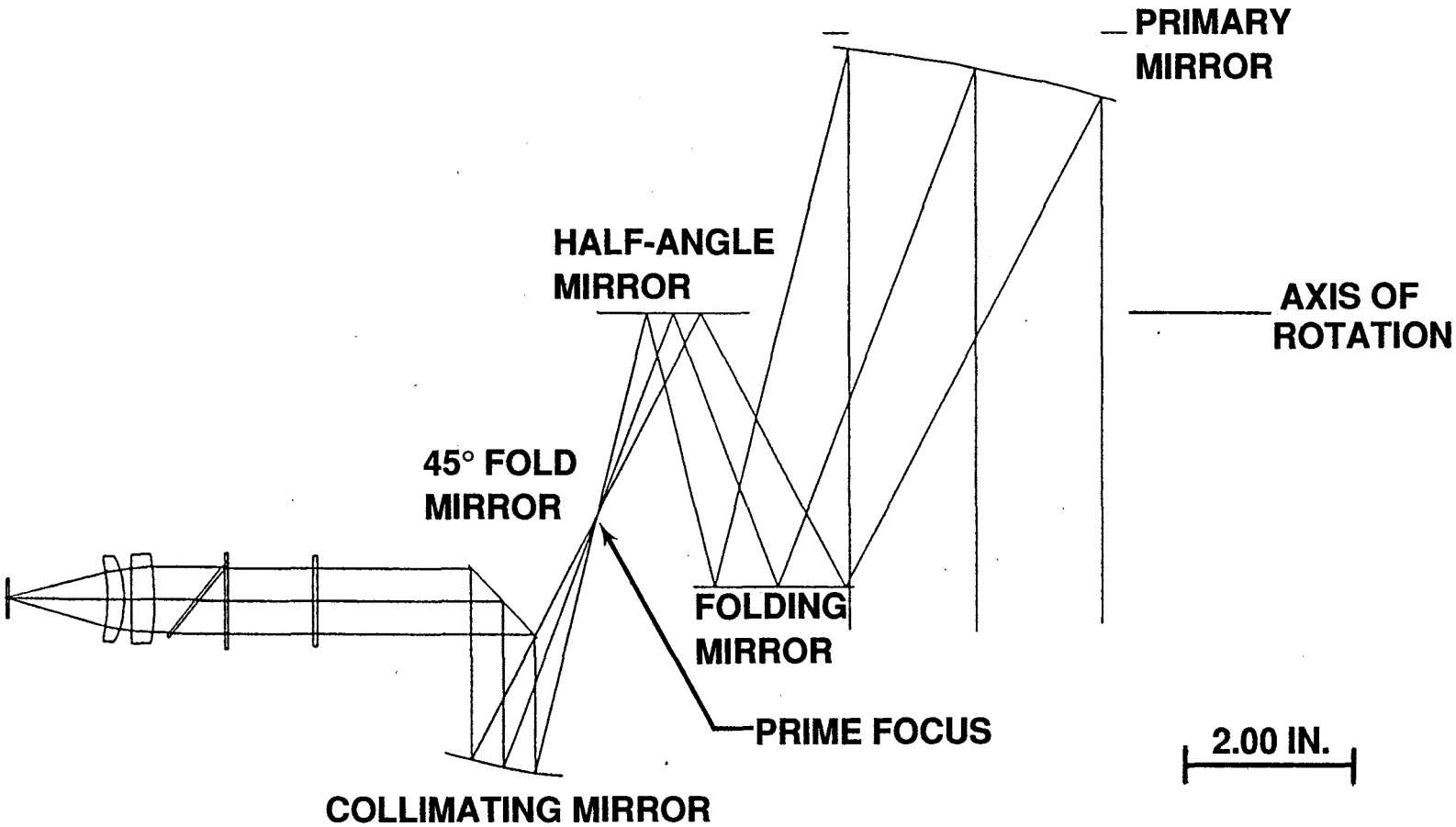

6/91
91-0441-98

SeaWiFS WITH 3 IN. APERTURE

THREE VIEWS OF THE OPTICAL SYSTEM DEFINE THE CLEAR APERTURES

HUGHES

SANTA BARBARA RESEARCH CENTER
a subsidiary

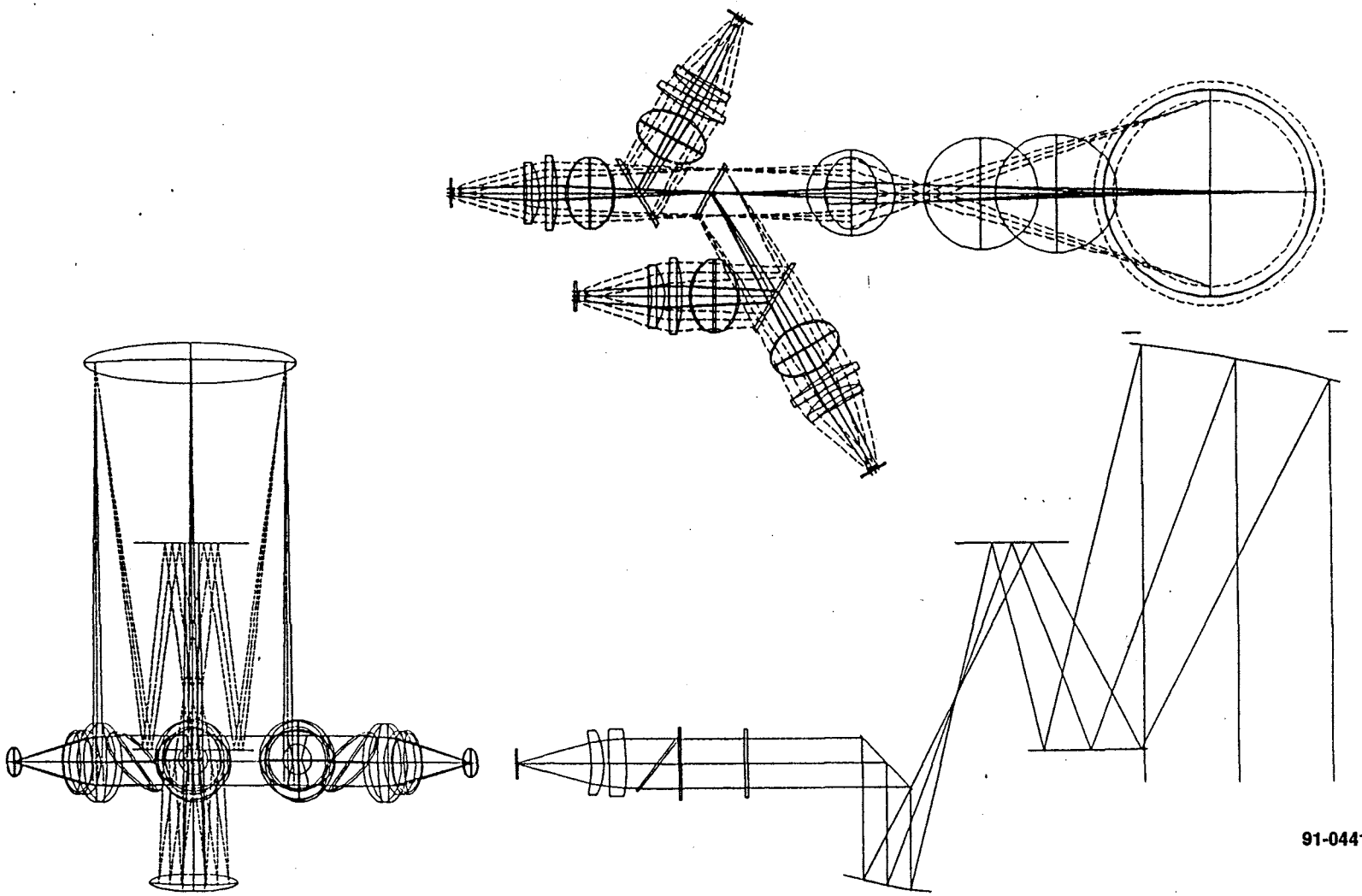

6/91
91-0441-98A

IDENTICAL LENS ELEMENTS ARE USED FOR ALL SPECTRAL BANDS

HUGHES

SANTA BARBARA RESEARCH CENTER
a subsidiary

- DICHROIC FILTERS ARE LONG WAVE PASS
- COMPENSATORS ARE ADJUSTABLE

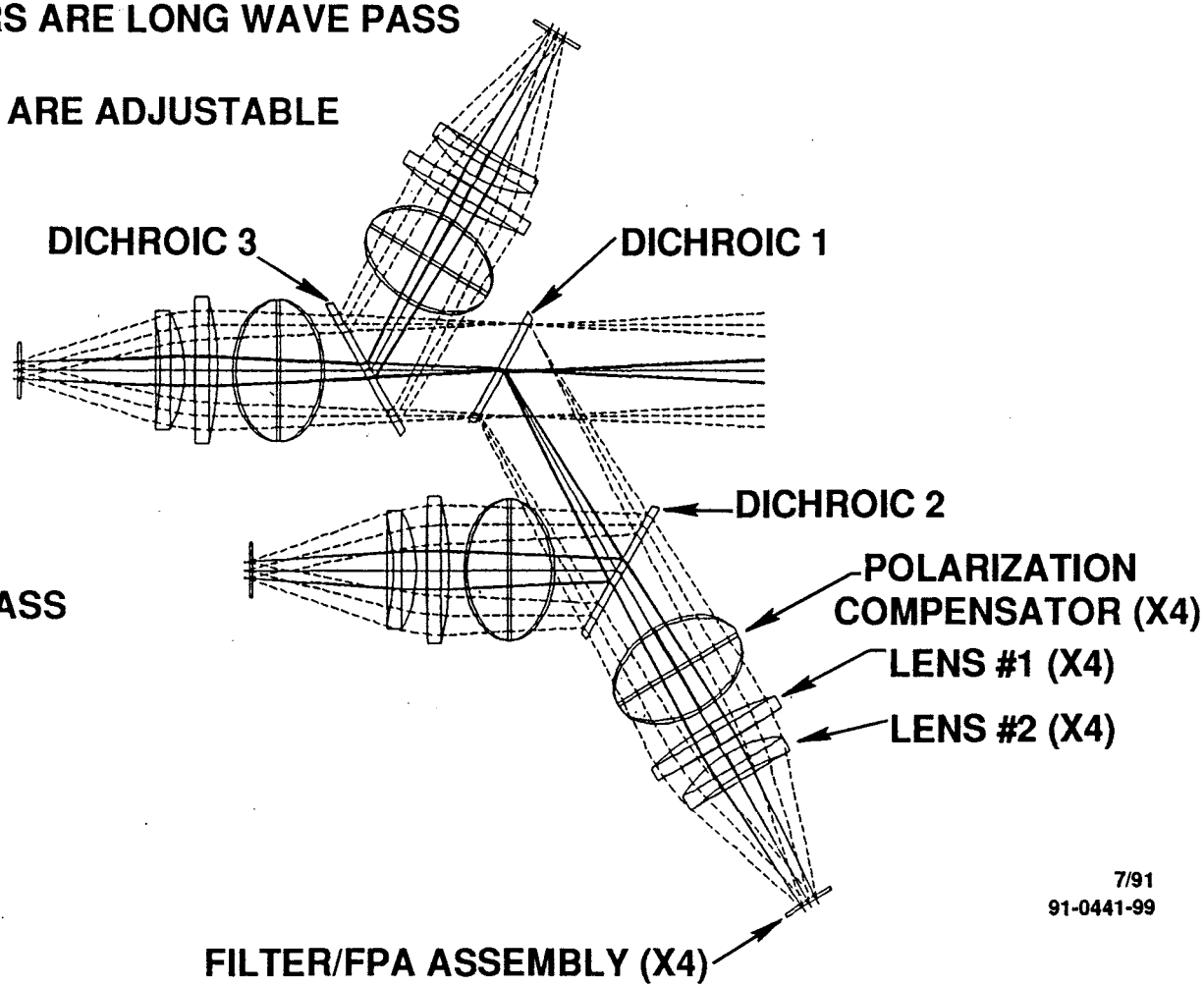

RELAY WITH SF52 GLASS

1.25 IN.

7/91
91-0441-99

SEQUENCE SHOWING THE INSTRUMENT SCAN

HUGHES

SANTA BARBARA RESEARCH CENTER
a subsidiary

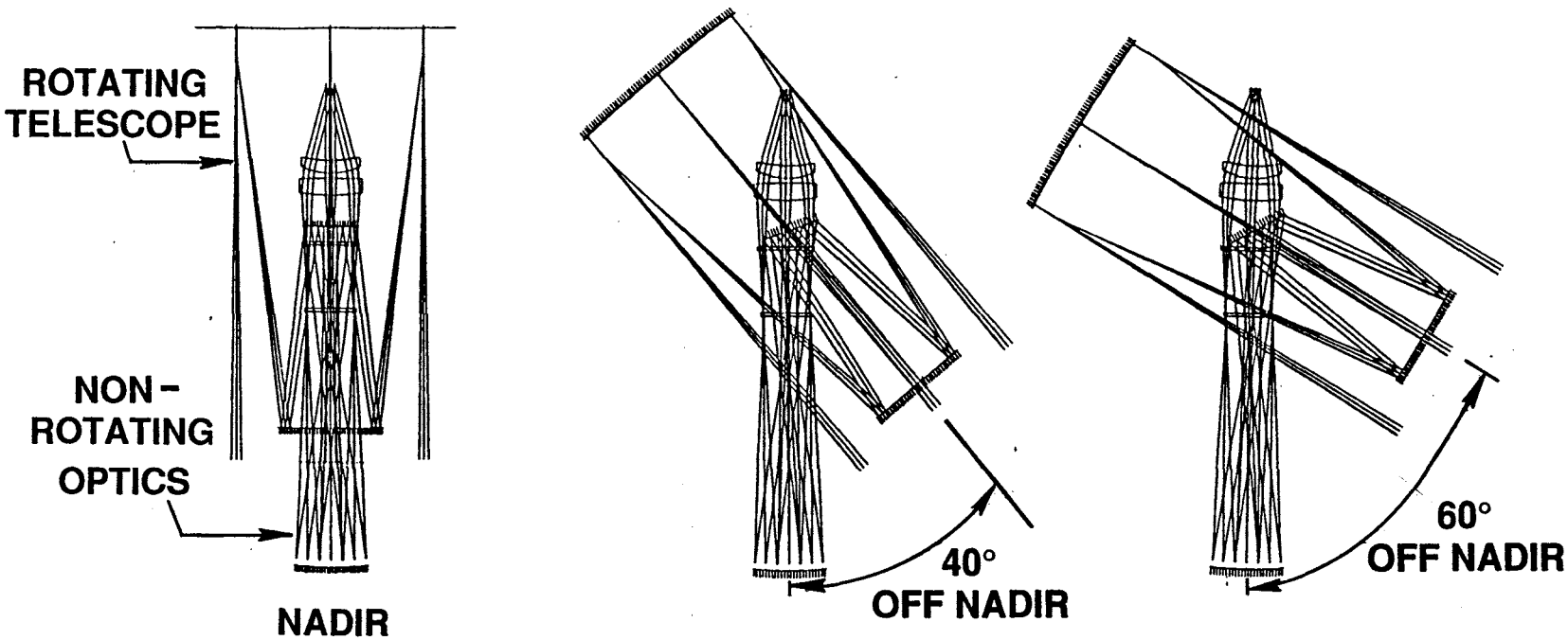

6/91
91-0441-100

IMAGE QUALITY ILLUSTRATED BY PLOT OF RADIAL ENERGY DISTRIBUTION

HUGHES

SANTA BARBARA RESEARCH CENTER
a subsidiary

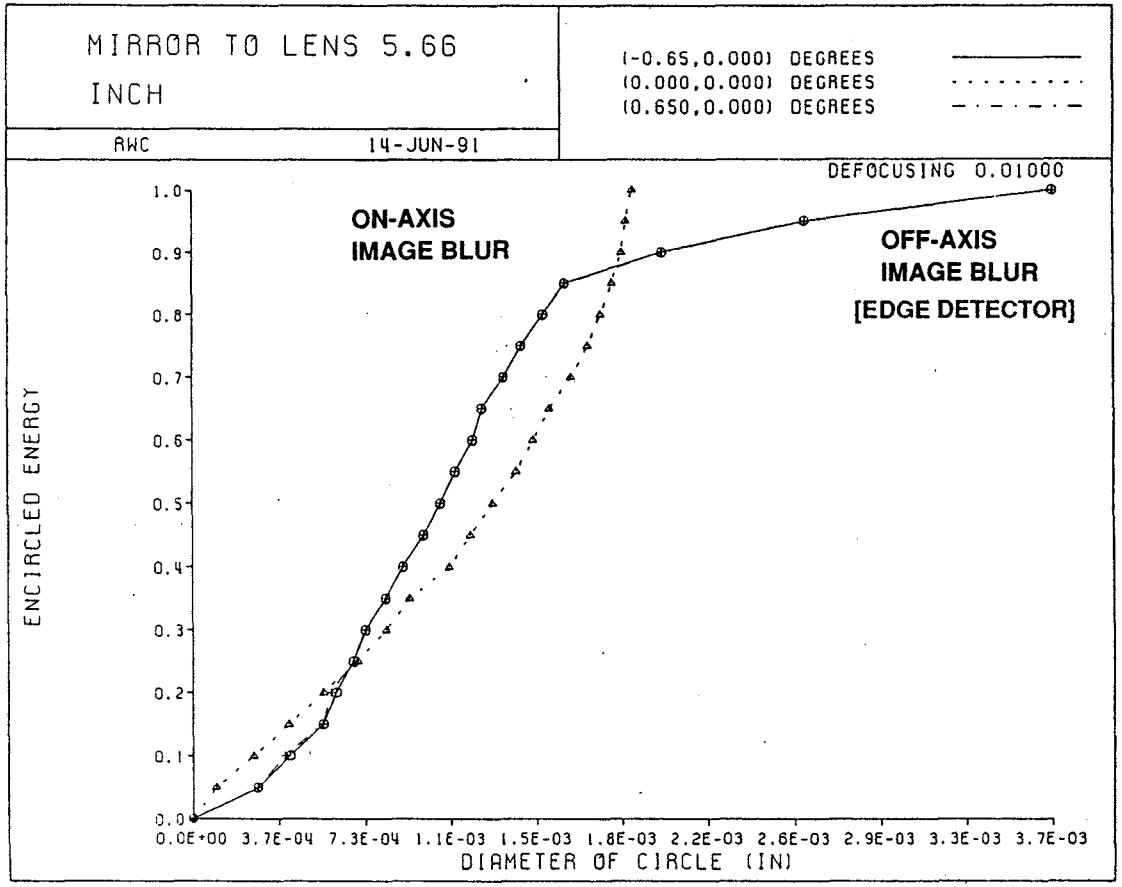

6/91
91-0441-103

THE IMAGE QUALITY ILLUSTRATED BY SPOT DIAGRAM SHOWS TOLERANCE TO DEFOCUS AND FIELD ANGLE

HUGHES

SANTA BARBARA RESEARCH CENTER
a subsidiary

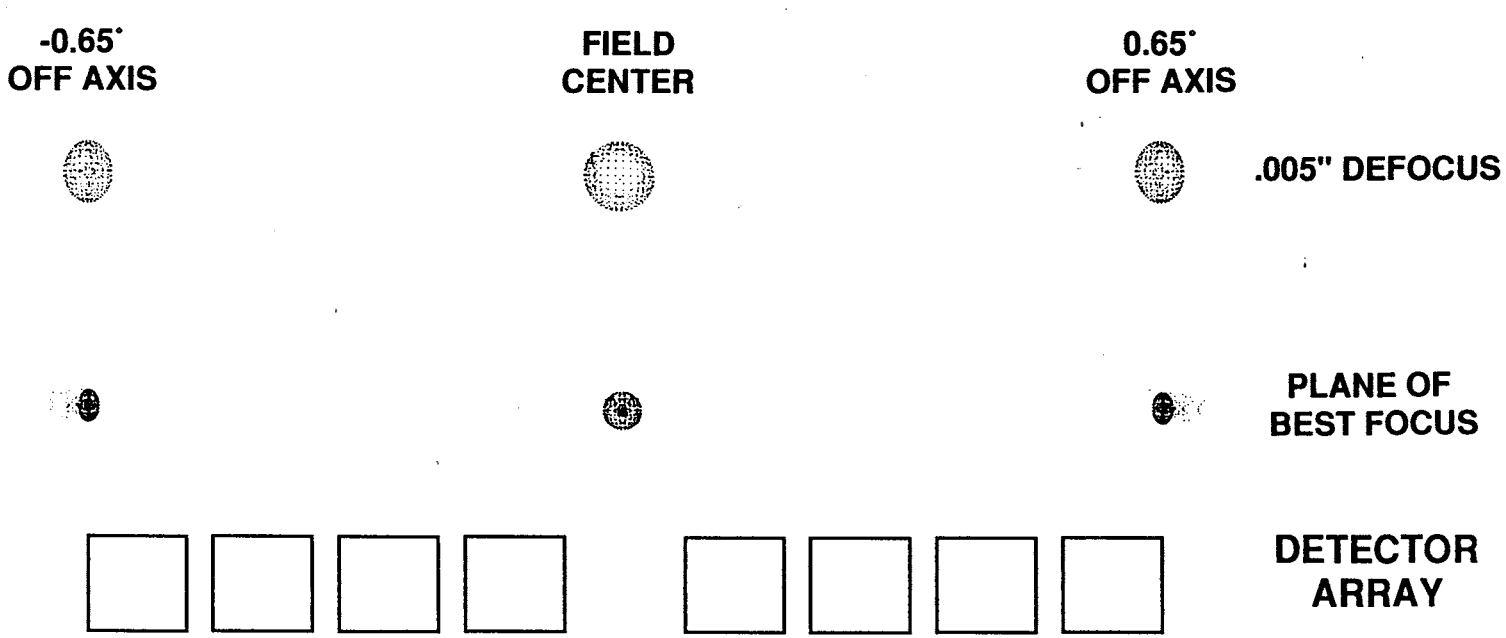

7/91
91-0441-104

OPTICAL SYSTEM EASILY MEETS MTF REQUIREMENTS

HUGHES

SANTA BARBARA RESEARCH CENTER
a subsidiary

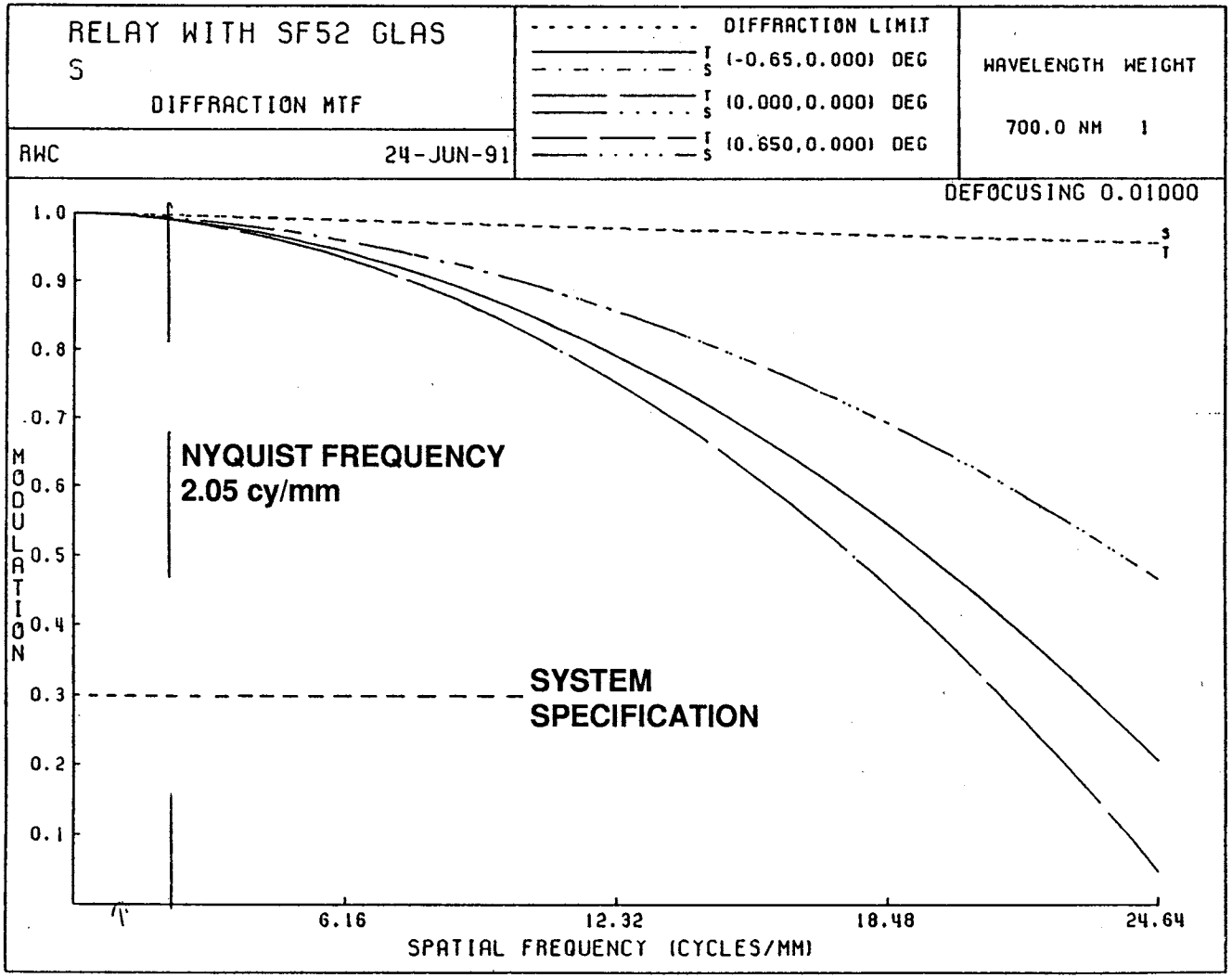

7/91
91-0441-105

OPTICS PRESENTATION PLAN

HUGHES

SANTA BARBARA RESEARCH CENTER
a subsidiary

- REQUIREMENTS
- OPTICAL LAYOUT/FUNCTIONAL DESCRIPTION
- KEY ISSUES RELATING TO ELEMENT DESIGN
  - OPTICAL FILTERS/FPA INTERFACE
  - ROTATING TELESCOPE/HALF-ANGLE MIRROR
  - SOLAR CALIBRATOR
  - CONDENSING LENS/EFL CORRECTION
- PERFORMANCE ISSUES

CONVERGENT CONE LIMITED TO f/2 TO MINIMIZE SPECTRAL SHIFT OF FILTER PEAK TRANSMISSION WAVELENGTH

HUGHES

SANTA BARBARA RESEARCH CENTER
a subsidiary

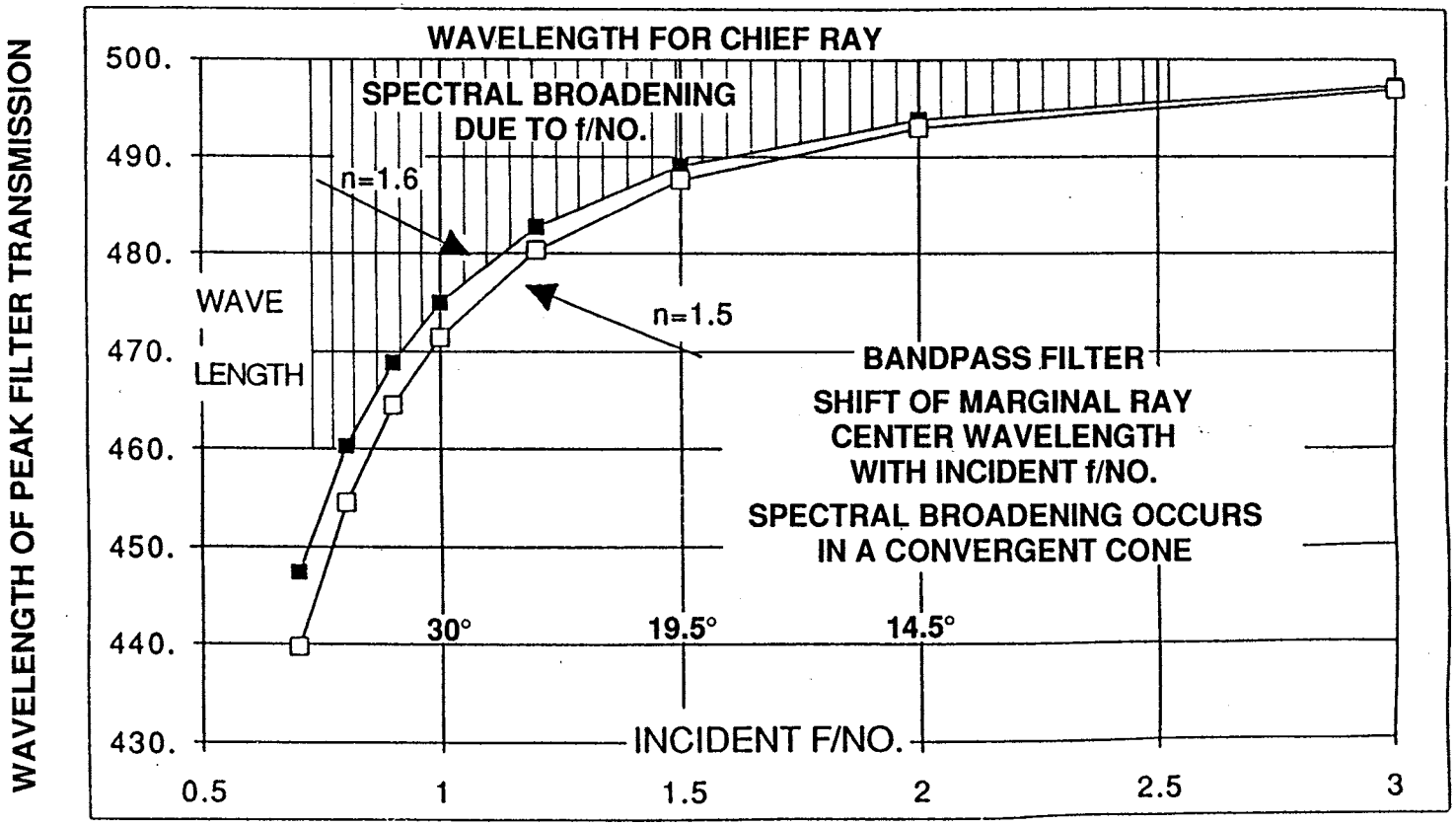

7/91
91-0441-108

THE SPECTRAL SHIFT FROM TEMPERATURE CHANGE DICTATES NEED FOR THERMAL ANALYSIS

HUGHES

SANTA BARBARA RESEARCH CENTER
a subsidiary

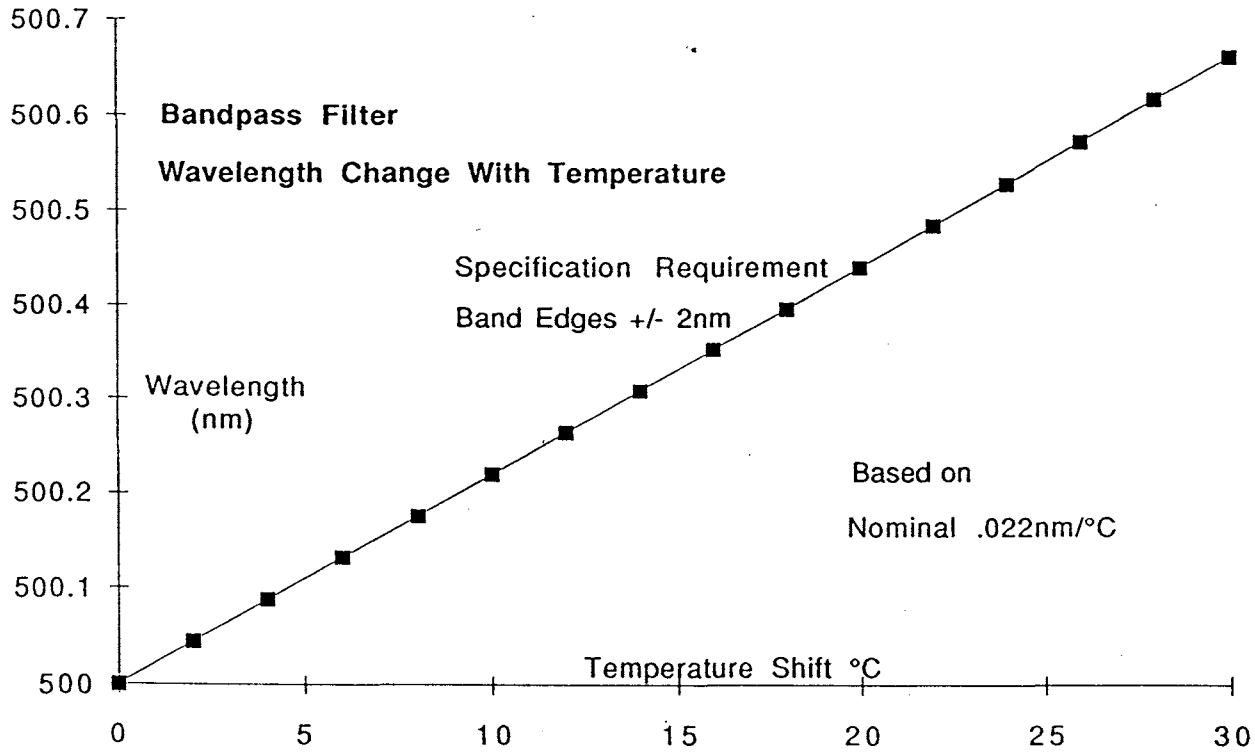

7/91
91-0441-109

LIMITATIONS IMPOSED BY HALF-ANGLE MIRROR ARE ACCEPTABLE

HUGHES

SANTA BARBARA RESEARCH CENTER
a subsidiary

- THE MIRROR CLEAR APERTURE IS 0.8 IN X 1.65 IN.
- THE MIRROR MUST BE THIN--0.1 IN THICK IS PROPOSED COMPROMISE
- THE SUPPORT CONCEPT ILLUSTRATED ATTACHES AT ONE EDGE
- CANDIDATE MATERIALS ARE UNDER REVIEW
- 5 WAVES OF SURFACE CURVE ARE ACCEPTABLE

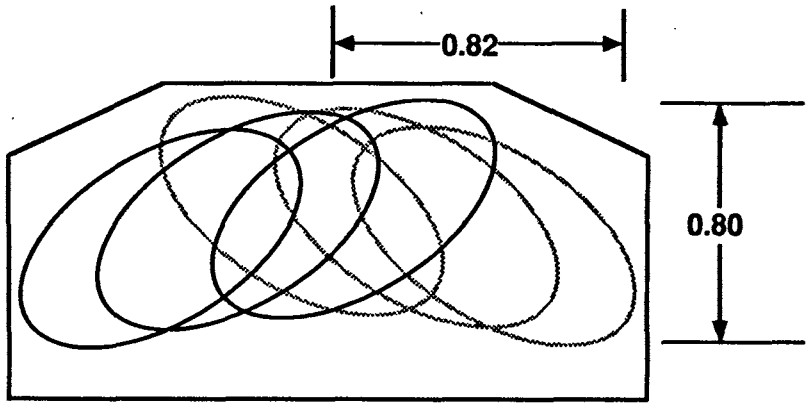

MATERIAL CANDIDATES
- BERYLLIUM / BERYLLIUM
- SAPPHIRE / INVAR 42
- SILICON / INVAR
- SILICON / GFRE

GA-147 ADHESIVE

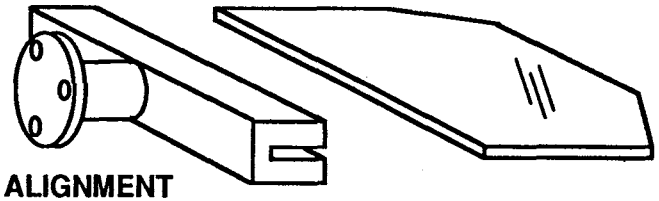

LOW SCATTER SURFACE POLISH
5 WAVE SURFACE FLATNESS

LAP BASE FOR ALIGNMENT
180 RPM ROTATION

6/91
91-0441-115

PERFORMANCE INFLUENCE OF HALF-ANGLE MIRROR SCANNING

HUGHES

SANTA BARBARA RESEARCH CENTER
a subsidiary

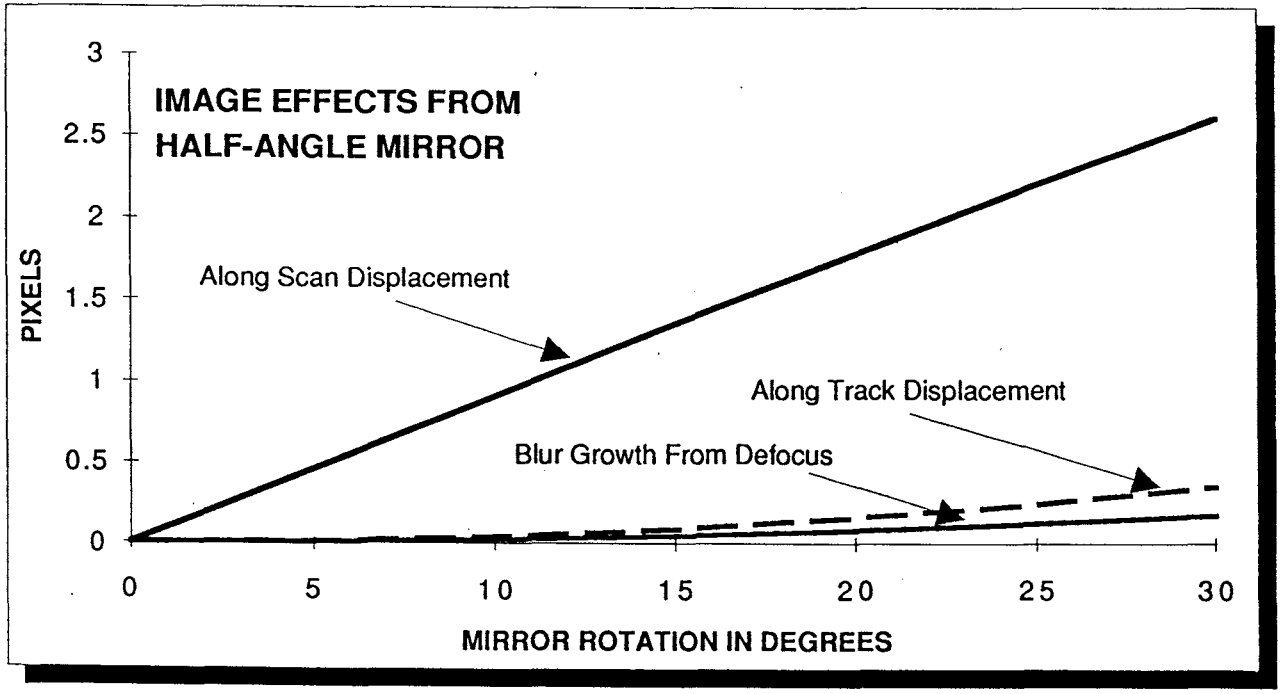

6/91
91-0441-116

LENS SPACING CHANGE COMPENSATES CHROMATIC ABERRATION

HUGHES

SANTA BARBARA RESEARCH CENTER
a subsidiary

- LENS MATERIALS MUST TRANSMIT 400 nm—THIS ELIMINATES HALF OF GLASS CATALOG
- HIGH INDEX GLASSES REQUIRED FOR DOUBLET—INDEX 1.65 MUCH PREFERRED TO 1.5
- THE FLINT GLASS IS PREFERRED AS RADIATION RESISTANCE POOR FOR CROWN GLASSES
- ALTERNATIVE—EMPLOY FUSED SILICA WITH ASPHERIC
- COLOR CORRECTION IS ACCOMPLISHED BY SPACING LENS ELEMENTS

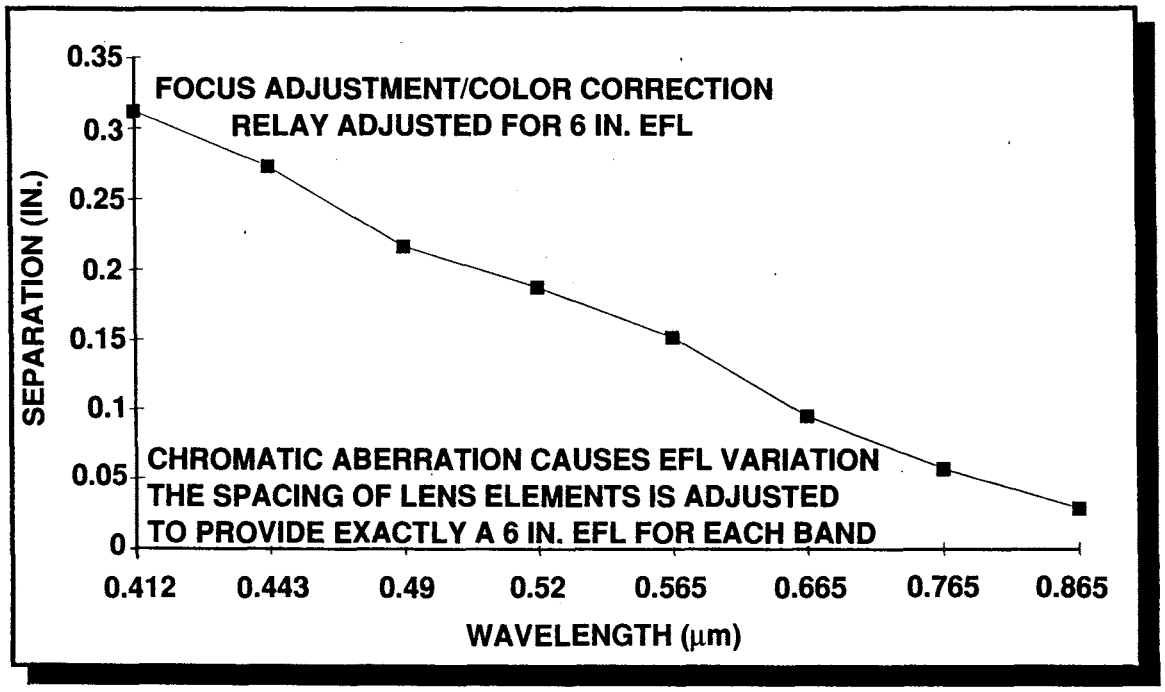

7/91
91-0441-117

PRELIMINARY OPTICS/FPA INTERFACE CONFIGURATION

HUGHES
SANTA BARBARA RESEARCH CENTER
a subsidiary

FOCAL PLANE CONFIGURATION SHOWING DETECTORS AND FILTERS

Each focal plane has two colors with 4 detectors in TDI
The IFOV amounts to ±0.6° in the scan direction.

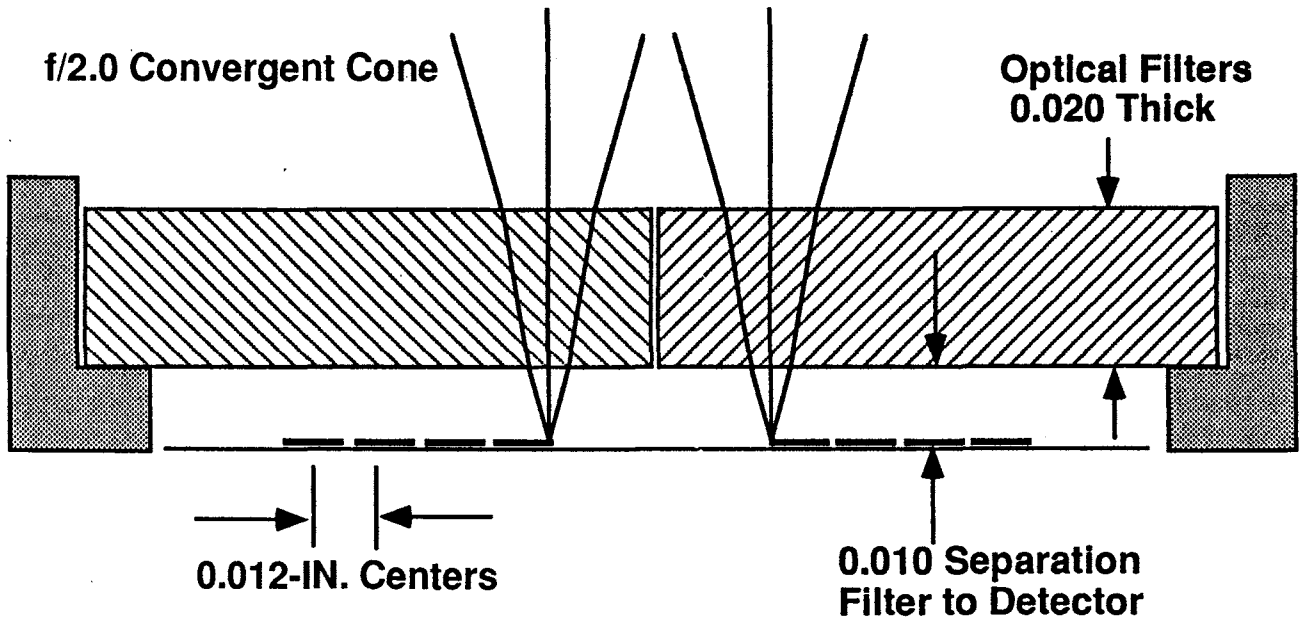

Critical Features
- Positioning of filters over detectors
- Stray light from central division
- Robust assembly yet easy to remove from FPA

7/91
91-0441-118

LAUNCH TIME HAS LARGE EFFECT ON SOLAR CALIBRATOR ANGLE

HUGHES

SANTA BARBARA RESEARCH CENTER
a subsidiary

SOUTH POLE -- NOON EQUATOR CROSSING

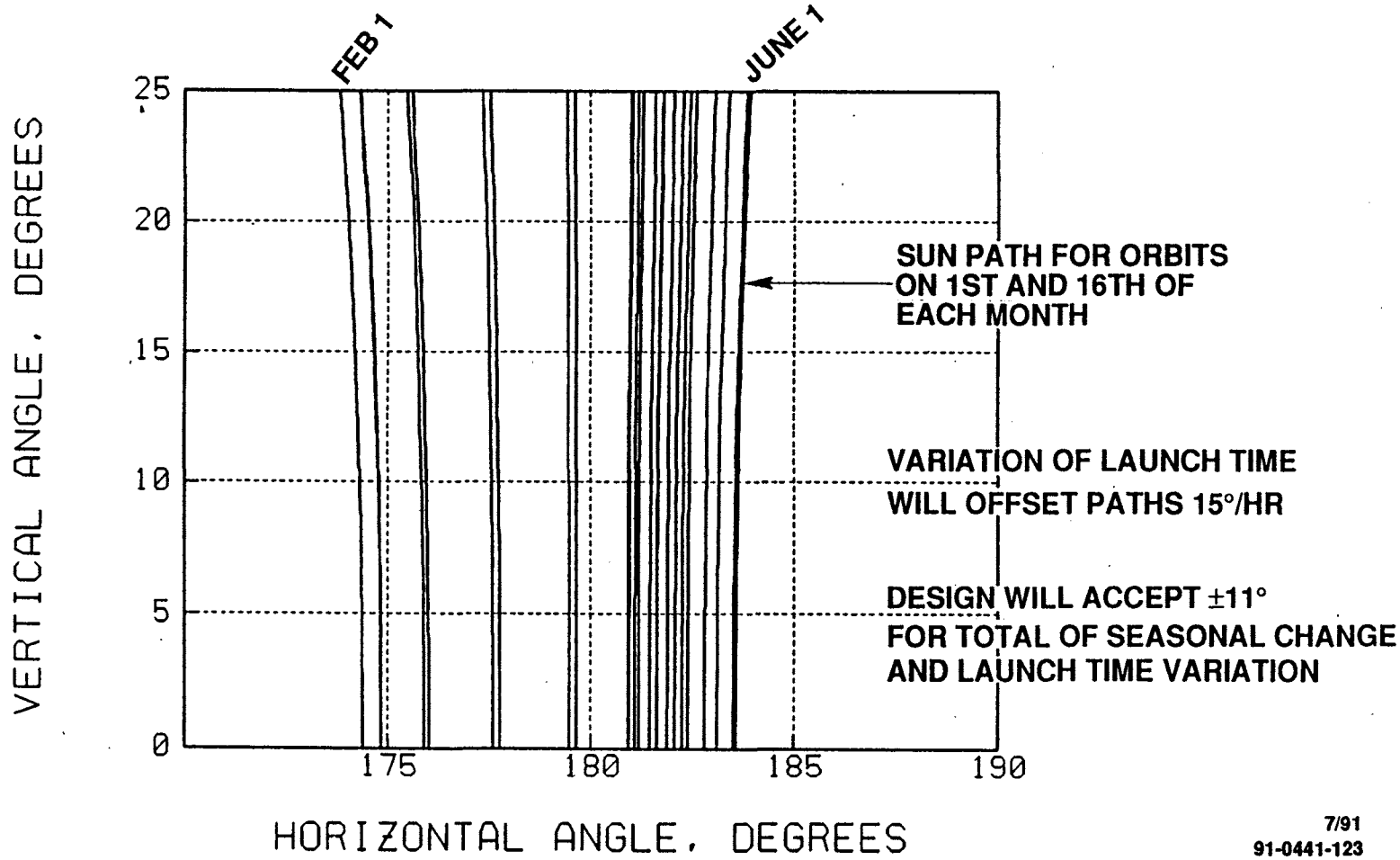

7/91
91-0441-123

OPTICS PRESENTATION PLAN

HUGHES

SANTA BARBARA RESEARCH CENTER
a subsidiary

- REQUIREMENTS
- OPTICAL LAYOUT/FUNCTIONAL DESCRIPTION
- KEY ISSUES RELATING TO ELEMENT DESIGN
- PERFORMANCE PREDICTIONS
  - POLARIZATION
  - FIELD DISTORTION
  - THROUGHPUT
  - VENDOR COMMENT/FILTERS

THE POLARIZATION COMPENSATOR CAN CORRECT 10% POLARIZATION

HUGHES

SANTA BARBARA RESEARCH CENTER
a subsidiary

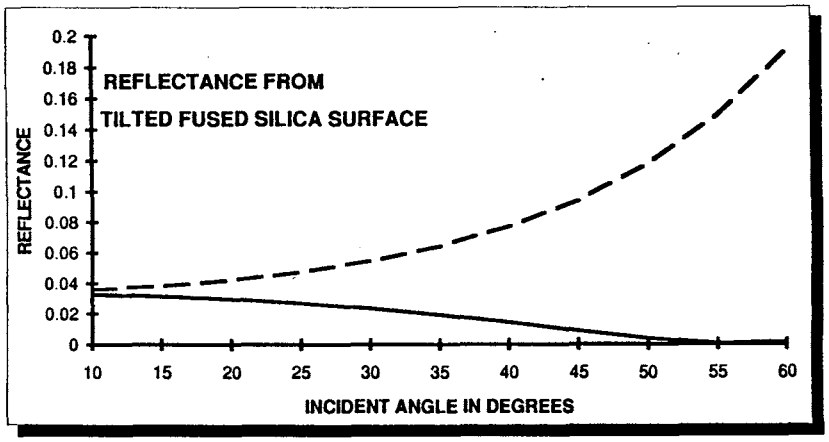

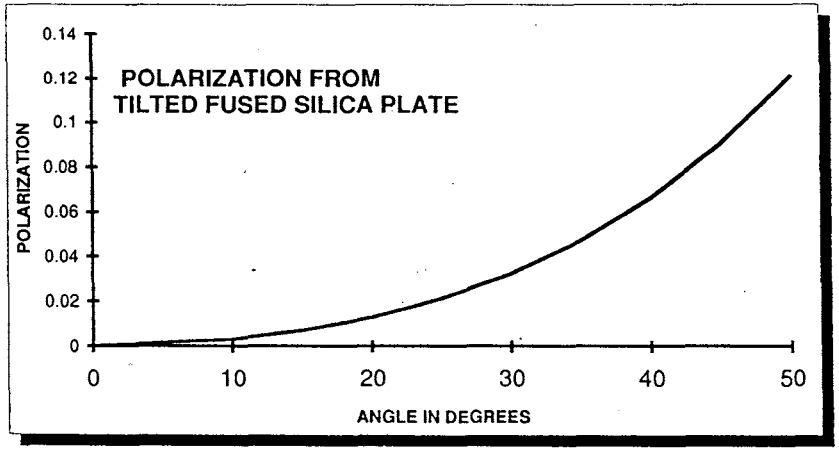

6/91
91-0441-113

ESTIMATED POLARIZATION OF OPTICAL SYSTEM

HUGHES

SANTA BARBARA RESEARCH CENTER
a subsidiary

SW Polar Est 6/19/91

SeaWiFS Polarization Estimate

Polarization with all bands treated at nadir
Wavelength in micrometers

Optical element	Surface tilt Az Angle Deg.	Surface tilt El Angle Deg.	0.412	0.443	0.49	0.52	0.565	0.665	0.765	0.865	
Primary Mirror	10°	0	.002	.001	.000	.000	-.001	-.002	-.001	.000	Mirror polarization
Folding Mirror	20°	0	.005	.002	.000	.000	-.002	-.004	-.002	.000	from SBRC measurement
Half-Angle Mirror	20°	0/30°	.005	.002	.000	.000	-.002	-.004	-.002	.000	of silver mirrors
Collimating mirror	10°	0	.002	.001	.000	.000	-.001	-.002	-.001	.000	
90° fold	45°	0	.025	.015	.008	.007	.004	-.002	-.004	-.004	
Dichroic Beamsplitter	0	30 +/-	.020	.020	.020	.020	.040	.040	.040	.040	Dichroics based on
Dichroic Beamsplitter	0	30 +/-	.020	.020	.030	.030	.020	.020	.030	.030	OCLI judgement
Totals (Nadir, Dichroic -)			.079	.061	.050	.057	.058	.046	.060	.066	Means of summation
Totals (Nadir, Dichroic +)			-0.001	-0.019	-0.042	-0.043	-0.062	-0.074	-0.080	-0.074	is approximate
Polarization Compensator 40° max. Bands compensated in pairs			.000	-.018	.000	.007	.000	-.012	.000	.006	Fused Silica plate

Residual Polarization
Before Compensation

Bars Indicate the Range
Of Uncertainty

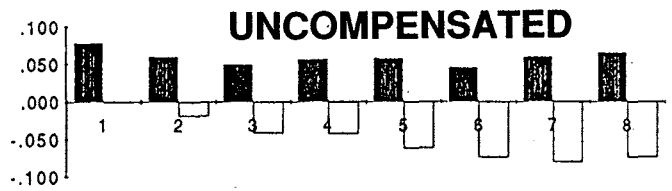

Residual Polarization
After Compensation By Pairs

Imbalance is intentional
To illustrate Approach

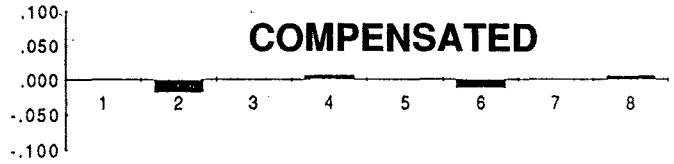

6/91
91-0441-112

SBRC MEASUREMENTS CONFIRM LOW POLARIZATION BY SILVER MIRRORS

HUGHES

SANTA BARBARA RESEARCH CENTER
a subsidiary

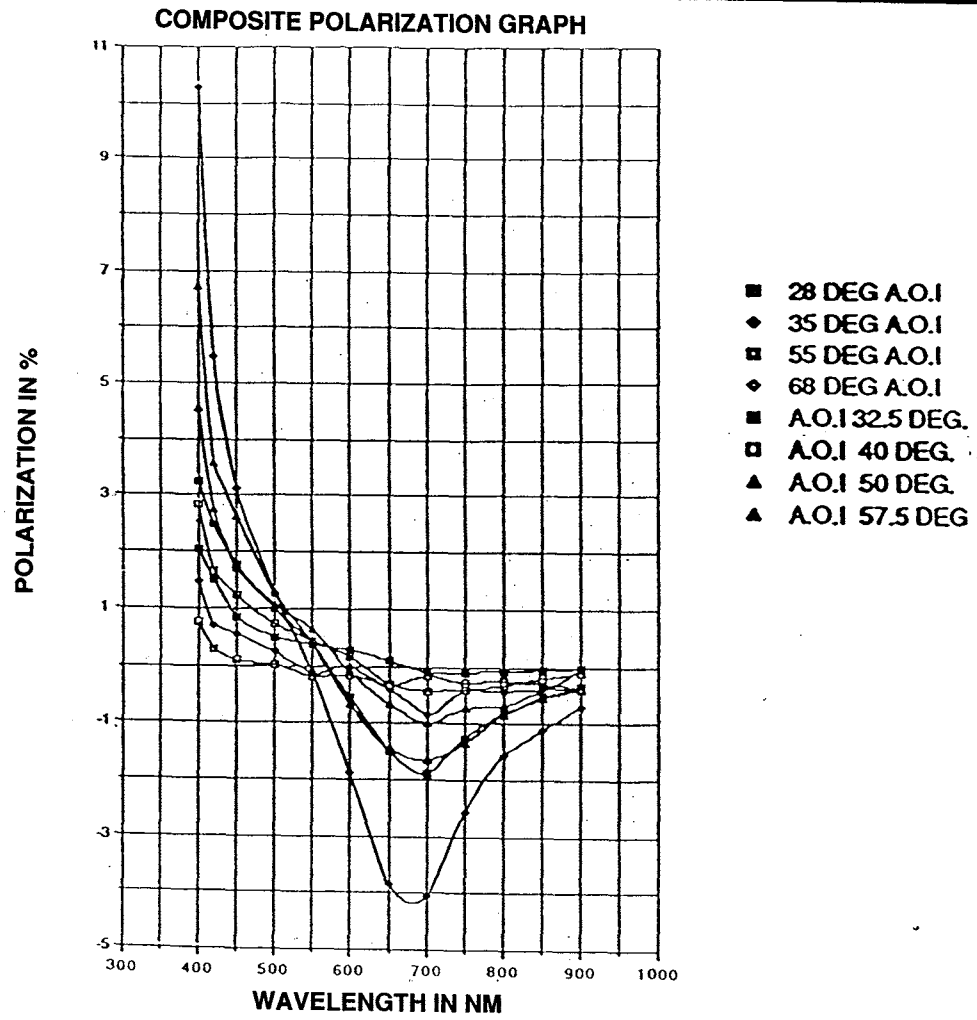

6/91
91-0441-111

FIELD DISTORTION IS VERY SMALL

HUGHES

SANTA BARBARA RESEARCH CENTER
a subsidiary

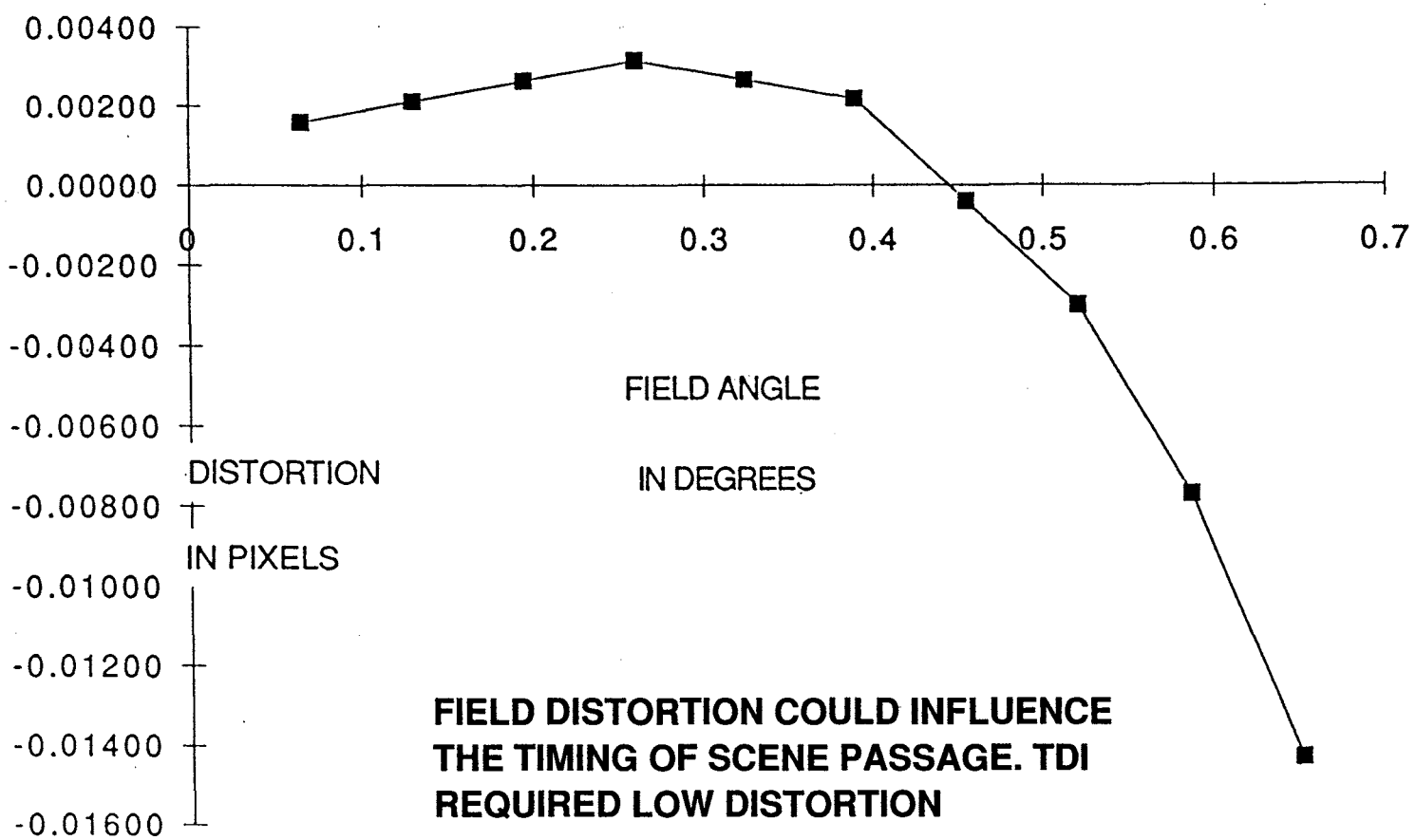

FIELD DISTORTION COULD INFLUENCE THE TIMING OF SCENE PASSAGE. TDI REQUIRED LOW DISTORTION

6/91
91-0441-125

CHANGES HAVE BEEN SUGGESTED TO KEY ITEMS IN FILTER SPECIFICATION

HUGHES

SANTA BARBARA RESEARCH CENTER
a subsidiary

SPECTRAL BAND	LOWER BAND EDGE (μm)	UPPER BAND EDGE (μm)	PASS-BAND (μm)	EDGE RANGE (μm)	SPURIOUS SYSTEM (%)	SUGGESTED* TOLERANCE
1	0.402 ± 0.002	0.422 ± 0.002	$0.020^{+0.004}_{-0.002}$	≤0.010	≤5.0	NO CHANGE
2	0.433 ± 0.002	0.453 ± 0.002	$0.020^{+0.004}_{-0.002}$	≤0.010	≤5.0	NO CHANGE
3	0.480 ± 0.002	0.500 ± 0.002	$0.020^{+0.004}_{-0.002}$	≤0.010	≤5.0	±0.003
4	0.510 ± 0.002	0.530 ± 0.002	$0.020^{+0.004}_{-0.002}$	≤0.010	≤5.0	±0.003
5	0.555 ± 0.002	0.575 ± 0.002	$0.020^{+0.004}_{-0.002}$	≤0.010	≤5.0	±0.003
6	0.655 ± 0.002	0.675 ± 0.002	$0.020^{+0.004}_{-0.002}$	≤0.010	≤5.0	±0.004
7	0.745 ± 0.002	0.785 ± 0.002	$0.040^{+0.004}_{-0.002}$	≤0.020	≤5.0	±0.004
8	0.845 ± 0.002	0.885 ± 0.002	$0.040^{+0.004}_{-0.002}$	≤0.020	≤5.0	±0.004

*BAND EDGE TOLERANCE BASED ON 0.5% OF WAVELENGTH.

SYSTEM TRANSMITTANCE CALCULATIONS INCLUDE ALL ELEMENTS

HUGHES

SANTA BARBARA RESEARCH CENTER
a subsidiary

Element	Band 1,2	Band 3,4	Band 5,6	Band 7,8
Mirror R	0.91	0.96	0.96	0.96
R^5	.624	.815	.815	.815
Dichroic 1	.900	.900	.850	.850
Dichroic 2	.900	.850		
Dichroic 3			.900	.900
Lens 1	.960	.960	.960	.960
Lens 2	.960	.960	.960	.960
Compensator	.920	.920	.920	.920
B.P. Filter	.800	.800	.800	.700
Throughput	.343	.423	.423	.370

6/91
91-0441-127

SUMMARY
OPTICAL DESIGN APPROACH

HUGHES

SANTA BARBARA RESEARCH CENTER
a subsidiary

- EXAMINED ALL ASPECTS OF OPTICAL DESIGN
- IDENTIFIED FEATURES REQUIRING SPECIAL ATTENTION DURING FABRICATION
- PROOF-OF-CONCEPT TESTS ARE PLANNED FOR CRITICAL ITEMS
- SCHEDULE AND PERFORMANCE REQUIREMENTS ARE REASONABLE

SCANNER MECHANICAL DESIGN

BILL FINCHER

6/91
91-0441-135

MECHANICAL DESIGN

HUGHES

SANTA BARBARA RESEARCH CENTER
a subsidiary

- SCANNER ASSEMBLY
- ROTATING TELESCOPE ASSEMBLY
- AFT OPTICS ASSEMBLY
- SOLAR CALIBRATOR
- MOTORS
- ANGULAR MOMENTUM
- CONTAMINATION
- TRANSPORTATION AND HANDLING
- MATERIALS
- WEIGHT AND SIZE

SCANNER ASSEMBLY CONCEPT

HUGHES

SANTA BARBARA RESEARCH CENTER
a subsidiary

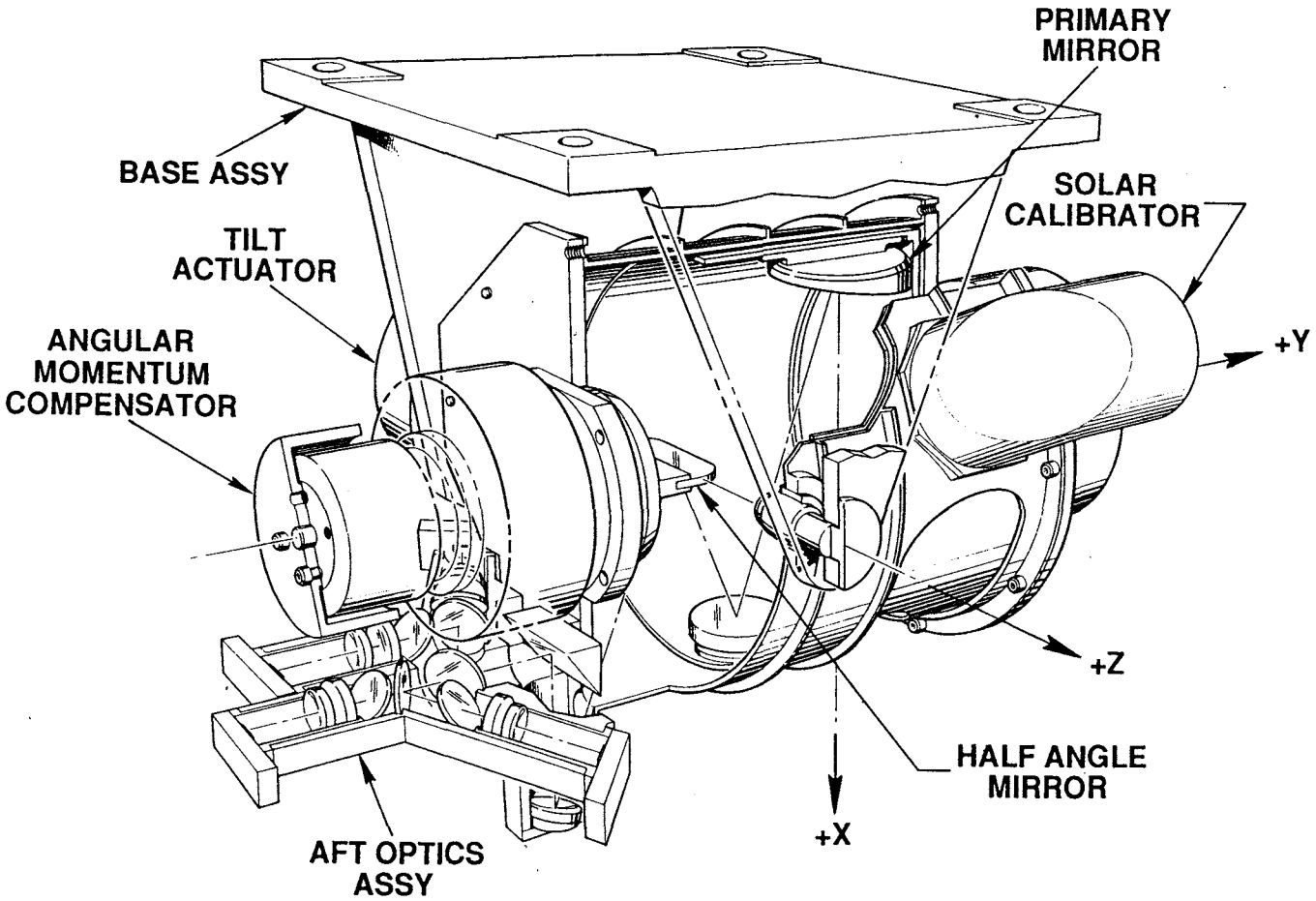

7/91
91-0441-137

TELESCOPE DESIGN MINIMIZES ROTATING MASS

HUGHES

SANTA BARBARA RESEARCH CENTER
a subsidiary

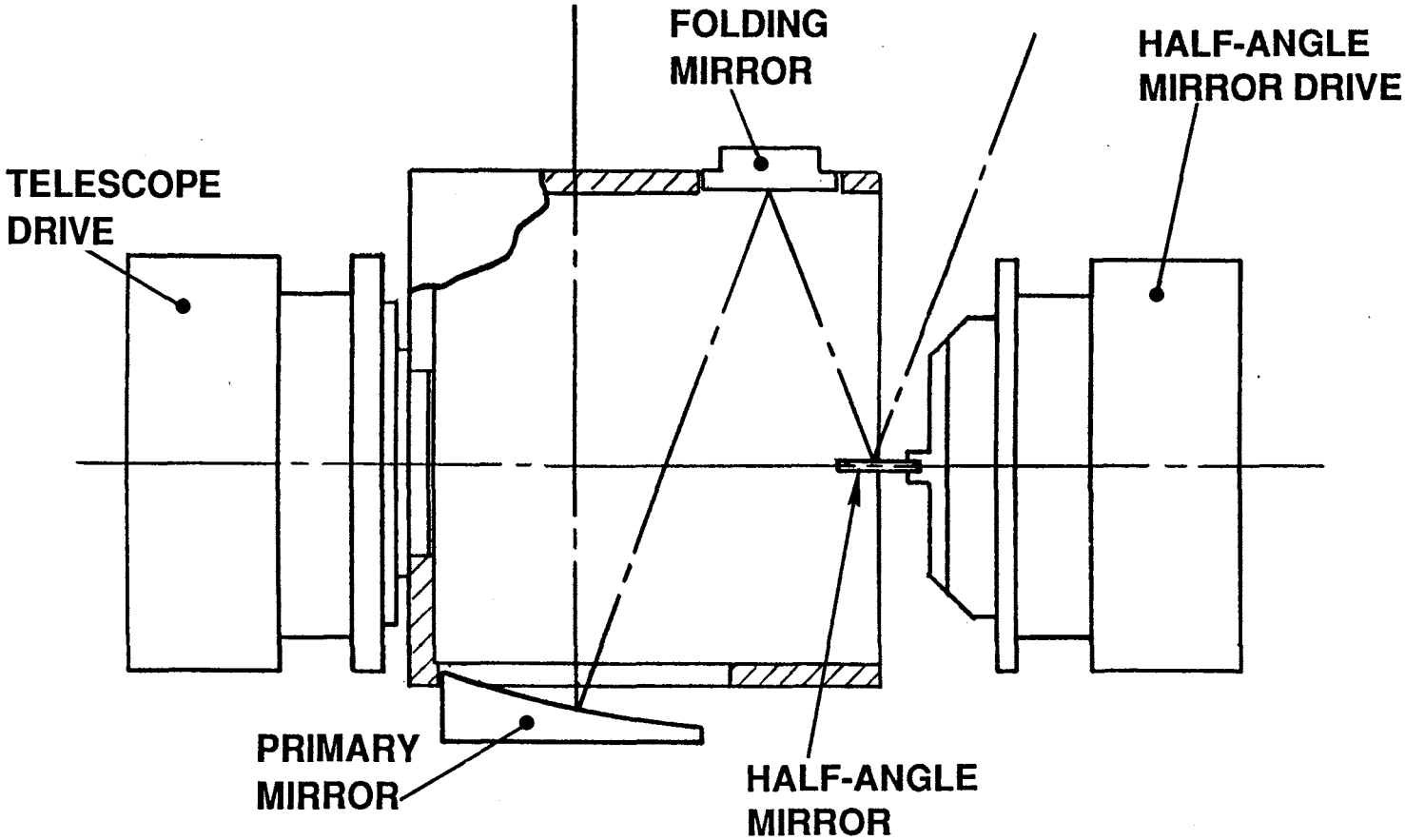

6/91
91-0441-138

PRIMARY MIRROR AND HALF-ANGLE MIRROR MOUNTING CONCEPTS

HUGHES

SANTA BARBARA RESEARCH CENTER
a subsidiary

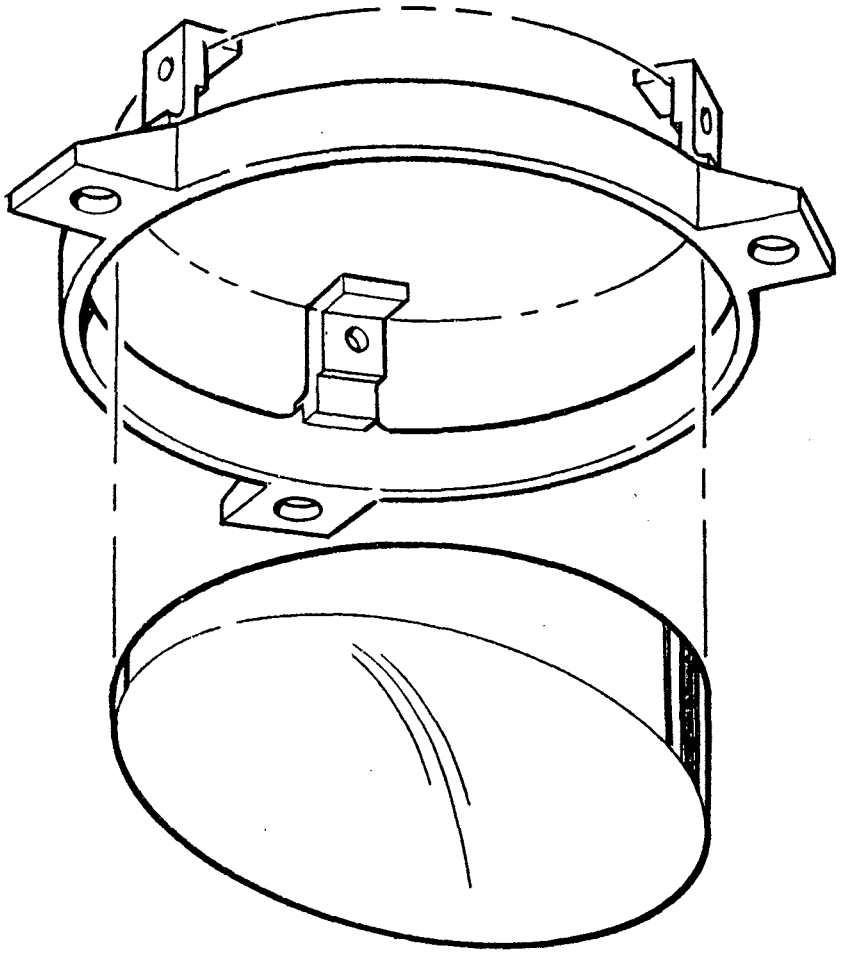

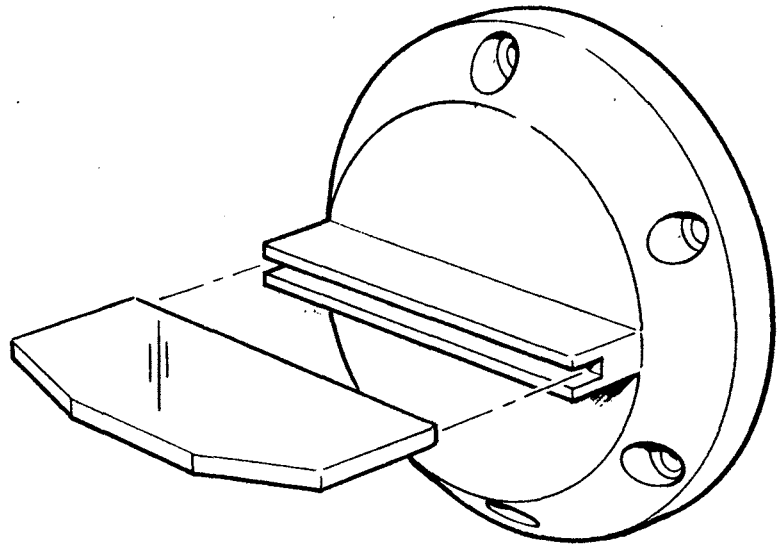

6/91
91-0441-140

ADJUSTMENT CONSIDERATIONS GUIDE AFT OPTICS ASSEMBLY DESIGN

HUGHES

SANTA BARBARA RESEARCH CENTER
a subsidiary

- REPLACEABLE FOCAL PLANE ASSEMBLIES WITHOUT REALIGNMENT IS GOAL

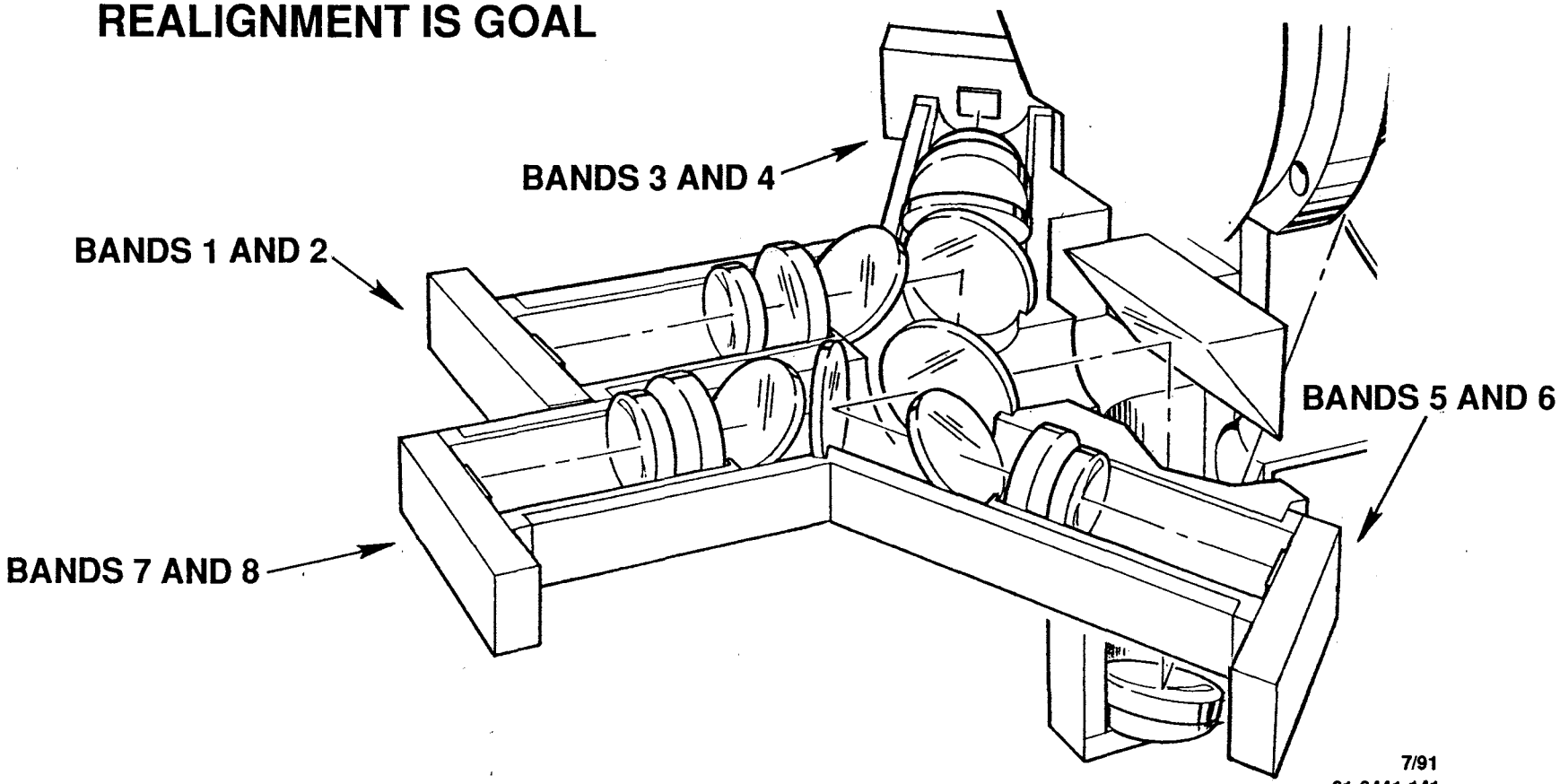

7/91
91-0441-141

PRELIMINARY SOLAR CALIBRATOR CONCEPT ELIMINATES MECHANISM

HUGHES

SANTA BARBARA RESEARCH CENTER
a subsidiary

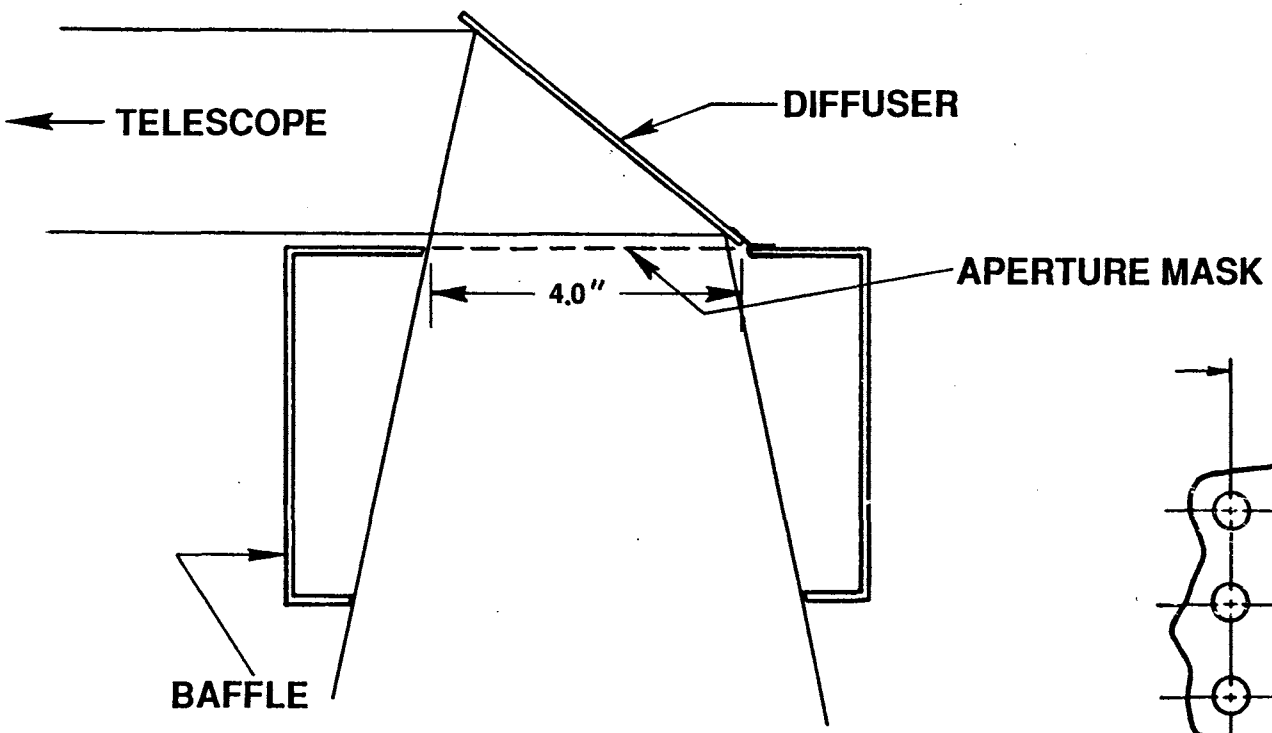

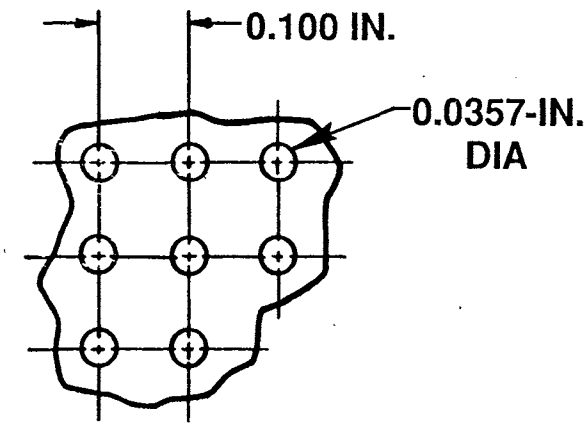

APERTURE
MASK DETAIL

6/91
91-0441-142

SeaWiFS USES FOUR MOTORS

HUGHES

SANTA BARBARA RESEARCH CENTER
a subsidiary

MOTOR	SPEED	TYPE
TELESCOPE DRIVE	360 RPM	BRUSHLESS DC
HALF-ANGLE MIRROR DRIVE	180 RPM	BRUSHLESS DC
ANGULAR MOMENTUM COMPENSATOR	1440 RPM	BRUSHLESS DC
TILT DRIVE	0.625 RPM	STEPPER/ HARMONIC DRIVE

TELESCOPE MOTOR MECHANICAL DESIGN OUTLINE DRAWING

HUGHES

SANTA BARBARA RESEARCH CENTER
a subsidiary

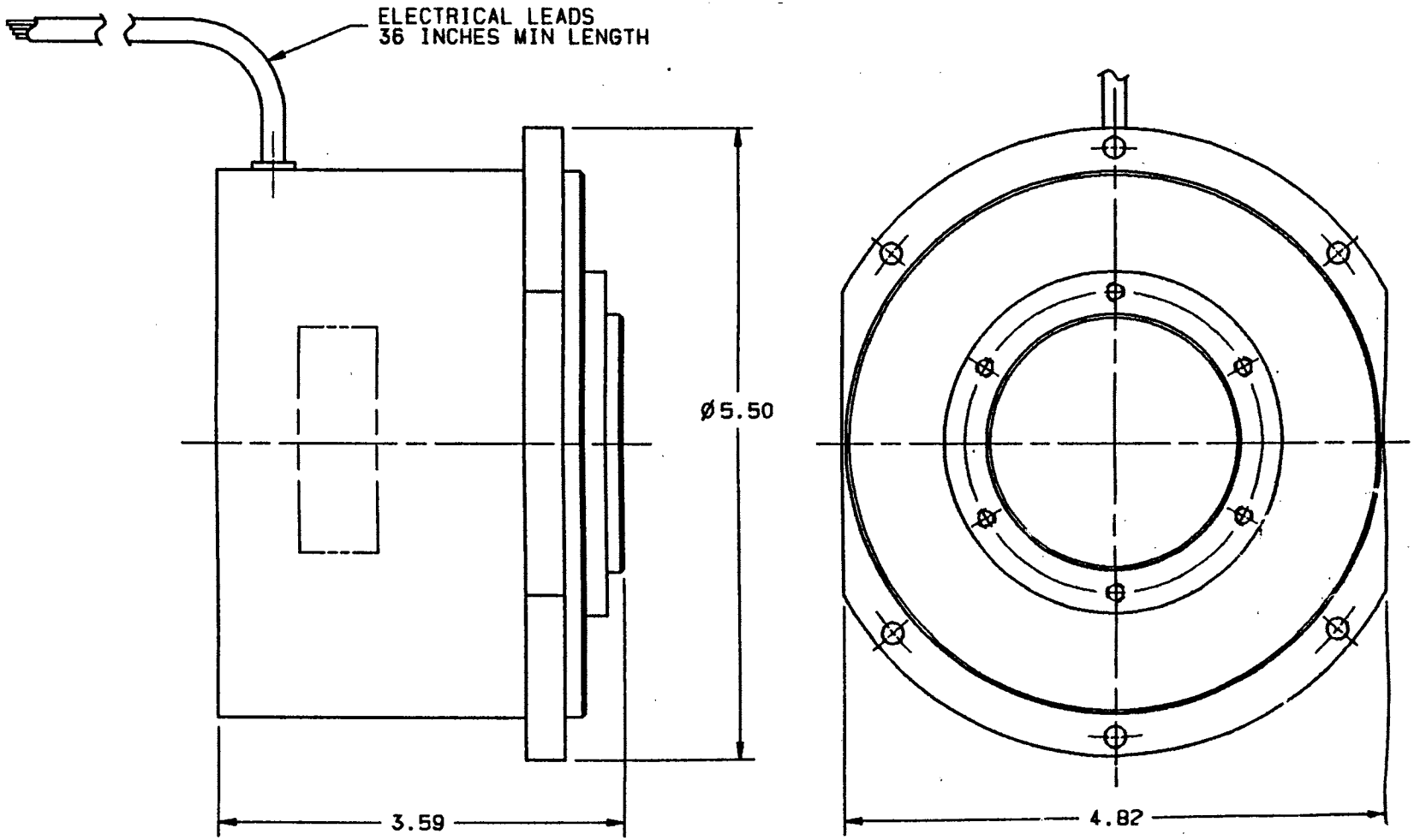

6/91
91-0441-144

PRELIMINARY TELESCOPE AND HALF-ANGLE MIRROR MOTOR SPECIFICATIONS

HUGHES

SANTA BARBARA RESEARCH CENTER
a subsidiary

- BRUSHLESS DC MOTOR
- OPTICAL INCREMENTAL ENCODER
- 5-YEAR LIFE
- 24 POLES, 2 PHASE
- MAXIMUM DRAG TORQUE 10 IN-OZ AFTER 5 YEARS

INITIAL DESIGN GUIDELINES FOR TELESCOPE AND HALF-ANGLE MIRROR MOTORS

HUGHES

SANTA BARBARA RESEARCH CENTER
a subsidiary

- 5-YEAR LIFE
- REDUNDANT MOTOR WINDINGS
- REDUNDANT ENCODER SOURCES AND DETECTORS
- BEARINGS: (PRELIMINARY)
  - BALL AND RACE FINISH – ION PLATED LEAD
  - LUBRICANT: BRAY OIL
  - HAC BEARING LABORATORY WILL BE CONSULTED AND WORK WITH MOTOR VENDOR
- LIFE TEST UNIQUE DESIGNS

PRELIMINARY ANGULAR MOMENTUM ELEMENTS ARE IDENTIFIED

HUGHES

SANTA BARBARA RESEARCH CENTER
a subsidiary

ITEM	SPEED RAD/SEC (RPM)	ROTATING WEIGHT (LB)	INERTIA (OZ-IN-SEC^2)	ANGULAR MOMENTUM (OZ-IN-SEC)
TELESCOPE	37.7 (360 RPM)	2.7	1.3	+49
HALF-ANGLE MIRROR	18.8 (180 RPM)	0.5	0.2	+3.8
MOMENTUM COMPENSATOR	150.8 (1440 RPM)	1.5	0.35	-53

MEASUREMENT OF RESIDUAL ANGULAR MOMENTUM CONCEPT

HUGHES

SANTA BARBARA RESEARCH CENTER
a subsidiary

1. PLACE SCANNER ON A PLATFORM EITHER SUPPORTED BY A LAZY SUSAN OR SUSPENDED FROM A WIRE
2. OPERATE TELESCOPE, HALF-ANGLE MIRROR, ANGULAR MOMENTUM COMPENSATION MOTORS
3. TILT SCANNER
4. SCANNER REACTION WILL BE MEASURED AND MOMENTUM ADJUSTED AS NEEDED

OPTIONS FOR TRIMMING ANGULAR MOMENTUM UNDER CONSIDERATION

HUGHES

SANTA BARBARA RESEARCH CENTER
a subsidiary

- CUT FLYWHEEL
  - MAINTAINS CONSTANT VIBRATION AND EMI (COHERENT NOISE)
  - REQUIRES REBALANCING
- VARY SPEED
  - SIMPLER ADJUSTMENT
  - CHANGE SELECT COMPONENTS ON DRIVE CIRCUIT CARD

TILT DRIVE ASSEMBLY USES STEPPER MOTOR

HUGHES

SANTA BARBARA RESEARCH CENTER
a subsidiary

- PERMANENT MAGNET STEPPER MOTOR WITH HARMONIC DRIVE
- STEPS/REVOLUTION: 38,400
- MAX STEP RATE: 3.75°/SEC
- SPECIFICATION: 40° IN 13 SEC
- CANDIDATE DRIVE: 40° IN 10.6 SEC
- HOLDING TORQUE: 400 IN-LBS POWERED
  175 IN-LBS UNPOWERED
- ENCODER TYPE: TBD
- FLEXIBLE JOINT ON MOTOR, SPHERICAL BEARING ON OPPOSITE SIDE

STRUCTURAL MATERIALS SELECTED FOR SPACE APPLICATION

HUGHES

SANTA BARBARA RESEARCH CENTER
a subsidiary

- STRUCTURE: ALUMINUM, ALUMINUM HONEYCOMB
- MOTORS: STAINLESS STEEL
- OPTICAL MOUNTS: ALUMINUM, DELRIN
- OPTICAL BENCH: ALUMINUM
- OPTICS: GLASS ELEMENTS, SAPPHIRE HALF-ANGLE MIRROR PROBABLE
- ADHESIVES: 2216 EPOXY AND OTHER SPACE-QUALIFIED ADHESIVES
  - ALL MATERIALS SELECTED FOR LOW OUTGASSING PER ASTM E595
    - TOTAL MASS LOSS $\leq$1%
    - COLLECTED VOLATILE CONDENSABLE MATERIAL $\leq$0.1%
    - TEST DATA FROM NASA REFERENCE PUBLICATION 1124

CONTAMINATION CONTROL IS TYPICAL FOR SPACE RADIOMETER

HUGHES

SANTA BARBARA RESEARCH CENTER
a subsidiary

- ASSEMBLY AND TEST
  - MINIMUM REQUIREMENT: CLASS 10,000 ENVIRONMENT
    - CLASS 100 LAMINAR FLOW BENCH WILL BE USED FOR ASSEMBLY
    - COVER OVER APERTURES
    - N_2 PURGE
  - TRANSPORTATION AND STORAGE
    - SHIPPING CONTAINER
    - N_2 PURGE
  - HANDLING AND TRANSPORTATION PROCEDURE INCLUDING PURGE REQUIREMENTS
  - ALL ENCLOSED SPACES VENTED FOR PRESSURE CHANGES

STANDARD TRANSPORTATION REQUIREMENTS

HUGHES

SANTA BARBARA RESEARCH CENTER
a subsidiary

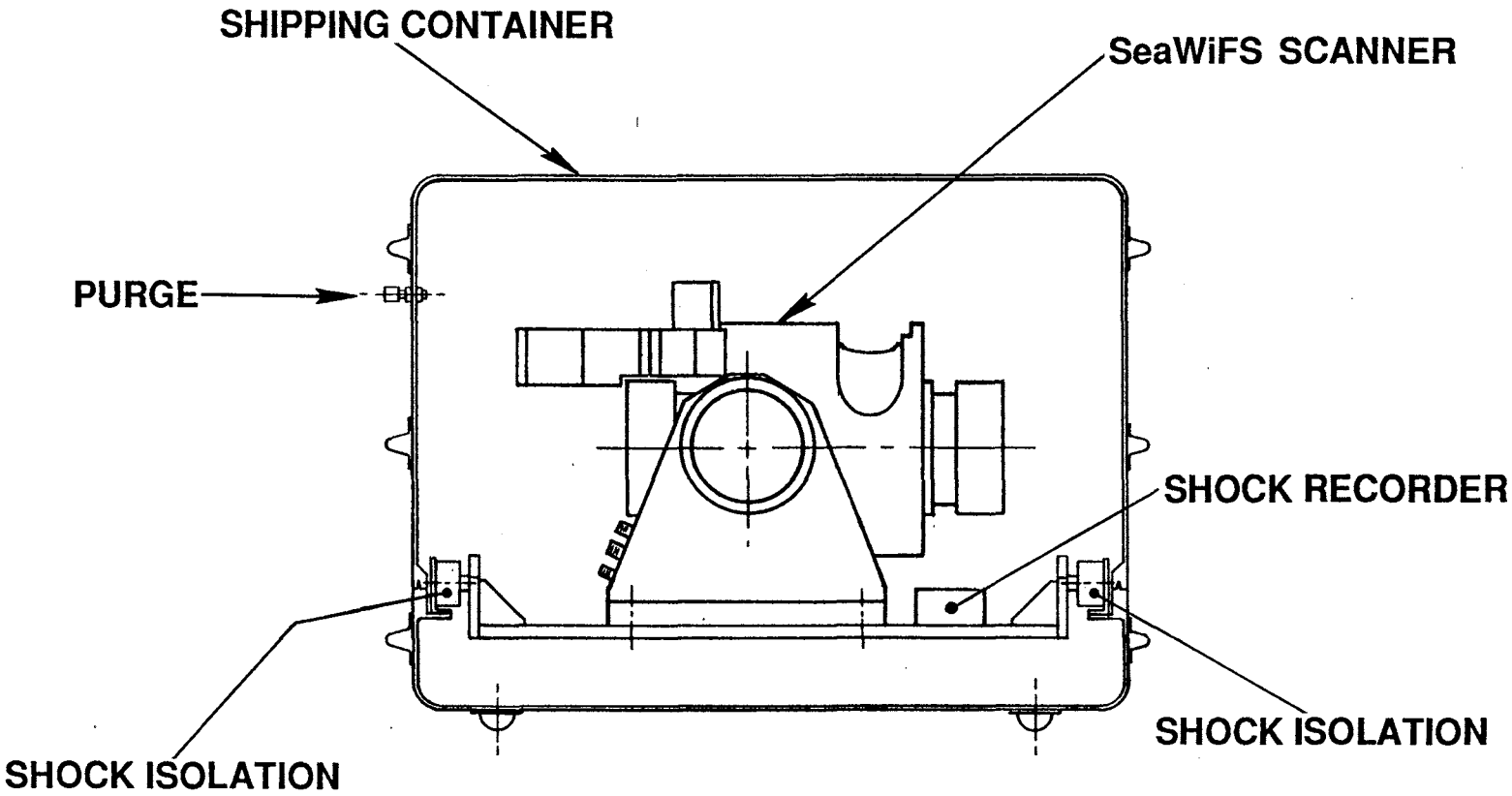

6/91
91-0441-156

SCANNER SIZE AND WEIGHT LIMITS ARE READILY ATTAINABLE

HUGHES

SANTA BARBARA RESEARCH CENTER
a subsidiary

- OVERALL SIZE 12 IN. × 15 IN. × 18 IN.
- NOT TO EXCEED ENVELOPE 22 IN. × 24 IN. × 25 IN.
- SPACECRAFT INTERFACE TO OPTICAL CENTERLINE 6.5 IN.
- NOT TO EXCEED WEIGHT 44.0 POUNDS INCLUDING ANGULAR MOMENTUM COMPENSATION
- ESTIMATED WEIGHTS

MOTORS	18.0
BASE ASSEMBLY	8.0
FOCAL PLANE ASSEMBLIES	0.5
HOUSINGS	5.5
LENSES	1.0
HARNESS, BLANKETS, ETC.	10.0
TOTAL	43.0 POUNDS

ELECTRONIC DESIGN

DAVE ROGERS

6/91
91-0441-166

STATUS

HUGHES

SANTA BARBARA RESEARCH CENTER
a subsidiary

- CURRENTLY IN DESIGN DEFINITION PHASE WORKING THE FOLLOWING ISSUES:
  - DET/PREAMP/POST AMP DESIGN
  - DISCRETE TDI DESIGN
  - CMD AND TELEMETRY DEFINITIONS
  - SERVO MECHANISM SELECTION
  - POWER REQUIREMENTS
  - POWER SUPPLY VENDOR SELECTION
  - PRELIMINARY TIMING REQUIREMENTS

GOAL: TO DEFINE INPUTS, OUTPUT, POWER AND DESIGN PERFORMANCE PARAMETERS FOR EACH BLOCK BY 8/3/91

ELECTRONICS DESIGN

HUGHES

SANTA BARBARA RESEARCH CENTER
a subsidiary

- VIDEO SIGNAL PATH
- SERVO CONTROLS
- COMMAND/TELEMETRY
- TIMING
- POWER AND GROUND
- TESTING

INSTRUMENT BLOCK DIAGRAM

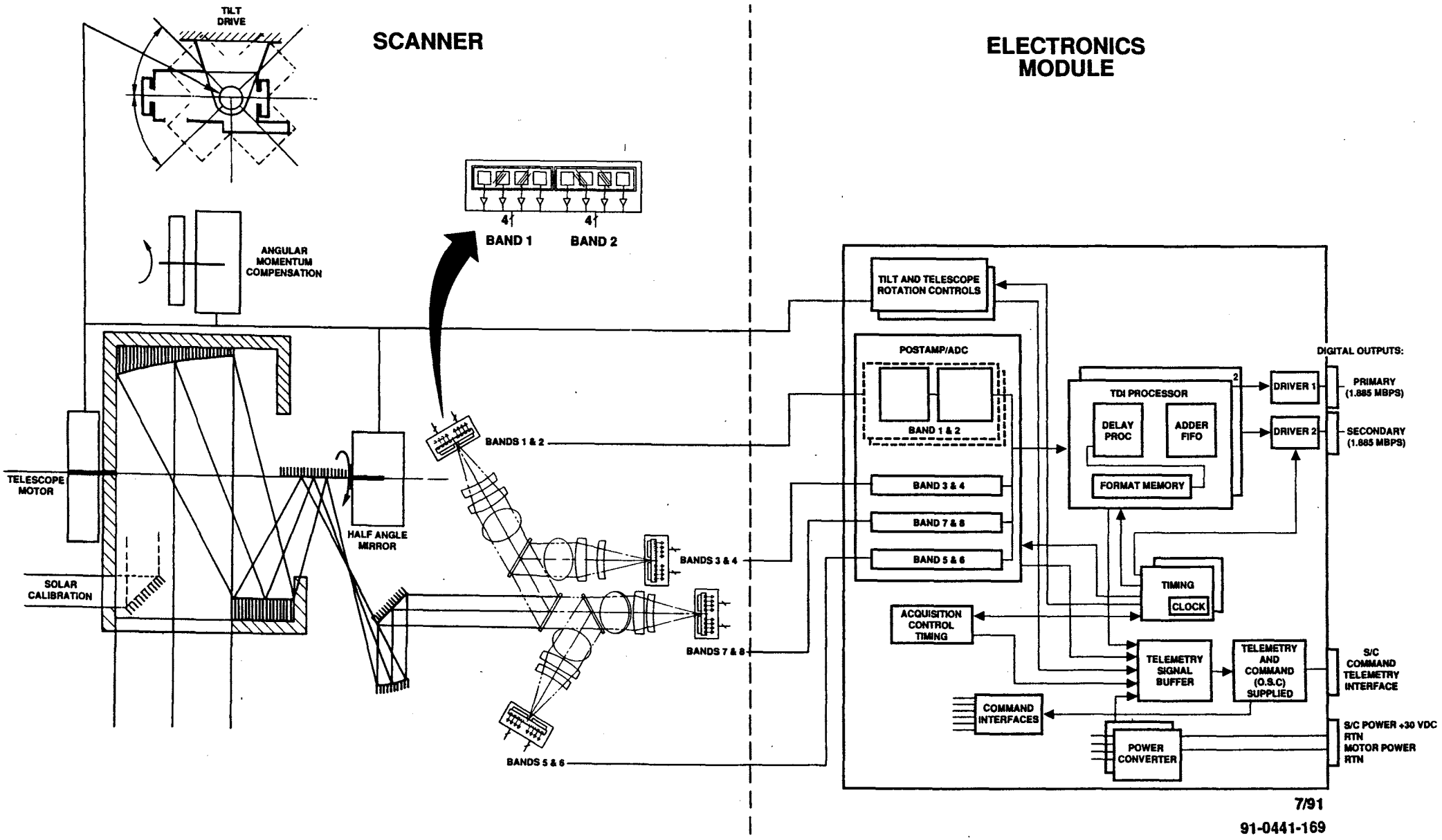

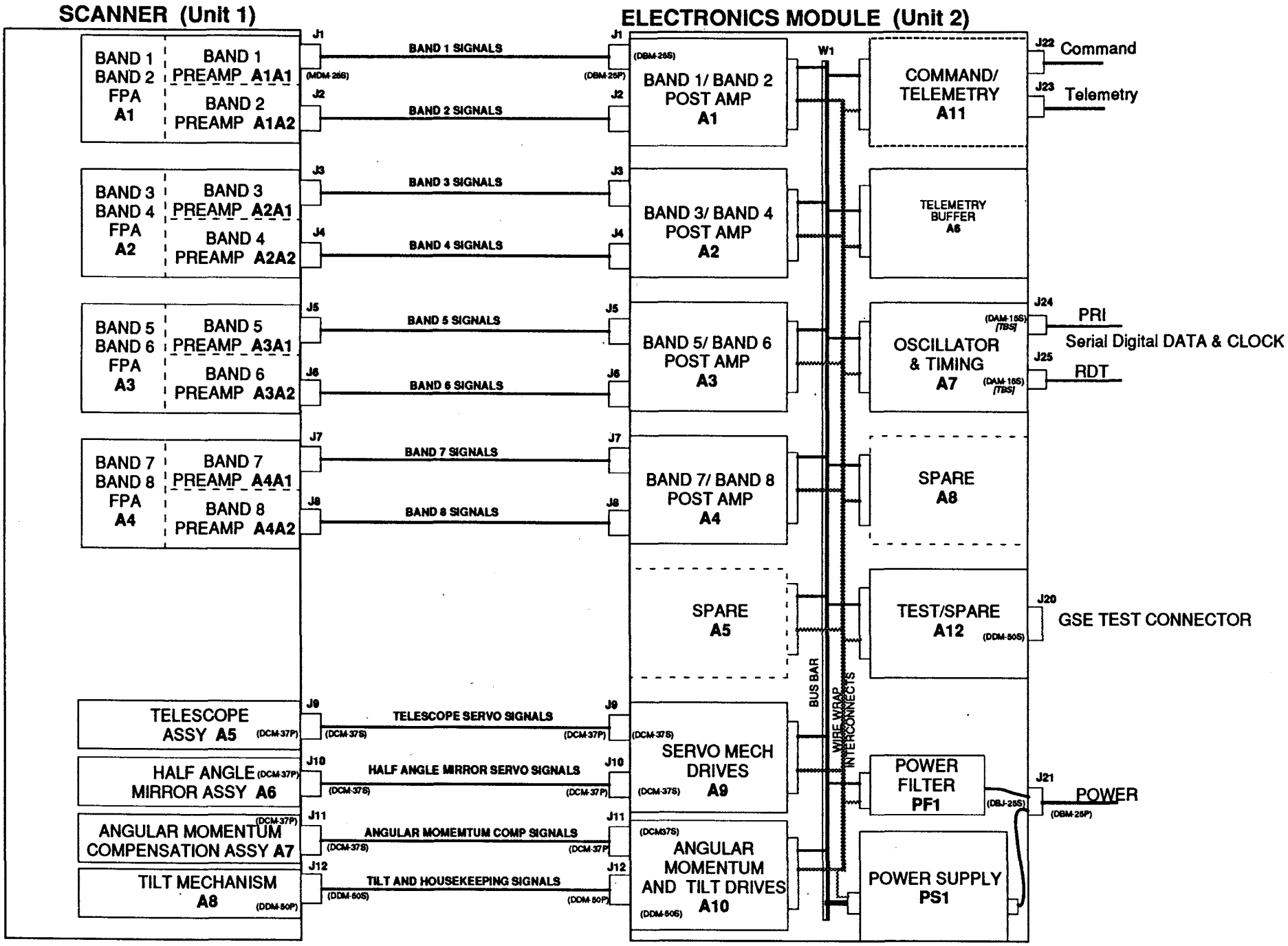

System Electronics Interconnect Diagram

DLR
6/27/91

7/91
91-0441-169A

VIDEO PERFORMANCE REQUIREMENTS

HUGHES

SANTA BARBARA RESEARCH CENTER
a subsidiary

PARAMETER	REQUIRED	EXPECTED	REMARKS
GAIN		X 40 (NOM)	AFTER 100 MΩ TIA STAGE
BANDWIDTH	11.8 kHz	11.8 kHz	3-POLE GOLDBERG – 3 dB
NOISE (SNR)	675:1	800:1	4:1 TDI, (~ 10 mV RMS, DARK)
CLOUD RECOVERY	0.5%, 10 PIXELS	0.5%, < 8 PIXELS	(0.5% OF STEP CHANGE)
POWER	8W	3W	SCANNER PD
A/D CONVERSION	10 BIT	12 BIT (INTERNAL)	(10 BIT AFTER TDI)
FULL SCALE	—	10V	
DC RESTORE	0.1% FS (10 DN)	10 DN (100 mV)	
SAMPLE PERIOD	42.4 μs	42.4 μs	A/D RATED AT 10 μs
TDI	4:1	4:1	4:1 OR ANY COMBINATION OF 1,2,3

VIDEO SIGNAL PATH

HUGHES

SANTA BARBARA RESEARCH CENTER
a subsidiary

- FOCAL PLANE ASSEMBLY
- SIGNAL CONDITIONING
- ANALOG TO DIGITAL CONVERSION
- DATA FORMATTING

VIDEO SIGNAL PATH

HUGHES
SANTA BARBARA RESEARCH CENTER
a subsidiary

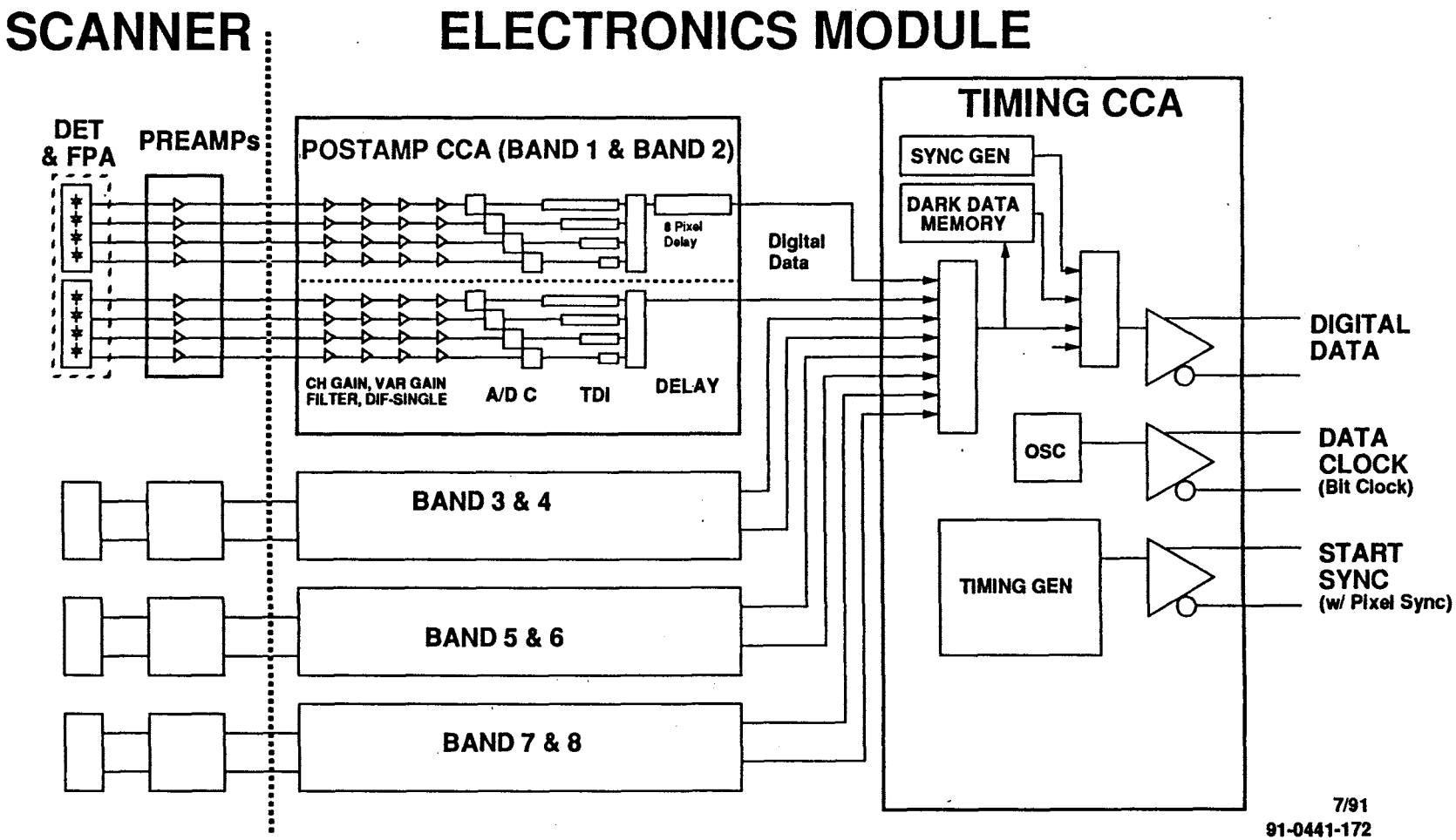

7/91
91-0441-172

FOCAL PLANE

BRAD PETERSON

7/91
91-0441-172A

ELECTRONICS DESIGN — SCANNER

HUGHES

SANTA BARBARA RESEARCH CENTER
a subsidiary

- FOCAL PLANE ASSEMBLY
  - DETECTOR ARRAYS
  - PREAMP ELECTRONICS
  - IMPLEMENTATION ISSUES

PARTITIONING OF DETECTOR/PREAMP ELECTRONICS: OPTIONS

HUGHES
SANTA BARBARA RESEARCH CENTER
a subsidiary

DUAL BAND FPA & PREAMP ASSEMBLY

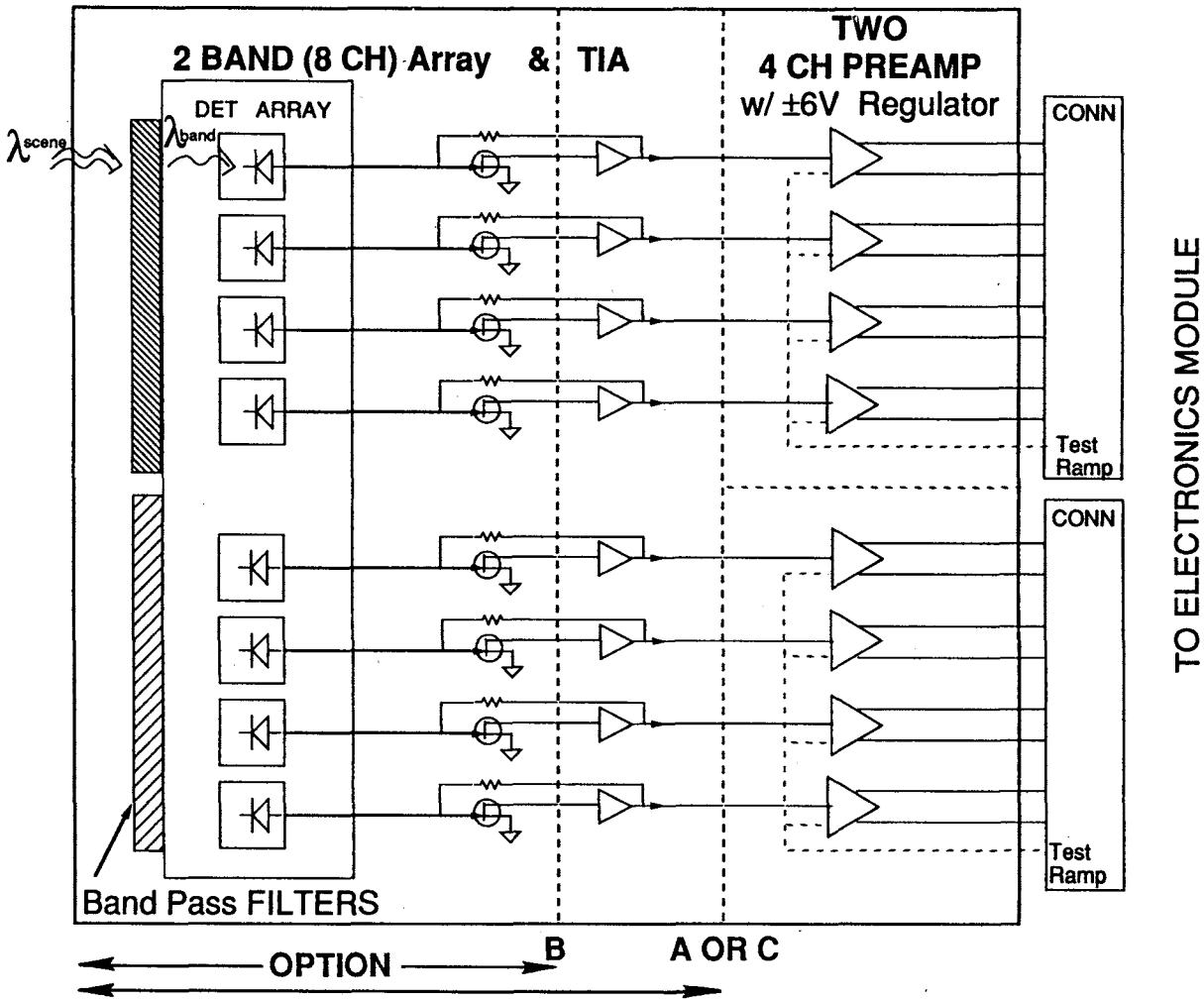

7/91
91-0441-177

PRELIMINARY DETECTOR AND PREAMP LAYOUTS

HUGHES

SANTA BARBARA RESEARCH CENTER
a subsidiary

OPTION A: CLOSES TIA FEEDBACK LOOP WITHIN PACKAGE

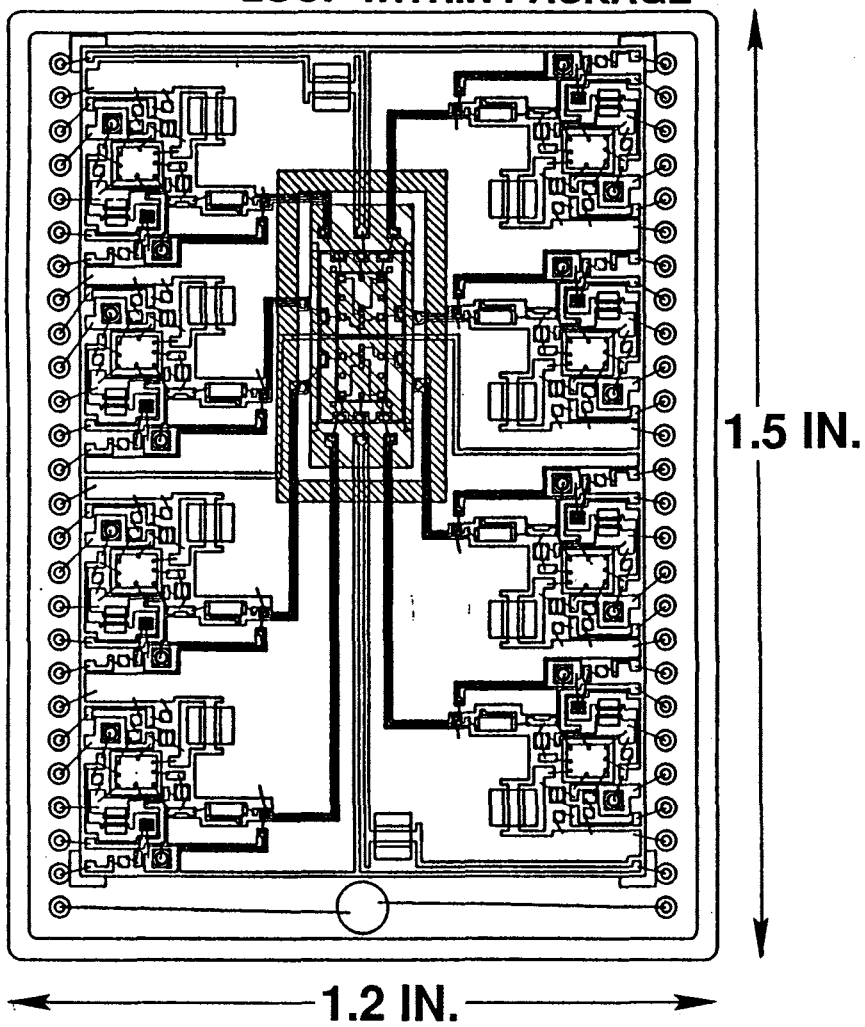

OPTION B: DETECTORS, FETs, AND LOAD RESISTORS ONLY

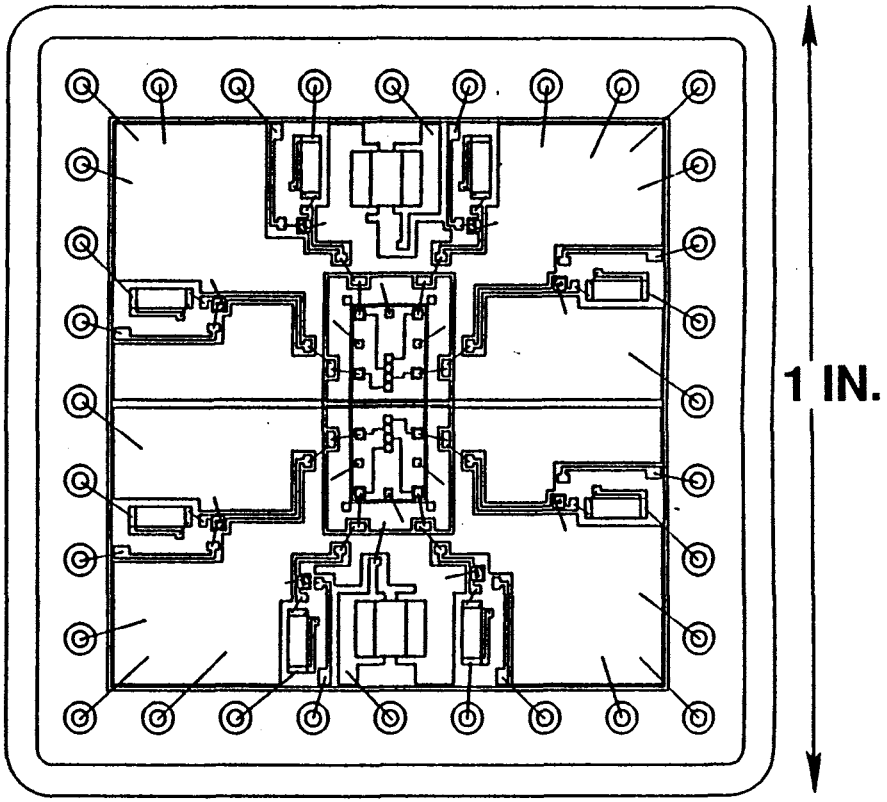

7/91
91-0441-178

SCANNER FPA — DETECTOR ARRAY STATUS

HUGHES

SANTA BARBARA RESEARCH CENTER
a subsidiary

- DETECTOR ARRAYS
  - LAYOUT DETERMINED: IN-LINE, 8 DETECTORS (2 BANDS, 4 CHANNELS EACH)
  - PROCUREMENT SPECIFICATION IN RELEASE CYCLE
    - BASED ON GMS-5 SINGLE DETECTOR PROCUREMENT SPECIFICATION
    - EXPECT PARTS TO EASILY MEET SPECTRAL RESPONSIVITY REQUIREMENTS
    - ONLY "NEW" REQUIREMENT: ADJACENT AND NONADJACENT CHANNEL CROSSTALK
  - EXPECTED DELIVERY:
    - FLIGHT PARTS IN ~ 6 MONTHS (ARO)
  - ARRAY MOUNTED TO SEPARATE SUBSTRATE AND CUT TO ISOLATE BANDS
  - DETECTOR ARRAY/SUBSTRATE, FETs AND FEEDBACK RESISTORS ON COMMON SUBSTRATE AT A MINIMUM

PREAMP DESIGN STATUS

HUGHES
SANTA BARBARA RESEARCH CENTER
a subsidiary

- BREADBOARD FOCAL PLANE ASSEMBLY (FPA) READY FOR TEST BY 22 JULY 1991
- PRELIMINARY PREAMP DESIGN COMPLETE
  - SCHEMATIC IN REVIEW CYCLE
  - DISCRETE BREADBOARD CIRCUIT TESTING IN PROGRESS
- DISCRETE VERSUS SMD VERSUS HYBRID PACKAGING TRADEOFFS:
  - DISCRETE OR SMD EASIER TO PROCURE, EASIER TO MODIFY DESIGN
  - HYBRID MAKES SCANNER PACKAGING EASIER
- DESIGN MAINTAINS BAND POWER AND GROUND ISOLATION AND ISOLATES ODD/EVEN CHANNEL POWER TO IMPROVE RELIABILITY

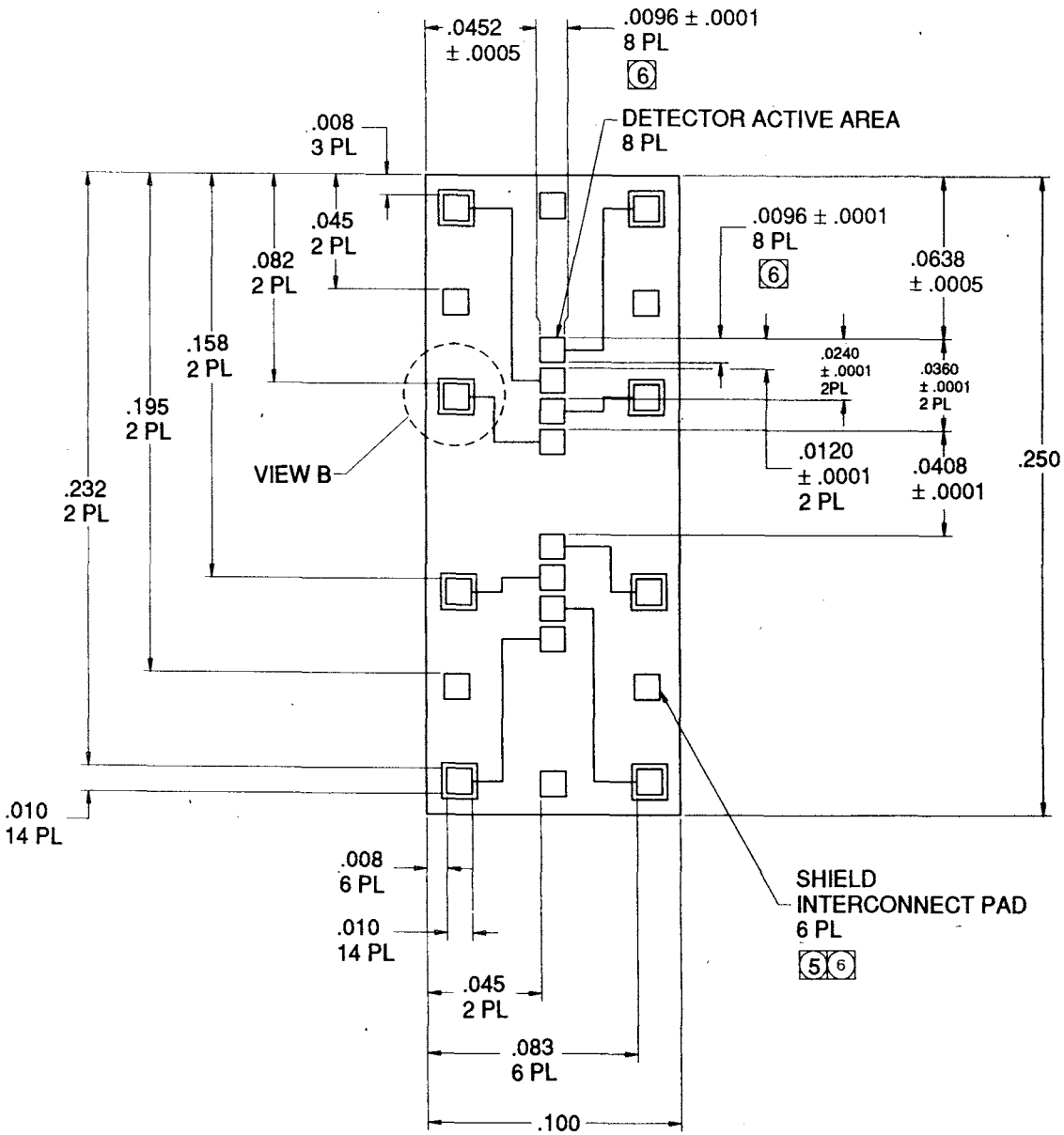

HUGHES

SANTA BARBARA RESEARCH CENTER
a subsidiary

DETECTOR ARRAY CONFIGURATION

7/91
91-0441-180A

MARGIN EXPECTED FOR KEY DETECTOR PERFORMANCE PARAMETERS

HUGHES

SANTA BARBARA RESEARCH CENTER
a subsidiary

	SPECIFICATION	EXPECTED*
RESPONSIVITY (A/W)		
400 NM	0.19	0.21
500 NM	0.29	0.32
600 NM	0.37	0.41
700 NM	0.45	0.50
800 NM	0.51	0.56
900 NM	0.52	0.57
DARK CURRENT (25°C)	40 PA	25 PA

*BASED ON ETM AND GMS-5 DATA

PRELIMINARY Si FPA ELECTRONICS DIAGRAM: PREAMP BASED ON GMS DESIGN

HUGHES
SANTA BARBARA RESEARCH CENTER
a subsidiary

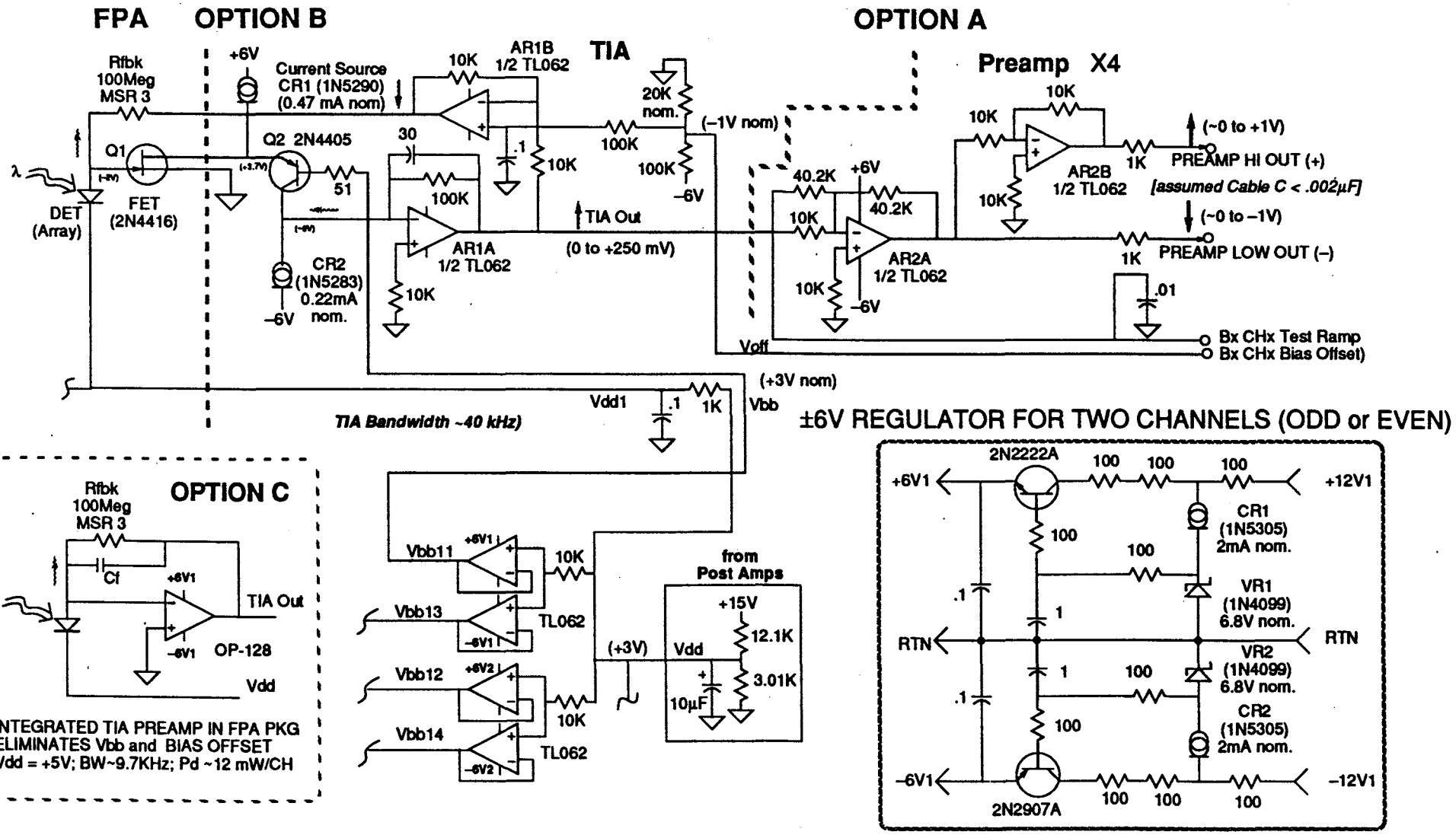

7/91
91-0441-174

NOISE ANALYSIS: FEEDBACK RESISTOR DOMINATES NOISE

HUGHES

SANTA BARBARA RESEARCH CENTER
a subsidiary

- INPUT CAPACITANCE AND INPUT VOLTAGE NOISE ARE NOT CRUCIAL TO SeaWiFS PERFORMANCE
- EXPLOIT THESE PARAMETERS TO REDUCE COST AND MINIMIZE RISK

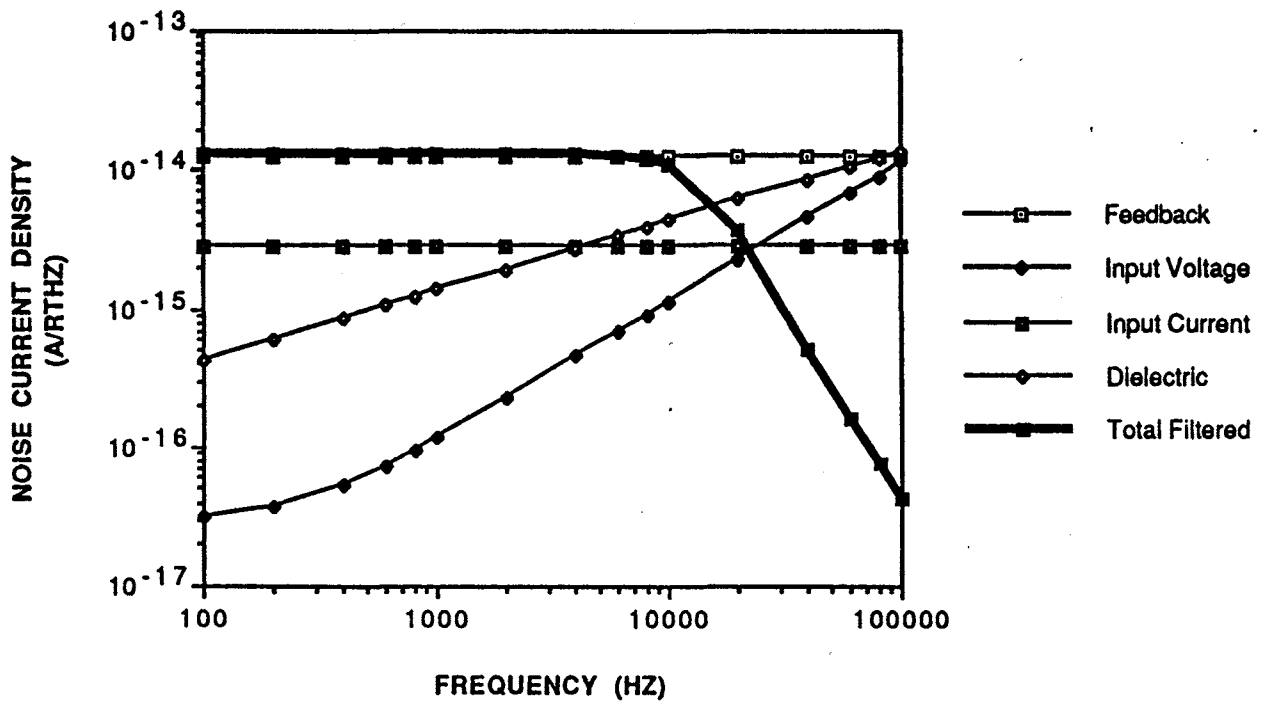

791
91-0441-175

ESTIMATED PEAK VOLTAGES AFTER FIRST STAGE

HUGHES

SANTA BARBARA RESEARCH CENTER
a subsidiary

1/2 Differential PREAMP OUTPUT (TIA x 4)						PREAMP NOISE* BW=11.8KHz
BAND	Preamp Max (FS)	Preamp TYPICAL	LUNAR Scene	Solar Cal Max	CLOUD Lmax	
1	0.96 V	0.64 V	0.31 V	0.40 V	3.94 V	1.15E-03 V
2	1.10 V	0.70 V	0.43 V	0.50 V	*4.98 V*	1.19E-03 V
3	1.28 V	0.80 V	0.74 V	0.76 V	**7.60 V**	1.26E-03 V
4	1.18 V	0.73 V	0.81 V	0.78 V	**7.84 V**	1.21E-03 V
5	1.06 V	0.65 V	0.94 V	0.79 V	**7.93 V**	1.16E-03 V
6	0.79 V	0.48 V	1.33 V	0.87 V	**8.70 V**	1.05E-03 V
7	0.83 V	0.44 V	1.78 V	1.05 V	**10.51 V**	1.02E-03 V
8	0.82 V	0.42 V	2.02 V	1.18 V	**11.80 V**	9.99E-04 V

Voltages greater than 5.5V saturate Preamp Outputs

Voltages exceeding 4.5V risk Clipping or distortion

Max (FS) is Preamp Output causing Full Scale Digital output for Typical (X1) Postamp Gain

* NOISE includes shot noise for TYPICAl Signal levels shown

SCANNER FPA DESIGN ADDRESSES EMI/RADIATION ISSUES

HUGHES

SANTA BARBARA RESEARCH CENTER
a subsidiary

- EMI
  - WILL USE LABYRINTH JOINTS ON HOUSING
  - MINIMIZE LOW LEVEL TRACE LENGTHS AND SIGNAL/GROUND TRACE LOOPS
  - WILL TEST BREADBOARDS AND ENGINEERING MODEL MOCK-UP
    - E-FIELD PICK-UP
    - M-FIELD PICK UP
- RADIATION (DESIGN RADIATION MARGIN (DRM) $\geq$ 2)
  - 100 mil Al COVERS TO REDUCE ENVIRONMENT TO <25 Krad(Si) (5 YEAR)
  - ADDITIONAL SHIELDING OF COMPONENTS FOUND TO BE SENSITIVE < 50 Krad(Si)
  - WILL TEST ENGINEERING MODEL ARRAY AND PREAMP CIRCUIT TO >100 Krad(Si)

SCANNER FPA CAN BE REPAIRED AFTER ASSEMBLY

HUGHES

SANTA BARBARA RESEARCH CENTER
a subsidiary

- REPAIRABILITY
  - DETECTORS
    - FULLY TESTED PRIOR TO ADDING SPECTRAL BAND FILTERS
    - FILTERS REPLACEABLE WITH MINIMAL RISK TO FPA ASSEMBLY
    - EXTRA ASSEMBLIES WILL BE SCREENED AND MAINTAINED AS SPARES
  - PREAMPS
    - IF HYBRID, ONE PER BAND, THEN UNSOLDER AND REPLACE; FULLY TESTED, INTERCHANGEABLE BETWEEN ALL 8 BANDS
    - IF DISCRETE, THEN REPLACE COMPONENTS OR ENTIRE PWB; ONE 4 CH PWB PER BAND, BAND INTERCHANGEABLE
  - FPA ASSEMBLY
    - PREAMPS PARTIALLY ACCESSIBLE WITHOUT DISTURBING DETECTOR ARRAY
    - ACCESSIBLE FOR ADJUSTMENT AND REPLACEMENT WITHOUT MAJOR DISASSEMBLY OF SCANNER (REMOVE ONE COVER)

POSTAMPLIFIERS AND SIGNAL CONDITIONING

DAVE ROGERS

7/91
91-0441-182A

VIDEO ELECTRONICS POSTAMP BASED ON ETM DESIGN

HUGHES

SANTA BARBARA RESEARCH CENTER
a subsidiary

- POST AMP DESIGN STATUS
  - PRELIMINARY DESIGN COMPLETE
  - BASED ON ETM HYBRID DESIGN
  - PROVIDES CHANNEL GAIN ADJUST
  - PROVIDES FOUR SELECTABLE GAIN SETTINGS
  - PROVIDES 3 POLES GOLDBERG FILTER (<2% OVERSHOOT)
  - PERFORMS DC RESTORE AROUND DIFF-SINGLE STAGE
  - PROPOSED DESIGN SEPARATES POWER TO ISOLATE ODD AND EVEN CHANNELS TO IMPROVE RELIABILITY
- PWB (1/2 CCA)
  - EACH POST AMP/TDI PWB TO CONTAIN FOUR POST AMP CHANNELS FOR ONE BAND
  - S/H AND A/D CONVERTORS
  - TDI ELECTRONICS
  - BAND POWER RELAYS AND ±12V REGULATORS

POSTAMP A/D & TDI CONCEPT AND ALTERNATE

HUGHES
SANTA BARBARA RESEARCH CENTER
a subsidiary

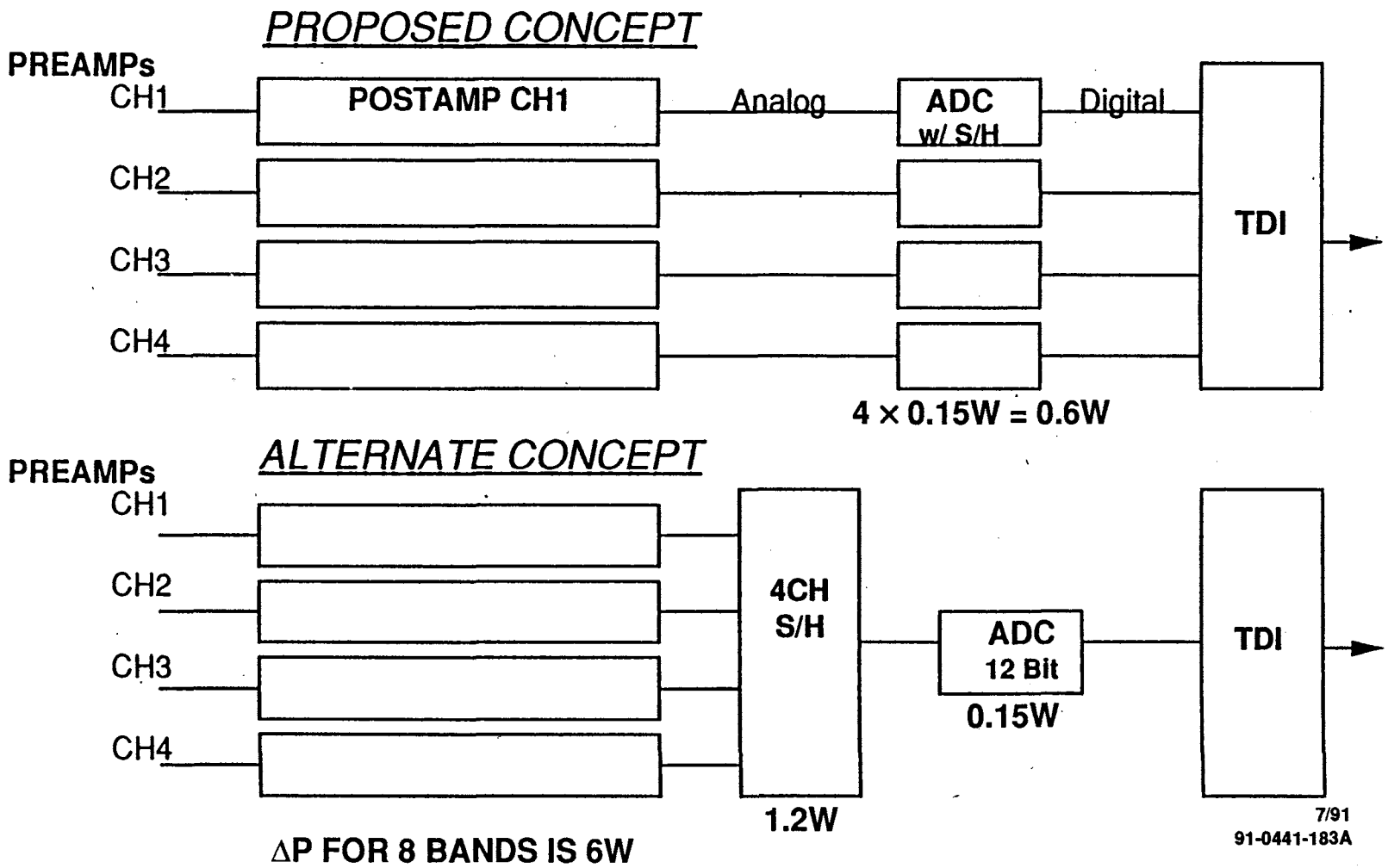

7/91
91-0441-183A

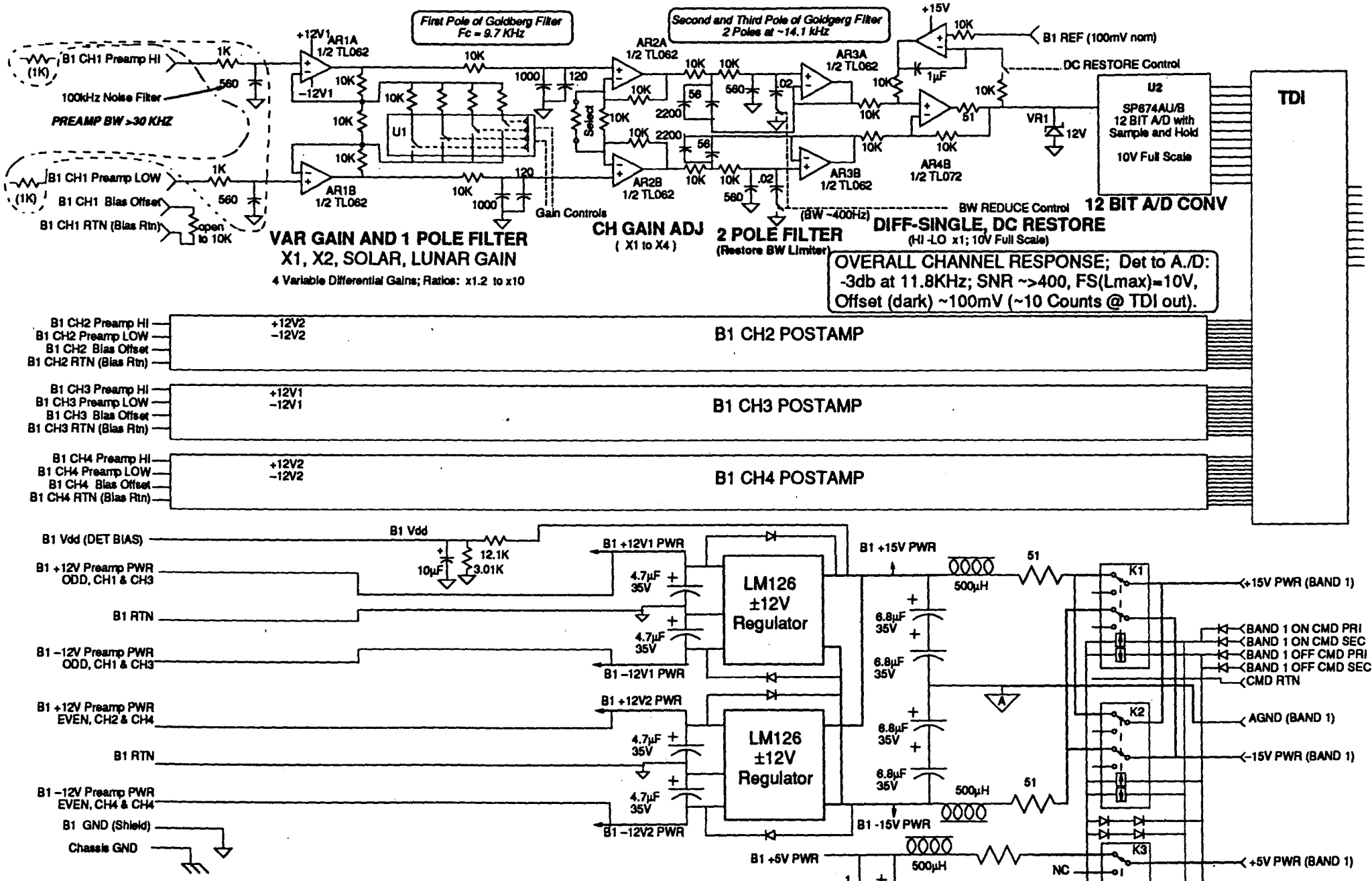

POST AMP ELECTRONICS USES PROVEN ETM DESIGN

7/91
91-0441-184

PRELIMINARY BAND (4 CHANNEL) POST AMP AND TDI LAYOUT

HUGHES

SANTA BARBARA RESEARCH CENTER
a subsidiary

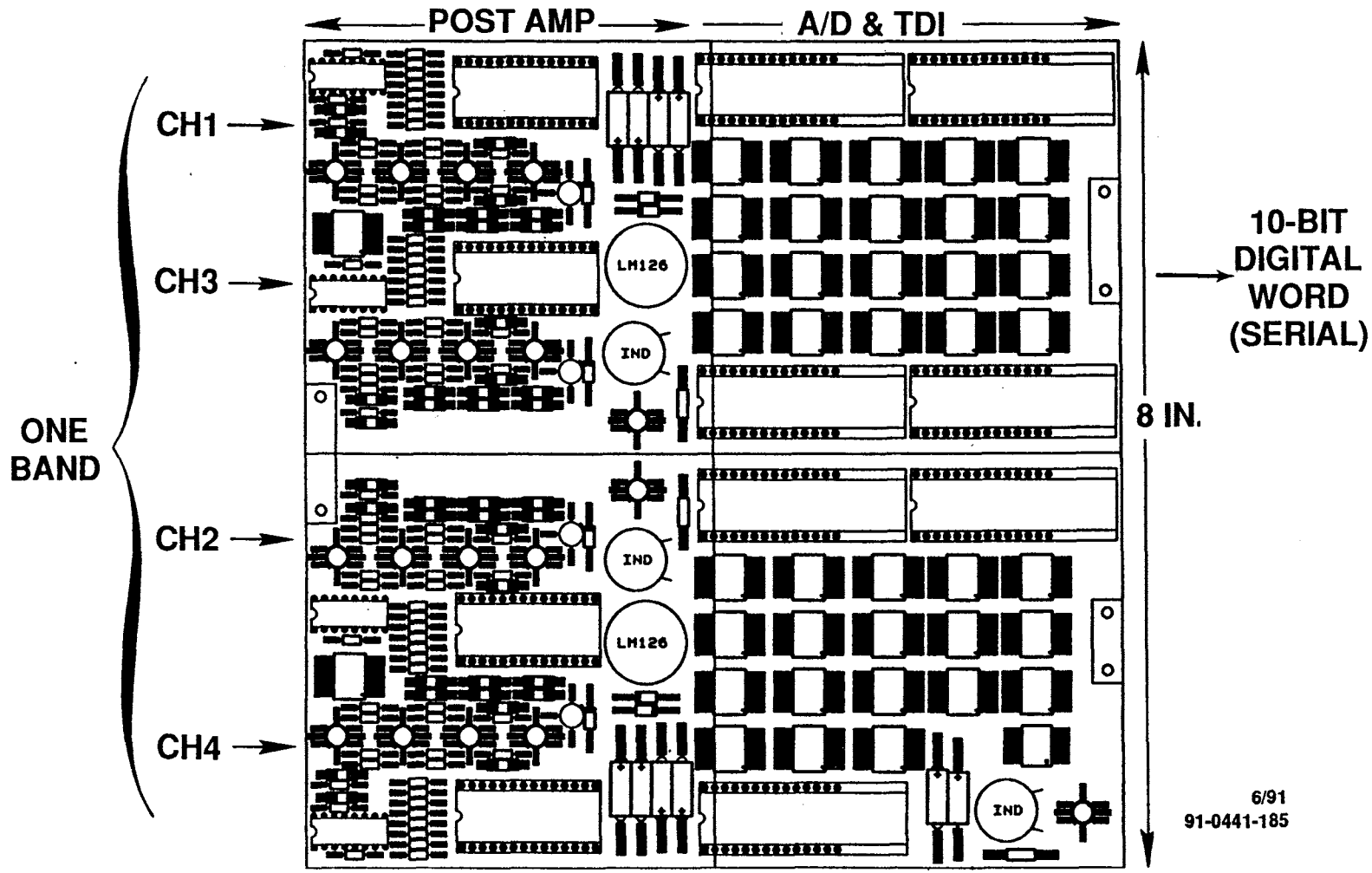

6/91
91-0441-185

PRELIMINARY POSTAMP SCHEMATIC SHOWS CHANNEL GAIN, VAR GAIN, AND DC RESTORE

HUGHES
SANTA BARBARA RESEARCH CENTER
a subsidiary

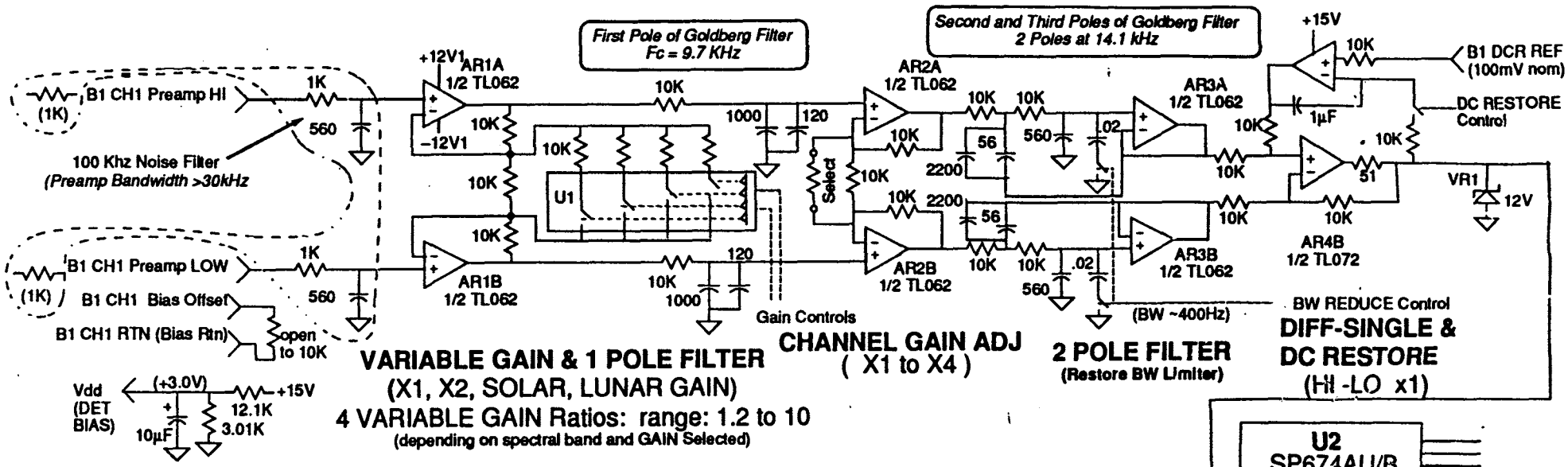

7/91
91-0441-136A

IDEAL 3-POLE GOLDBERG FILTER RESPONSE

HUGHES

SANTA BARBARA RESEARCH CENTER
a subsidiary

OPTIMIZES STEP RESPONSE WHILE MINIMIZING OVERSHOOT

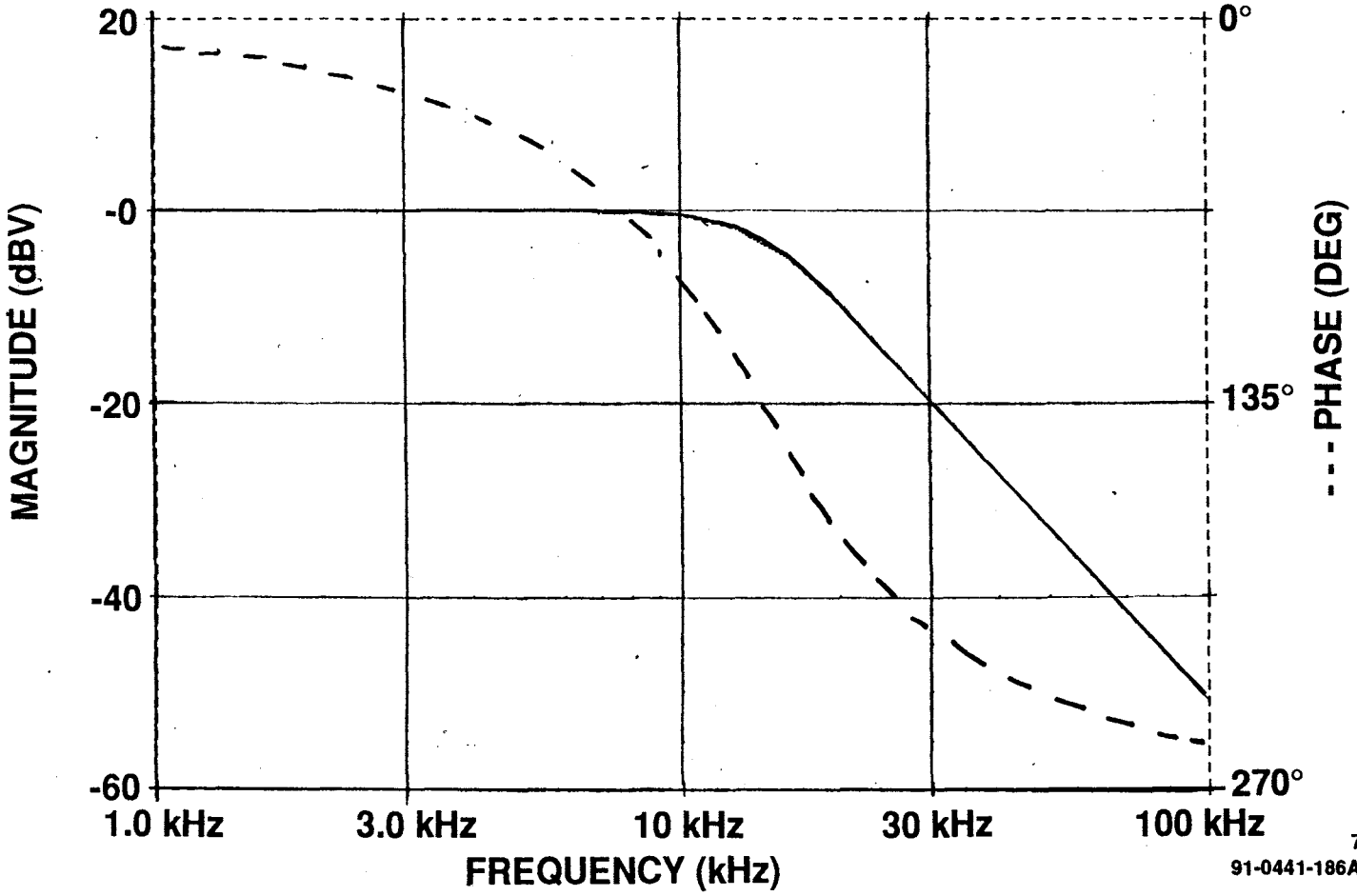

7/91
91-0441-186AAA

POST AMP BAND GAINS

HUGHES

SANTA BARBARA RESEARCH CENTER
a subsidiary

BAND	Preamp Gain (after TIA)	Calculated Channel Adjust and Variable Gain Factors					
		Postamp Gain	CH Gain Adjust	Postamp Var. Gain Factors			
				UNITY	X2	Solar	Lunar
1	8.00	5.21	1.56	3.33	6.67	3.00	8.00
2	8.00	4.53	1.36	3.33	6.67	2.76	5.57
3	8.00	3.89	1.17	3.33	6.67	2.54	4.53
4	8.00	4.25	1.28	3.33	6.67	2.33	3.50
5	8.00	4.72	1.42	3.33	6.67	2.14	2.67
6	8.00	6.35	1.90	3.33	6.67	1.97	1.43
7	8.00	6.04	1.51	4.00	8.00	2.18	1.28
8	8.00	6.07	1.21	5.00	10.00	2.50	1.20

Postamp Gain Raises Preamp Max Scene Signal to 10V Full Scale (Differential) at A/D input

CH Gain Adjust trims Channels within a Band for Detector/Preamp Variations

CH Gain values shown trim Bands for ~1.5V before Variable Gain except Band 7 & 8.

Band 7 & 8 CH Gains Adjust was reduced to keep nominal Var Gain for Lunar signals ≥1.2.

TDI BLOCK DIAGRAM USES DISCRETE ELECTRONICS

HUGHES
SANTA BARBARA RESEARCH CENTER
a subsidiary

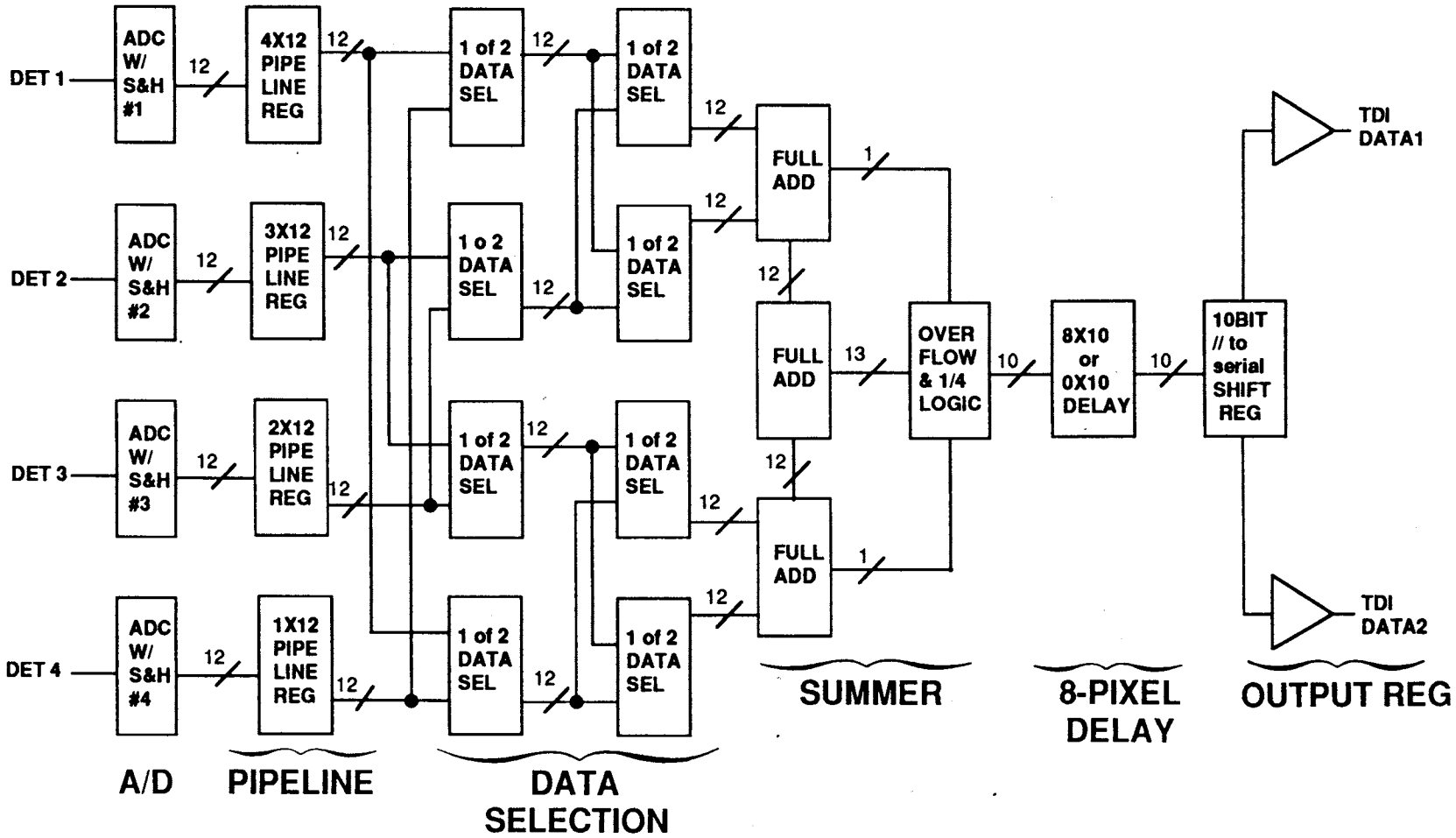

TDI ADDER Always adds 4 12 Bit values and selects 10 MSB's

7/91
91-0441-188

A/D CONVERTER ISSUES

HUGHES

SANTA BARBARA RESEARCH CENTER
a subsidiary

- 12 BIT A/D
- SPEED: 10 μS/CONVERSION
- CANDIDATES: SP 674 (SIPEX)
- POWER: 150 mW
- QUANTITY: 4 PER BAND, 32 PER SYSTEM

DETECTOR IFOV GROUND LOCATIONS AT A/D CONVERSION TIMES

HUGHES

SANTA BARBARA RESEARCH CENTER
a subsidiary

Sampling at 1/4 Pixel Intervals gives Contiguous Digital Data Values

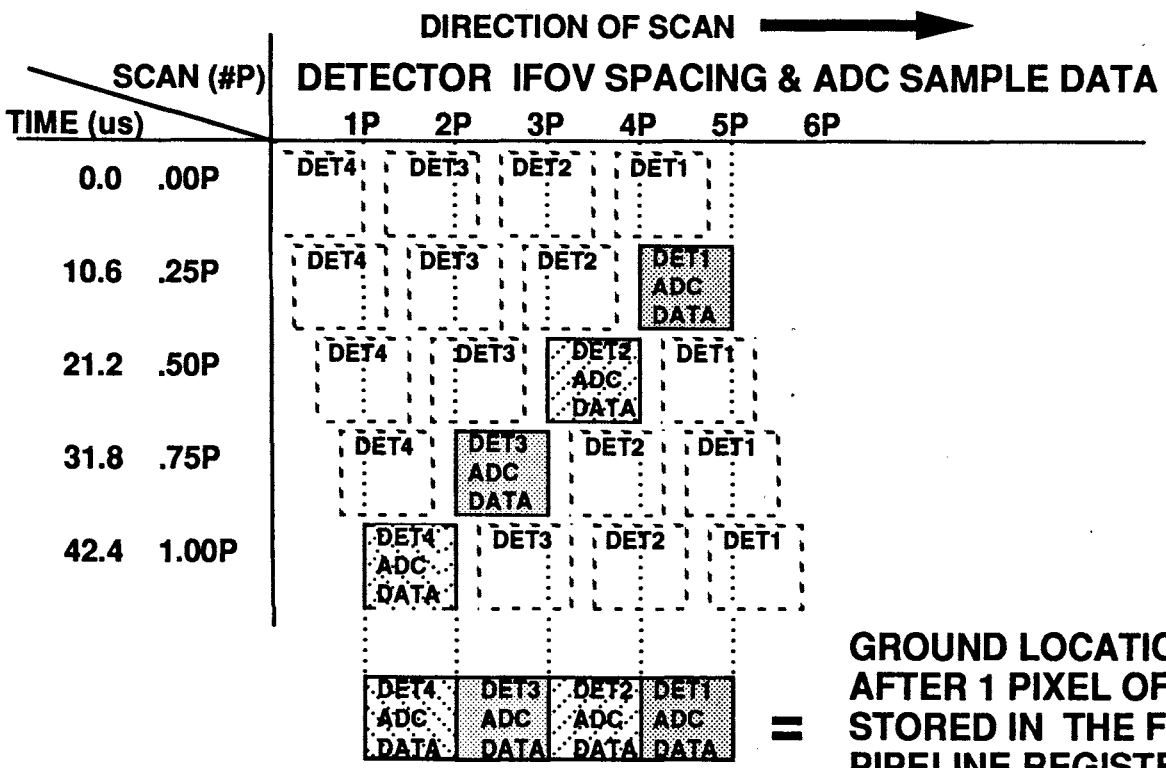

= GROUND LOCATION OF DIGITAL DATA AFTER 1 PIXEL OF TIME. DATA IS STORED IN THE FIRST STAGE OF TDI PIPELINE REGISTERS

7/91
91-0441-187A

TDI DATA LOCATIONS

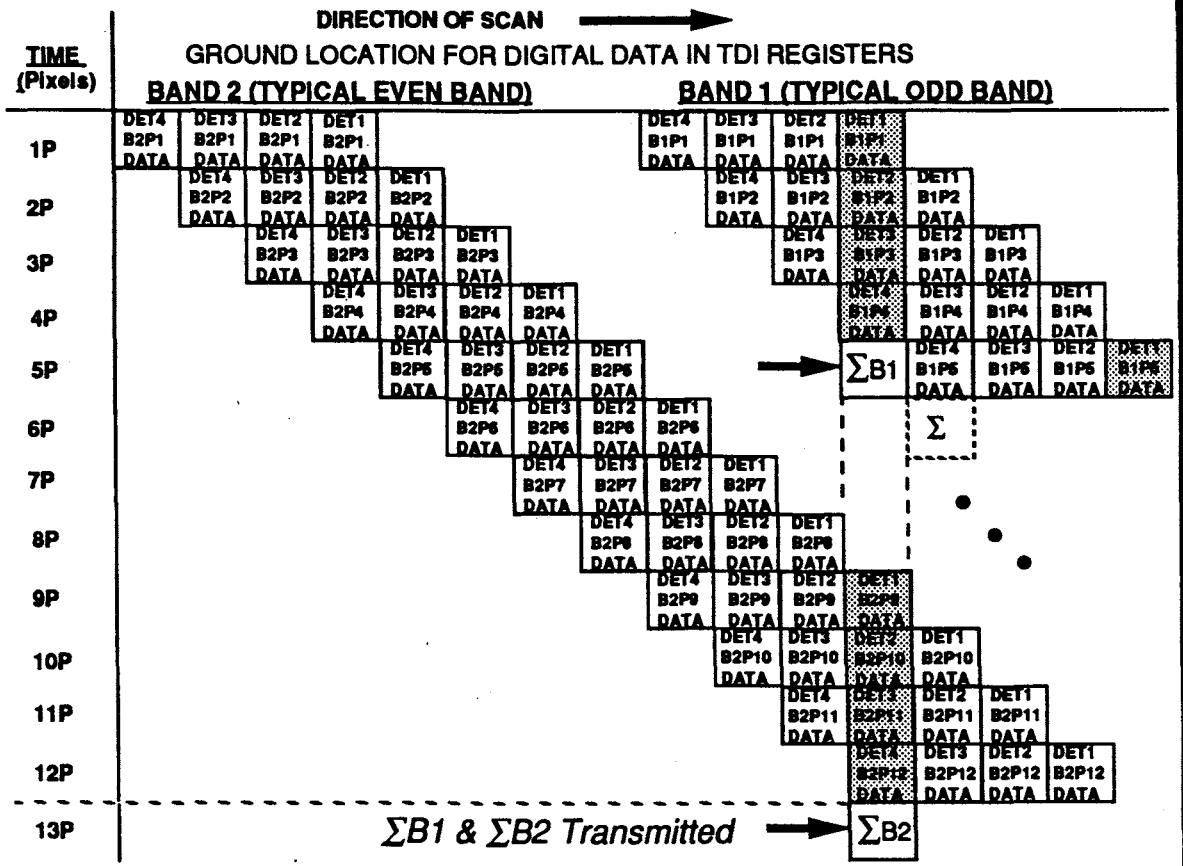

The First Valid 4:1 TDI occurs twelve Pixels after resynchronization for each pair of bands. Formulas for the same co- registered ground location are shown below:

ΣB1 TDI = (Det1, B1P1 + Det2, B1P2 + Det3, B1P3 + Det4, B1P4) /4

and the ΣB2 TDI = (Det1, B2P9 + Det2, B2P10 + Det3, B2P11 + Det4, B2P12) /4

HUGHES

SANTA BARBARA RESEARCH CENTER
a subsidiary

TDI REGISTRATION DIAGRAM

1 to 4 Pixel Pipeline Delay generates 4:1 TDI Sum of same ground location per Band

Delaying Band 1's TDI Sum with 8 Pixel Pipeline Delay co-registers Band 1 values with Band 2 Values

7/91
91-0441-186AA

TDI FORMULAS
4:1, 3:1, 2:1, AND 1:1

HUGHES

SANTA BARBARA RESEARCH CENTER
a subsidiary

TDI formulas add detector pixels for the same ground location:

TYPE	ODD BAND	EVEN BAND
4:1	(Det1, B#P1 + Det2, B#P2 + Det3, B#P3 + Det4, B#P4) /4	(Det1, B#P9 + Det2, B#P10 + Det3, B#P11 + Det4, B#P12) /4
3:1	(Det2, B#P2 + Det2, B#P2 + Det3, B#P3 + Det4, B#P4) /4	(Det1, B#P9 + Det1, B#P9 + Det3, B#P11 + Det4, B#P12) /4
3:1	(Det1, B#P1+ Det2, B#P2 + Det3, B#P3 + Det3, B#P3) /4	(Det1, B#P9 + Det2, B#P10 + Det4, B#P12 + Det4, B#P12) /4
2:1	(Det3, B#P3 + Det4, B#P4 + Det3, B#P3 + Det4, B#P4) /4	(Det2, B#P10 + Det2, B#P10 + Det4, B#P12 + Det4, B#P12) /4
2:1	(Det2, B#P2 + Det3, B#P3 + Det3, B#P3 + Det2, B#P2) /4	(Det1, B#P9 + Det1, B#P9 + Det4, B#P12 + Det4, B#P12) /4
2:1	(Det1, B#P1 + Det1, B#P1 + Det3, B#P3 + Det3, B#P3) /4	(Det1, B#P9 + Det2, B#P10 + Det1, B#P9 + Det2, B#P10) /4
1:1	(Det1, B#P1 + Det1, B#P1 + Det1, B#P1 + Det1, B#P1) /4	(Det2, B#P10 + Det2, B#P10 + Det2, B#P10 + Det2, B#P10) /4
1:1	(Det3, B#P3 + Det3, B#P3 + Det3, B#P3 + Det3, B#P3) /4	(Det4, B#P12 + Det4, B#P12 + Det4, B#P12 + Det4, B#P12) /4

Formulas shown are a subset of those selectable by command coding (6 bits).
64 formulas are possible for each band, all of which will yield good data.
The formulas can be mixed and matched between the bands;
(i.e., the same formula does not have to be used for all of the bands.)
An all 1's code and all 0's code select 4:1 TDI mode.

DIGITAL VIDEO ELECTRONICS FORMATTING AND DATA TRANSMISSION

HUGHES

SANTA BARBARA RESEARCH CENTER
a subsidiary

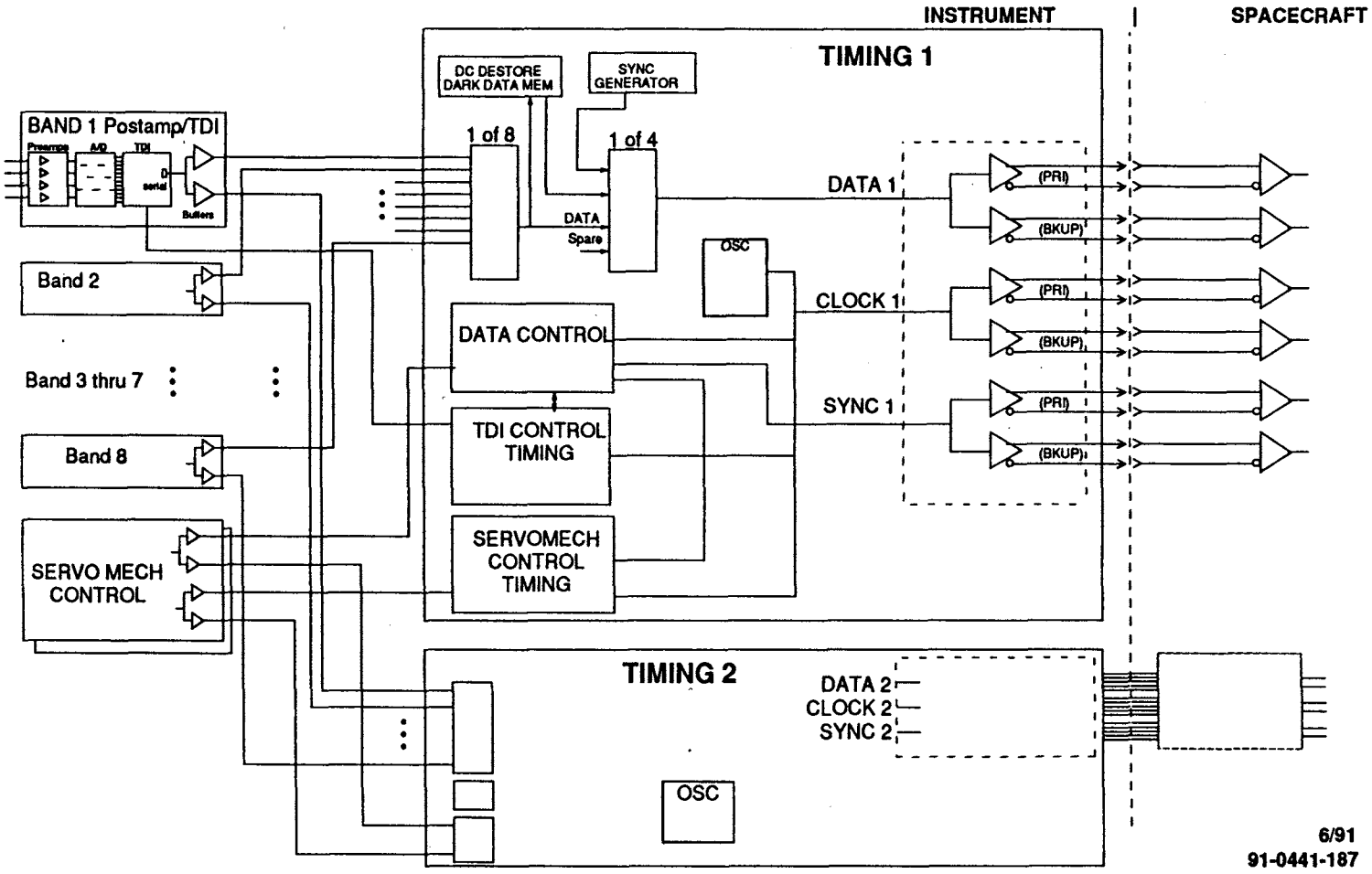

6/91
91-0441-187

VIDEO DATA FORMAT

HUGHES
SANTA BARBARA RESEARCH CENTER
a subsidiary

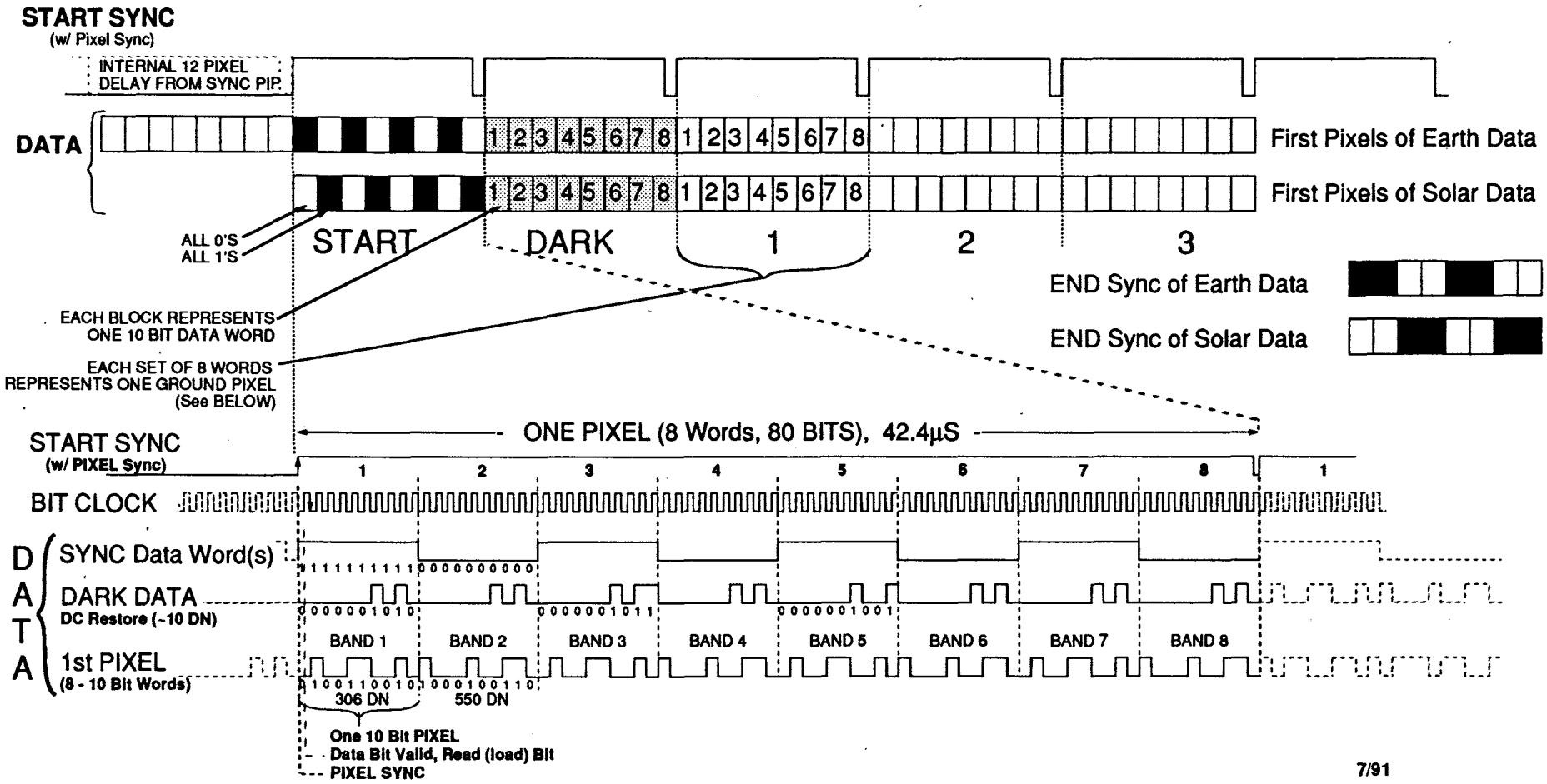

7/91
91-0441-189

PRELIMINARY SCANNER APERTURE AND POINTING ANGLES

HUGHES

SANTA BARBARA RESEARCH CENTER
a subsidiary

Solid Lines: Aperture Limits (Earth, Solar & Telescope)
Dotted Lines: Telescope Pointing Angles

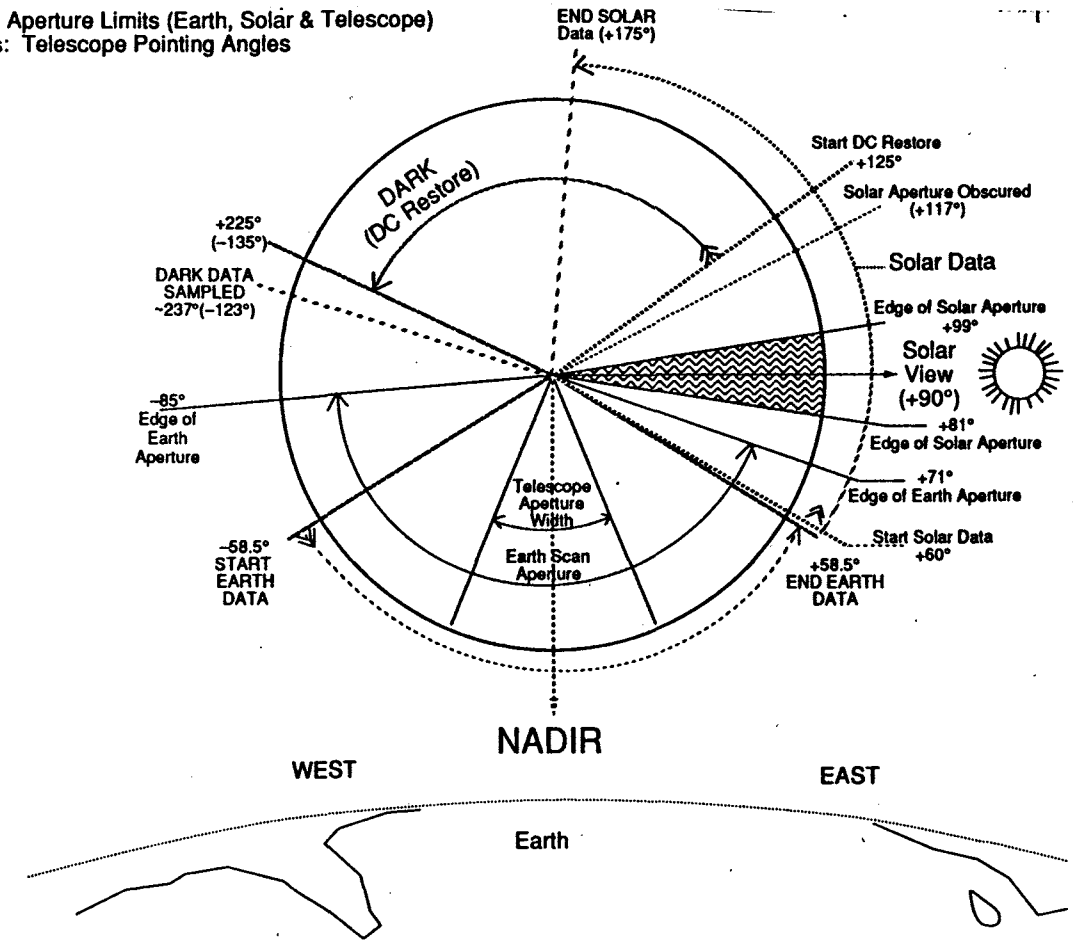

6/91
91-0441-190

VIDEO DATA TIMING DIAGRAM

HUGHES

SANTA BARBARA RESEARCH CENTER
a subsidiary

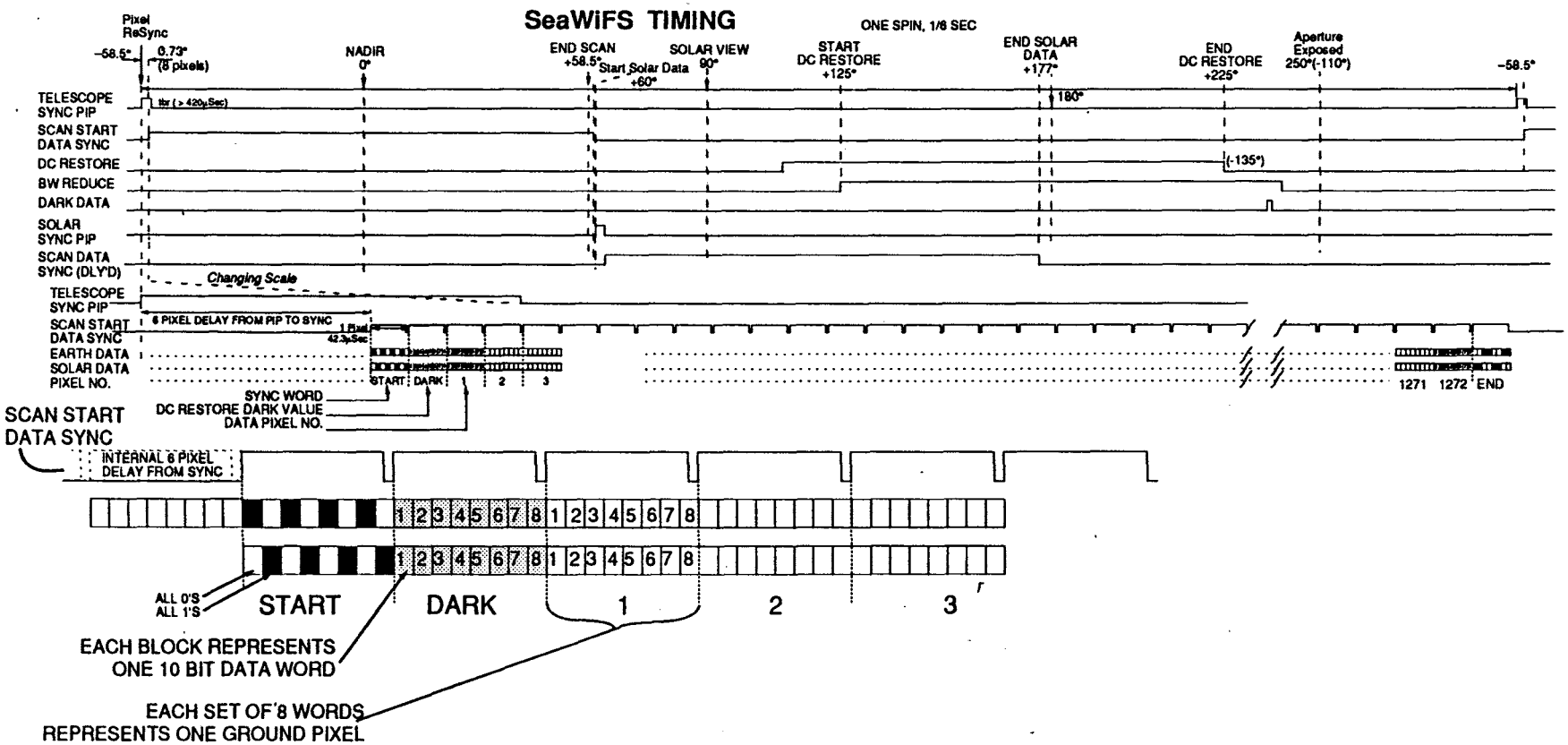

6/91
91-0441-191

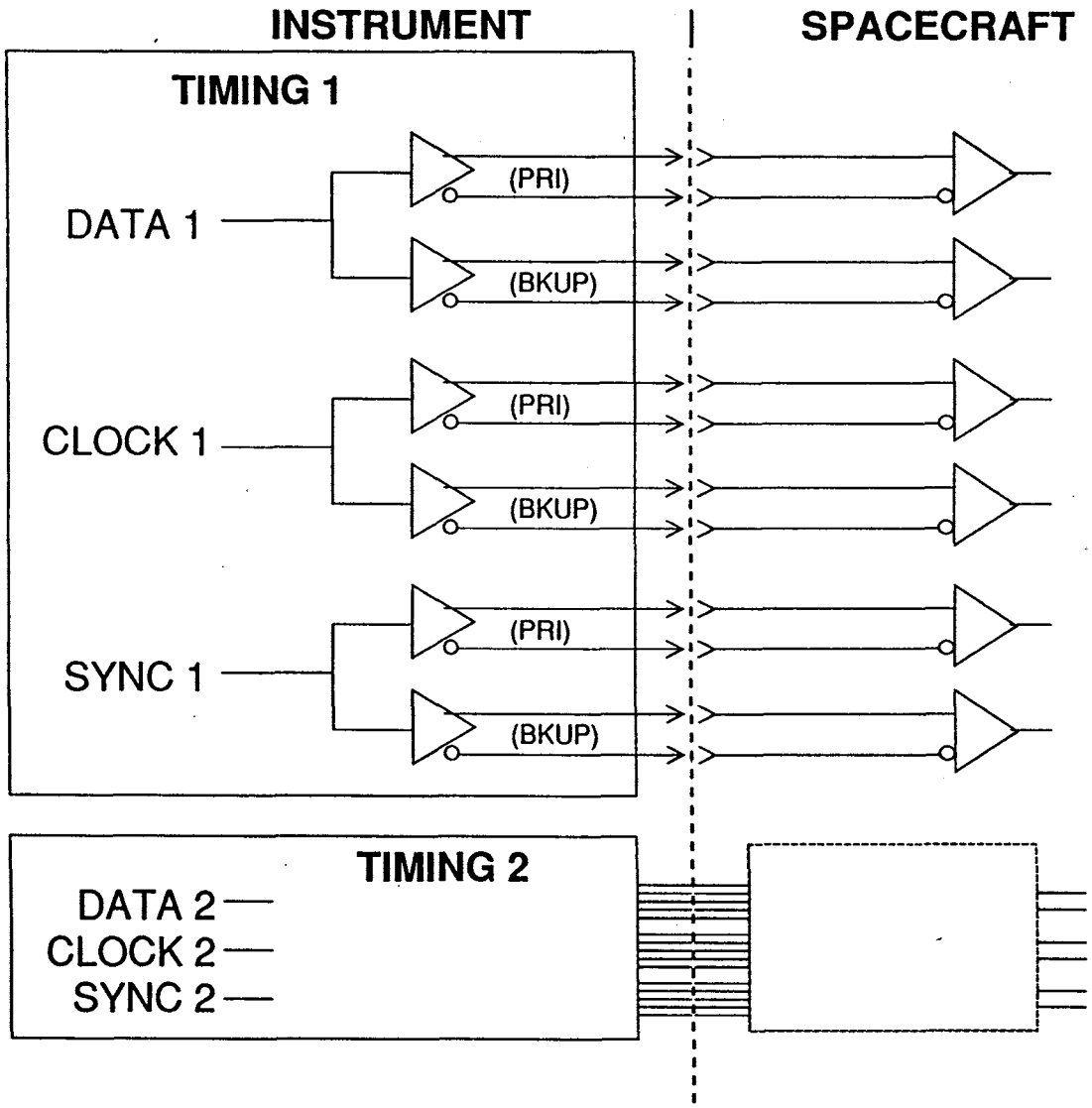

HUGHES

SANTA BARBARA RESEARCH CENTER
a subsidiary

VIDEO DATA INTERFACE

7/91
91-0441-192

SERVO CONTROLS

HUGHES

SANTA BARBARA RESEARCH CENTER
a subsidiary

- CONTROL DRIVES NEEDED FOR:
  - TELESCOPE
  - HALF-ANGLE MIRROR
  - MOMENTUM COMPENSATOR
  - TILT MECHANISM

SERVO CONTROL BLOCK DIAGRAMS

HUGHES

SANTA BARBARA RESEARCH CENTER
a subsidiary

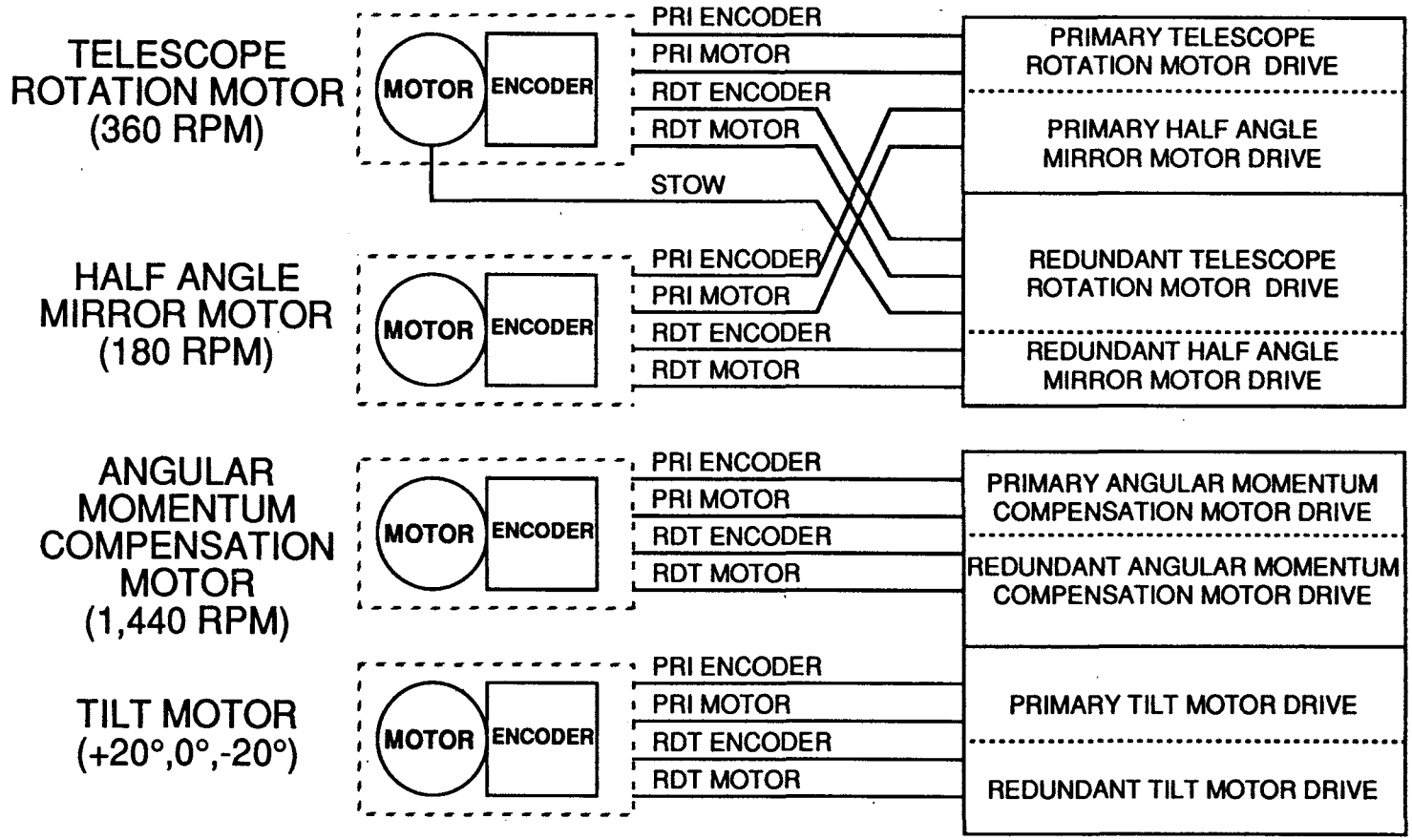

7/91
91-0441-193A

SERVO DRIVE REQUIREMENTS

HUGHES

SANTA BARBARA RESEARCH CENTER
a subsidiary

- SPEED MATCHING TO REFERENCE
- SPEED UNIFORMITY
- INDEX PULSE TIMING ACCURACY
- TELESCOPE/HALF-ANGLE POSITION SYNCHRONIZATION

INITIAL MOTOR CONTROL ERROR BUDGET

HUGHES

SANTA BARBARA RESEARCH CENTER
a subsidiary

PARAMETERS		TELESCOPE	1/2 ANGLE MIRROR	REMARKS
Design Factors	(1σ)			
Sensitivity		1.00	0.40	half angle = 2/5; (double/focused system)
allowance		134.35 μr (rms)	335.38 μr (rms)	allocated from pointing error requirement
encoder output error		200.00 μr (rms)	200.00 μr (rms)	rqmt (10 μrad easily achievable)
encoder sync pip error		20.00 μr (rms)	20.00 μr (rms)	Repeatability, cycle to cycle
encoder cycles/rev		2048	2048	
Motor Factors				
System Inertia	J	1.50 in-oz sec^2	0.20 in-oz sec^2	estimates
Speed		360 rpm	180 rpm	
Motor Poles	Wc	24	24	2 phase, brushless
Servo Bandwidth		20 Hz	20 Hz	
Motor Loads				
bearing friction		4.00 in-oz	4.00 in-oz	End Of Life (<2 in-oz initial)
viscous drag		6.00 in-oz	6.00 in-oz	estimated
(air drag)		*6.00 in-oz*	*0.60 in-oz*	*applies during Ground Testing Only*
(air drag-fluctuations)		*±0.30 in-oz*	*±0.03 in-oz*	*est ~10% of air drag*
Total		10.00 in-oz	10.00 in-oz	Vacuum EOL
		16.00 in-oz	*10.60 in-oz*	*Ground Testing*
System Errors				
cogging		6.51 μrad	195.45 μrad	2.0 in-oz @ 72Hz, @36 Hz
torque ripple		1.22 μrad	36.65 μrad	1.5 in-oz @ 144Hz, @72 Hz
bearing rumble		16.89 μrad	126.65 μrad	0.4 in-oz step disturbance
encoder error		20.23 μrad	28.60 μrad	allowance filtered by servo bandwidth
Total		26.38 μr (rms)	237.49 μr (rms)	
		26.38 μr (rms)	*95.00 μr (rms)*	*sensitivity factored in*
SYSTEM		**Pointing Error**		
Requirement		**190.00 μrad (rms)**		~1/8 Pixel SPEC: (3σ <600 μrad)
Expected / Budgeted		**98.59 μrad (rms)**		includes 1/2 angle sensitivity

7/91
91-0441-196A

SCAN MECHANISM CONTROL CONCEPT

HUGHES

SANTA BARBARA RESEARCH CENTER
a subsidiary

- MATCH TO INTERNAL FREQUENCY
- DEVELOP SPEED/POSITION ERROR
- USE OPTICAL ENCODERS TO PROVIDE VELOCITY, START PULSE, AND COMMUTATION INFORMATION

SCAN MECHANISM AND ANGULAR MOMENTUM DRIVE IMPLEMENTATION

HUGHES

SANTA BARBARA RESEARCH CENTER
a subsidiary

- CURRENT PLAN IS TO USE IDENTICAL MOTOR ASSEMBLIES FOR TELESCOPE AND HALF-ANGLE MIRROR MOTORS
- MOTORS AND DRIVERS ON CONTINUOUSLY
- TELESCOPE AND HALF-ANGLE MIRROR CONTROLLERS TO BE INTEGRATED PWB DESIGN (REDUNDANT IN CCA)
- ANGULAR MOMENTUM CONTROL IS ON SEPARATE CCA (WITH TILT MOTOR CONTROL ELECTRONICS)
- DRIVER DESIGN PHASE TO START 8/1
- EACH CONTROL WILL PROVIDE ANALOG TELEMETRY FOR PHASE ERROR AND DRIVE SIGNALS
- ASTABLE CLOCK CKT RUNS WITHOUT TIMING INPUT
- RESYNCHRONIZE (PHASE) WITHIN 1 (TBR) MINUTE AFTER TIMING COMMAND ON (SPEC IS 2 MINUTES FROM STOP/OFF)

SERVO CONTROL BLOCK DIAGRAM

HUGHES

SANTA BARBARA RESEARCH CENTER
a subsidiary

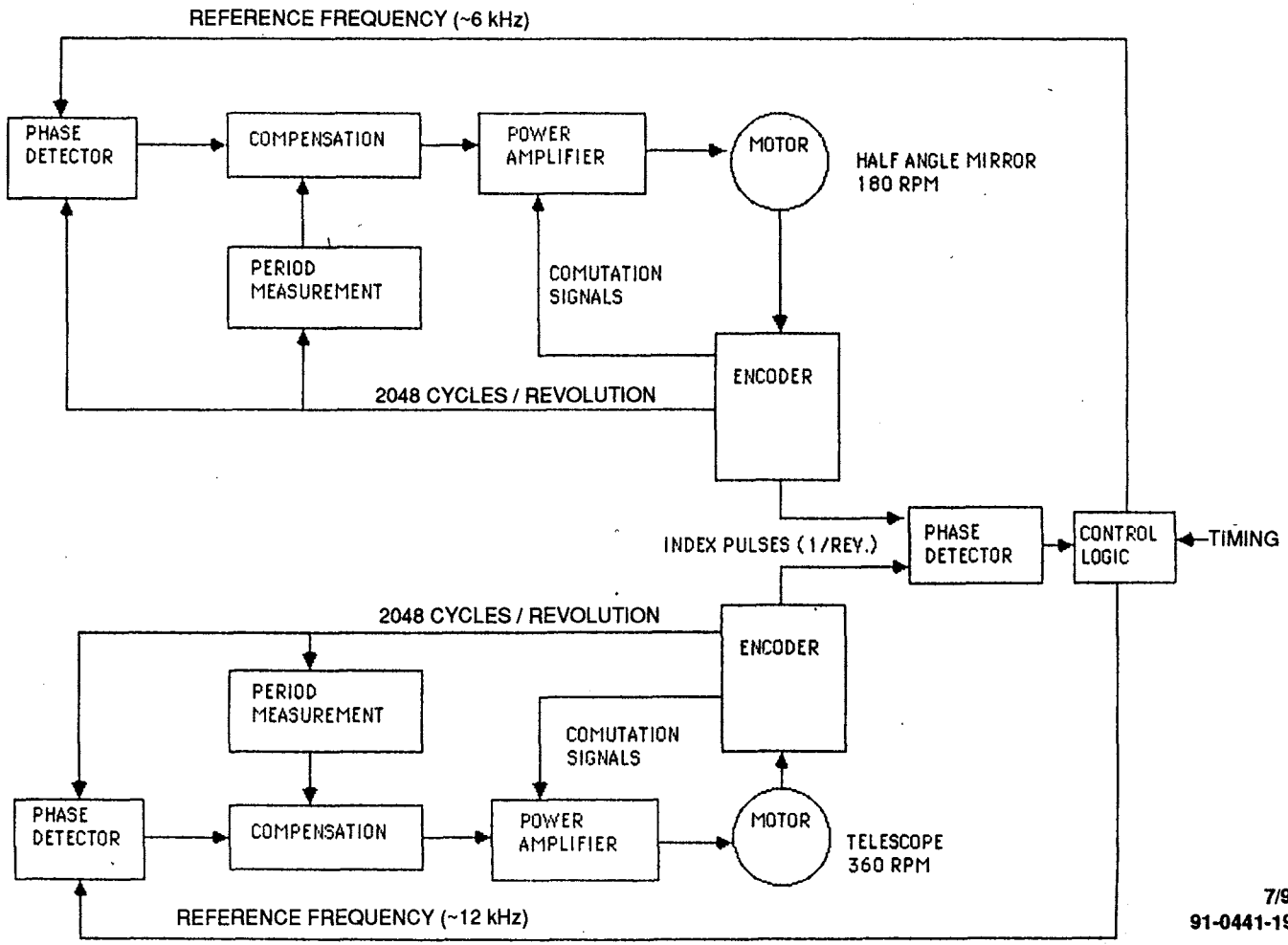

7/91
91-0441-197

SERVO LOOP DIAGRAM

HUGHES

SANTA BARBARA RESEARCH CENTER
a subsidiary

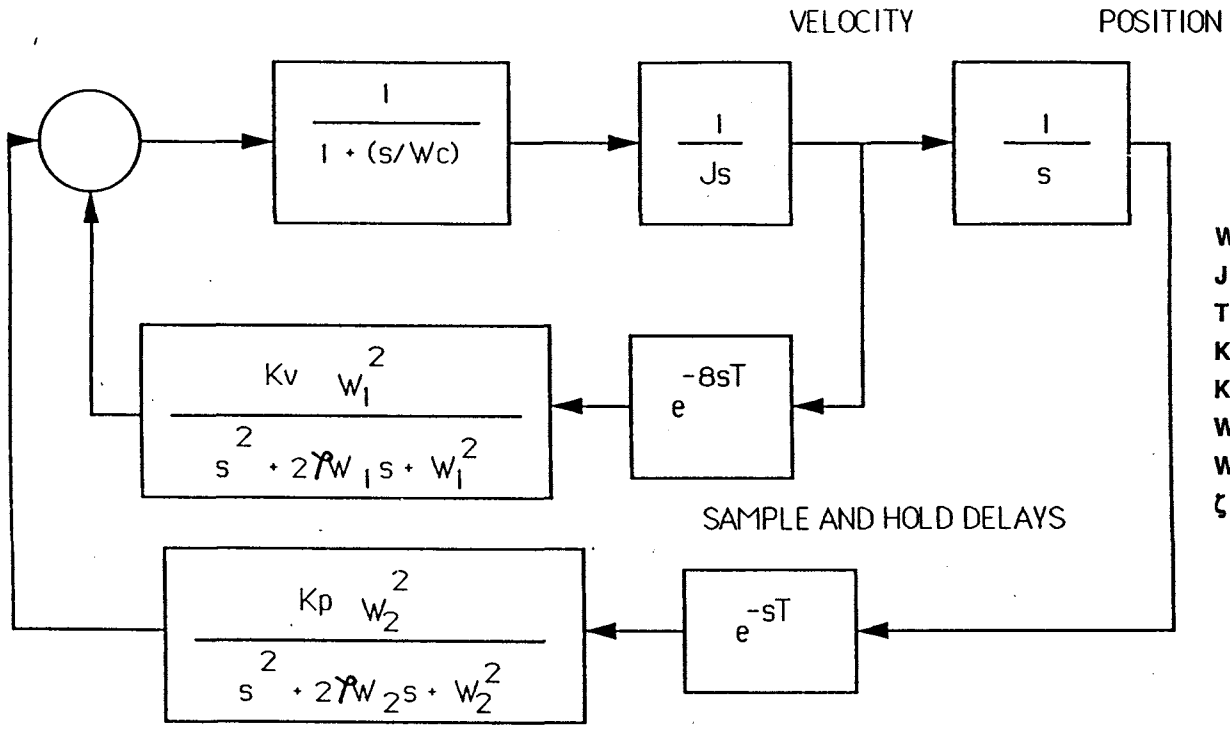

Wc = MOTOR POLE
J = MIRROR INERTIA
T = FEEDBACK UPDATE RATE
Kv = VELOCITY LOOP GAIN
Kp = POSITION LOOP GAIN
W1 = FILTER CUTOFF FREQUENCY
W2 = FILTER CUTOFF FREQUENCY
ζ = DAMPING FACTOR

THE DESIGN FEASIBILITY WILL BE VERIFIED USING A FAIRLY DETAILED MODEL FOR THE ANALYSIS OF THE SYSTEM STABILITY MARGINS.

SERVO LOOP PARAMETERS

HUGHES

SANTA BARBARA RESEARCH CENTER
a subsidiary

PARAMETERS		TELESCOPE	1/2 ANGLE MIRROR	ANGULAR COMP	REMARKS
Servo Factors					
MOTOR POLE	Wc	150.80 rad/sec	150.80 rad/sec	*150.80 rad/sec*	***Italics = estimated***
MIRROR INTERTIA	J	1.50 in-oz sec^2	0.20 in-oz sec^2	*2.00 in-oz sec^2*	
FEEDBACK UPDATE RATE	T	0.00 µsec	0.00 µsec	0.00 µsec	0 = TBS
VELOCITY LOOP GAIN	Kv	0.00 in-oz/rad/sec	0.00 in-oz/rad/sec	0.00 in-oz/rad/sec	
POSITION LOOP GAIN	Kp	0.00 rad/sec	0.00 rad/sec	0.00 rad/sec	
FILTER CUTOFF Frequency	W1	0.00 rad/sec	0.00 rad/sec	0.00 rad/sec	
FILTER CUTOFF Frequency	W2	0.00 rad/sec	0.00 rad/sec	0.00 rad/sec	
DAMPING FACTOR	ζ	*0.7*	*0.7*	*0.7*	

7/91
91-0441-198AA

MIRROR CONTROL BODE PLOT ANALYSIS SHOWS ADEQUATE STABILITY MARGINS

HUGHES

SANTA BARBARA RESEARCH CENTER
a subsidiary

GAIN/PHASE PLOT (CALCULATED)

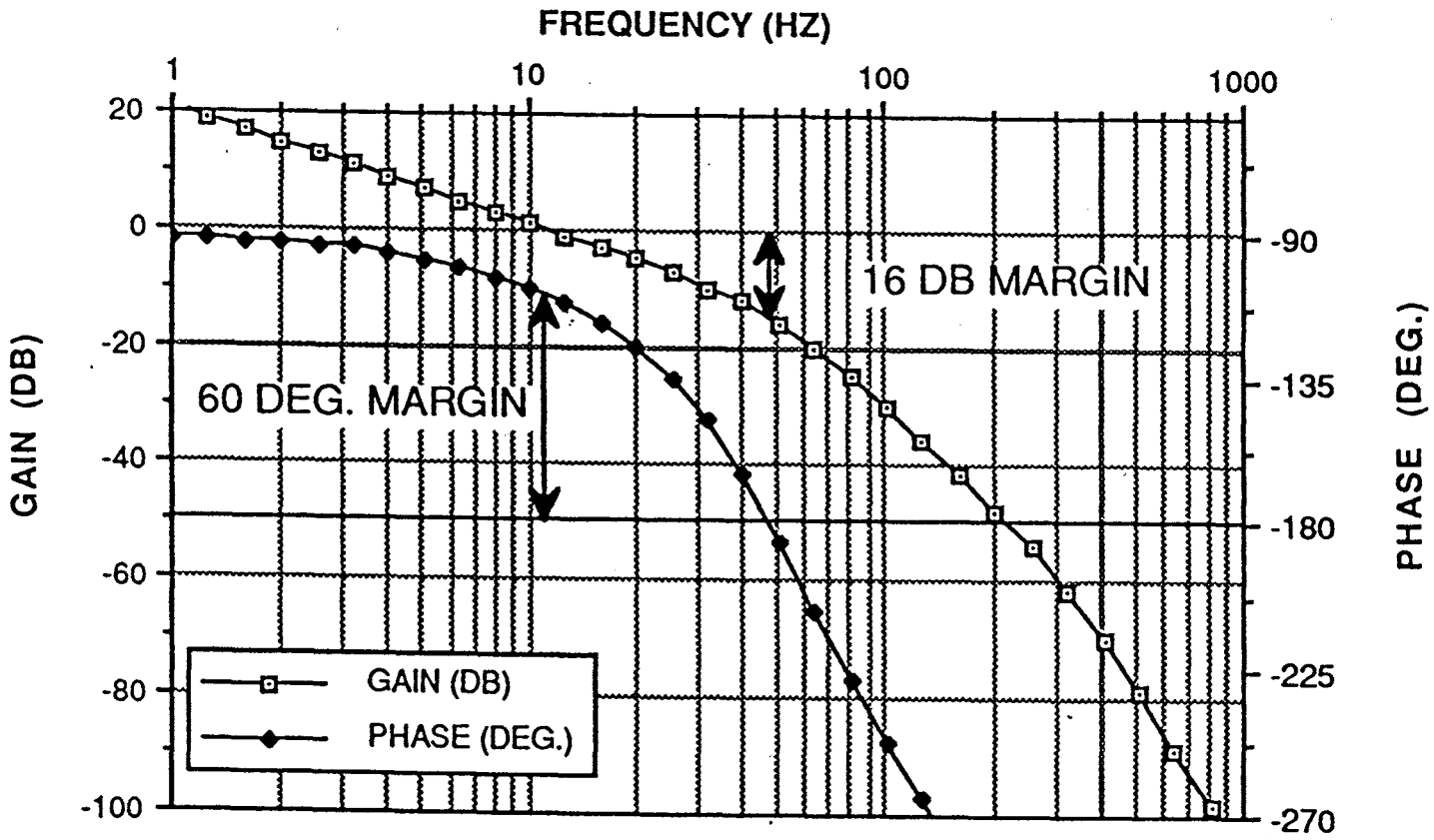

7/91
91-0441-198B

PRIMARY AND REDUNDANT MOTOR DRIVE INTERCONNECTS

HUGHES

SANTA BARBARA RESEARCH CENTER
a subsidiary

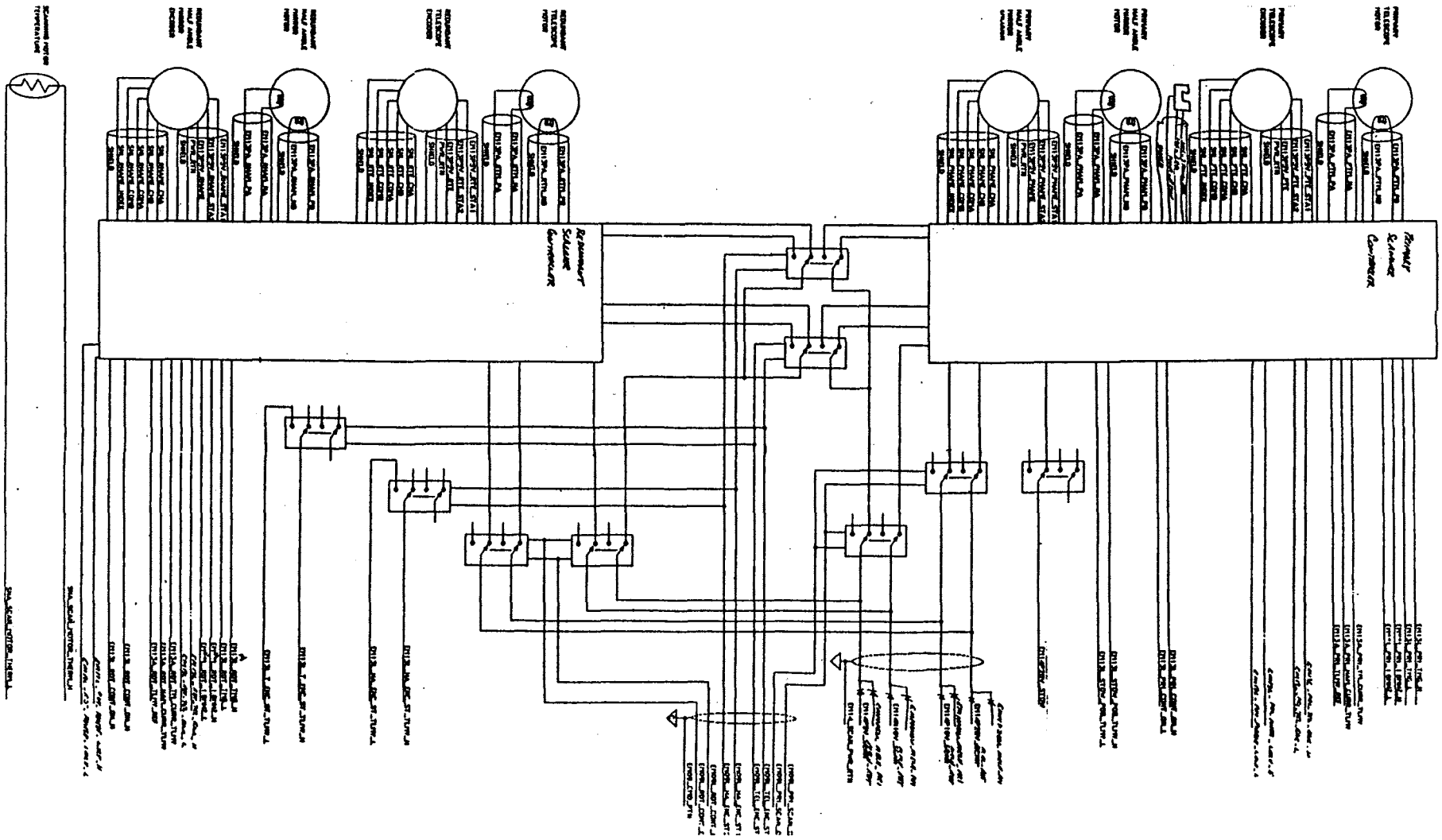

6/91
91-0441-199

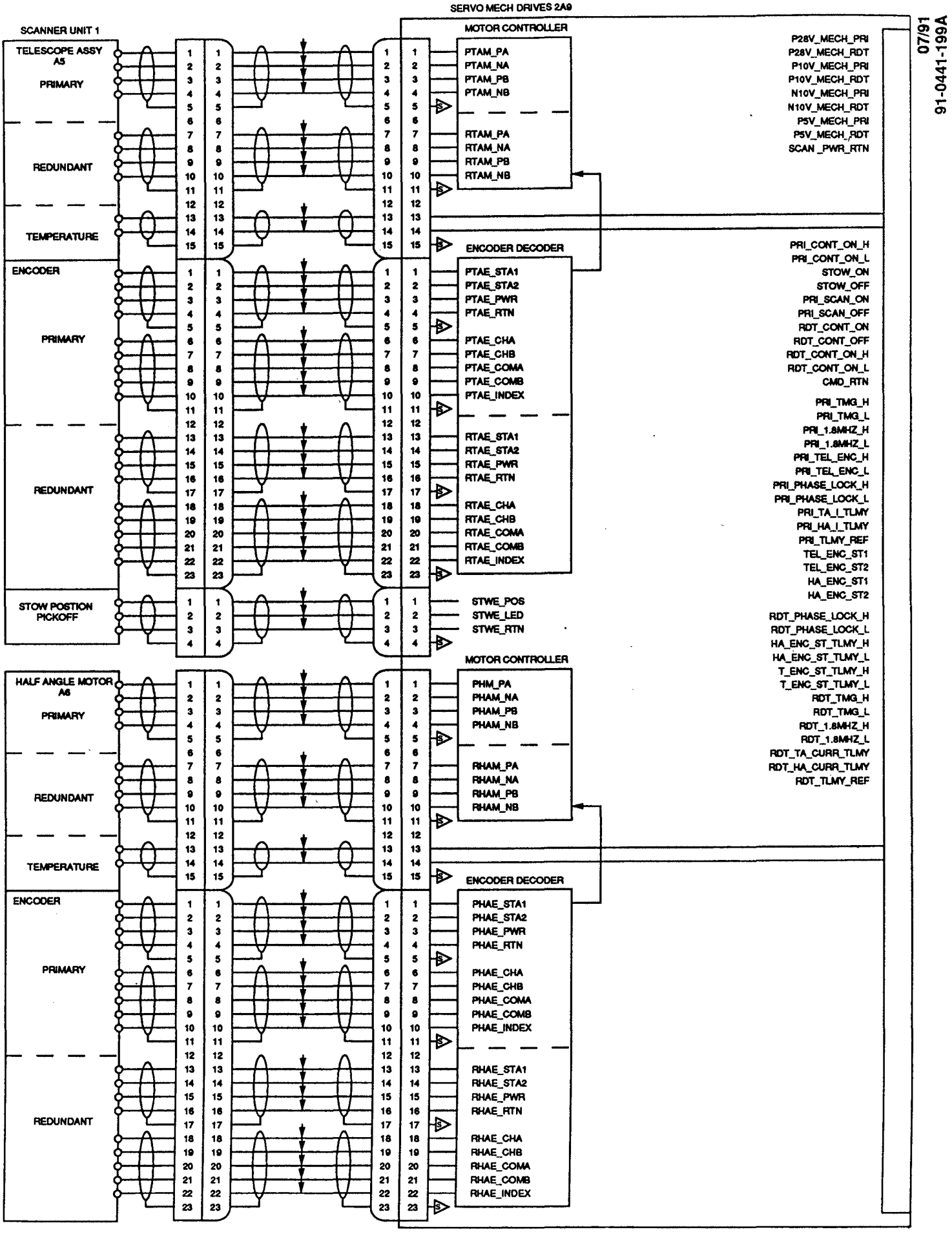

07/91
91-0441-199A

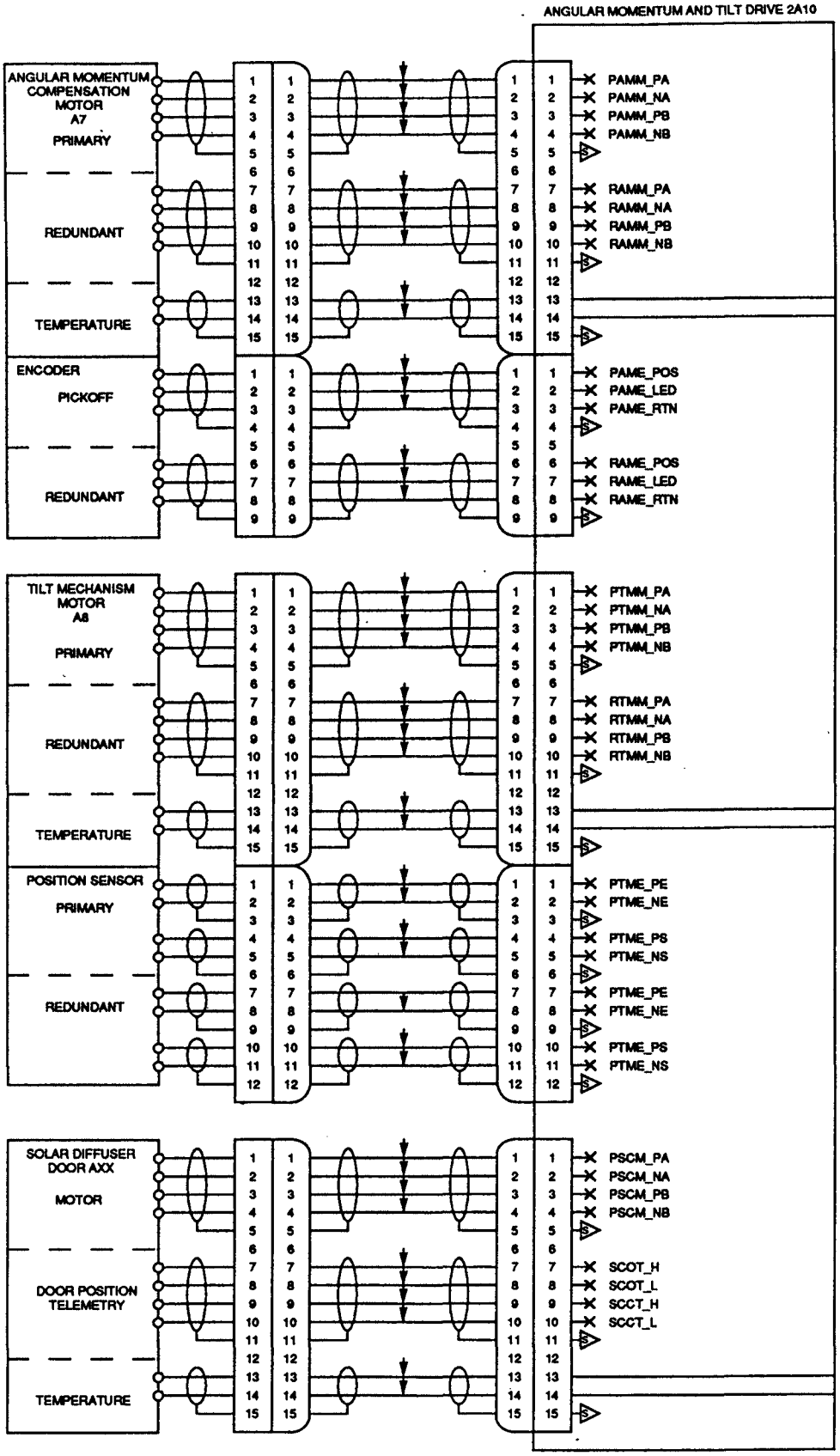
ANGULAR MOMENTUM AND TILT DRIVE 2A10
ANGULAR MOMENTUM COMPENSATION MOTOR A7
PRIMARY
REDUNDANT
TEMPERATURE
PAMM_PA
PAMM_NA
PAMM_PB
PAMM_NB
RAMM_PA
RAMM_NA
RAMM_PB
RAMM_NB
ENCODER
PICKOFF
REDUNDANT
PAME_POS
PAME_LED
PAME_RTN
RAME_POS
RAME_LED
RAME_RTN
TILT MECHANISM MOTOR A8
PRIMARY
REDUNDANT
TEMPERATURE
PTMM_PA
PTMM_NA
PTMM_PB
PTMM_NB
RTMM_PA
RTMM_NA
RTMM_PB
RTMM_NB
POSITION SENSOR
PRIMARY
REDUNDANT
PTME_PE
PTME_NE
PTME_PS
PTME_NS
PTME_PE
PTME_NE
PTME_PS
PTME_NS
SOLAR DIFFUSER DOOR AXX
MOTOR
DOOR POSITION TELEMETRY
TEMPERATURE
PSCM_PA
PSCM_NA
PSCM_PB
PSCM_NB
SCOT_H
SCOT_L
SCCT_H
SCCT_L

COMMAND/TELEMETRY

6/91
91-0441-200

CMD/TLMY INTERFACE

HUGHES

SANTA BARBARA RESEARCH CENTER
a subsidiary

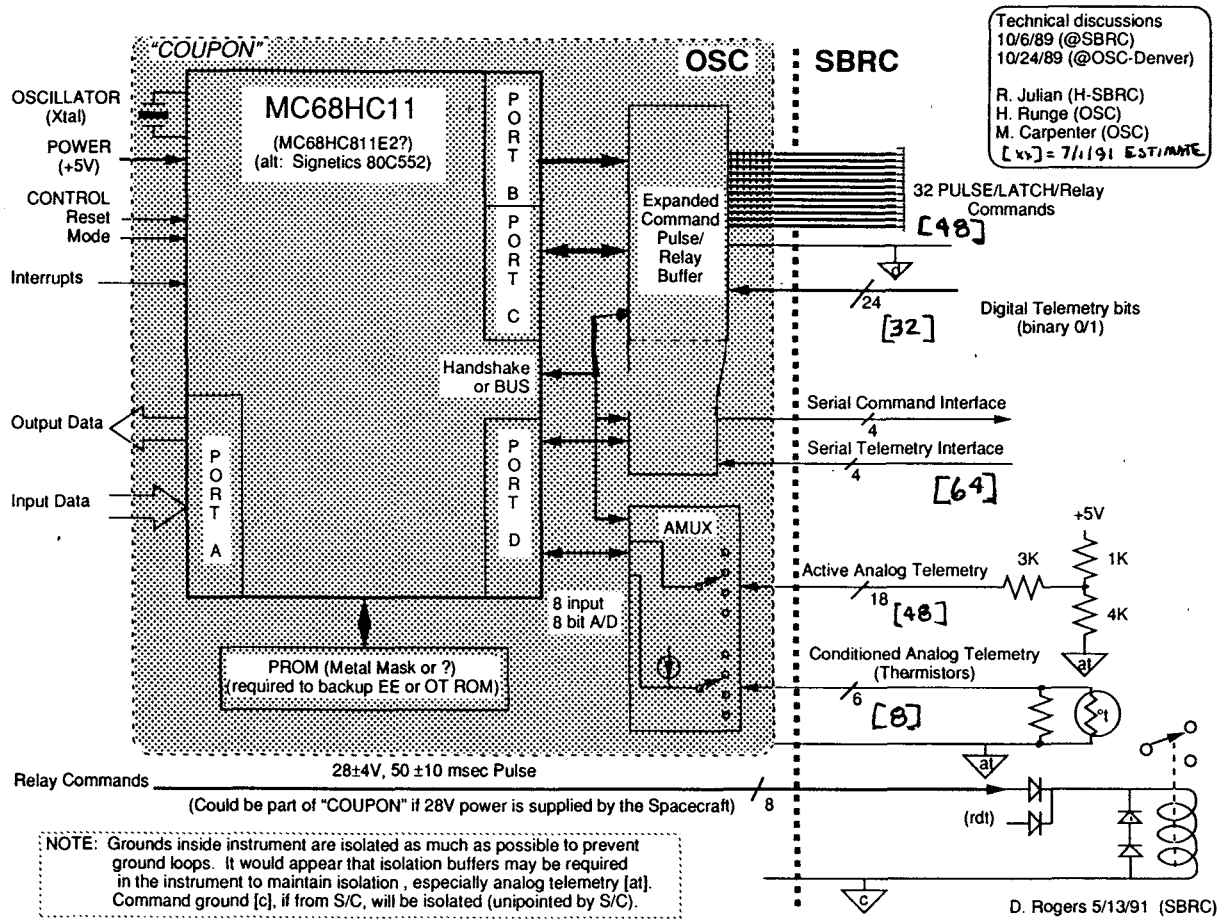

Technical discussions
10/6/89 (@SBRC)
10/24/89 (@OSC-Denver)

R. Julian (H-SBRC)
H. Runge (OSC)
M. Carpenter (OSC)
[xx] = 7/1/91 ESTIMATE

NOTE: Grounds inside instrument are isolated as much as possible to prevent ground loops. It would appear that isolation buffers may be required in the instrument to maintain isolation, especially analog telemetry [at]. Command ground [c], if from S/C, will be isolated (unipointed by S/C).

D. Rogers 5/13/91 (SBRC)

7/91
91-0441-200A

COMMAND SIGNALS

HUGHES

SANTA BARBARA RESEARCH CENTER
a subsidiary

- DIRECT RELAY COMMANDS
  - POWER, ETC.
  - 8 OF THESE
- INDIRECT RELAY COMMANDS
  - SUBSYSTEM POWER, CROSS-STRAPPING, ETC.
  - 32 OF THESE [48 LISTED]
- "SERIAL" COMMANDS
  - GAINS, ETC.
  - 64 OF THESE

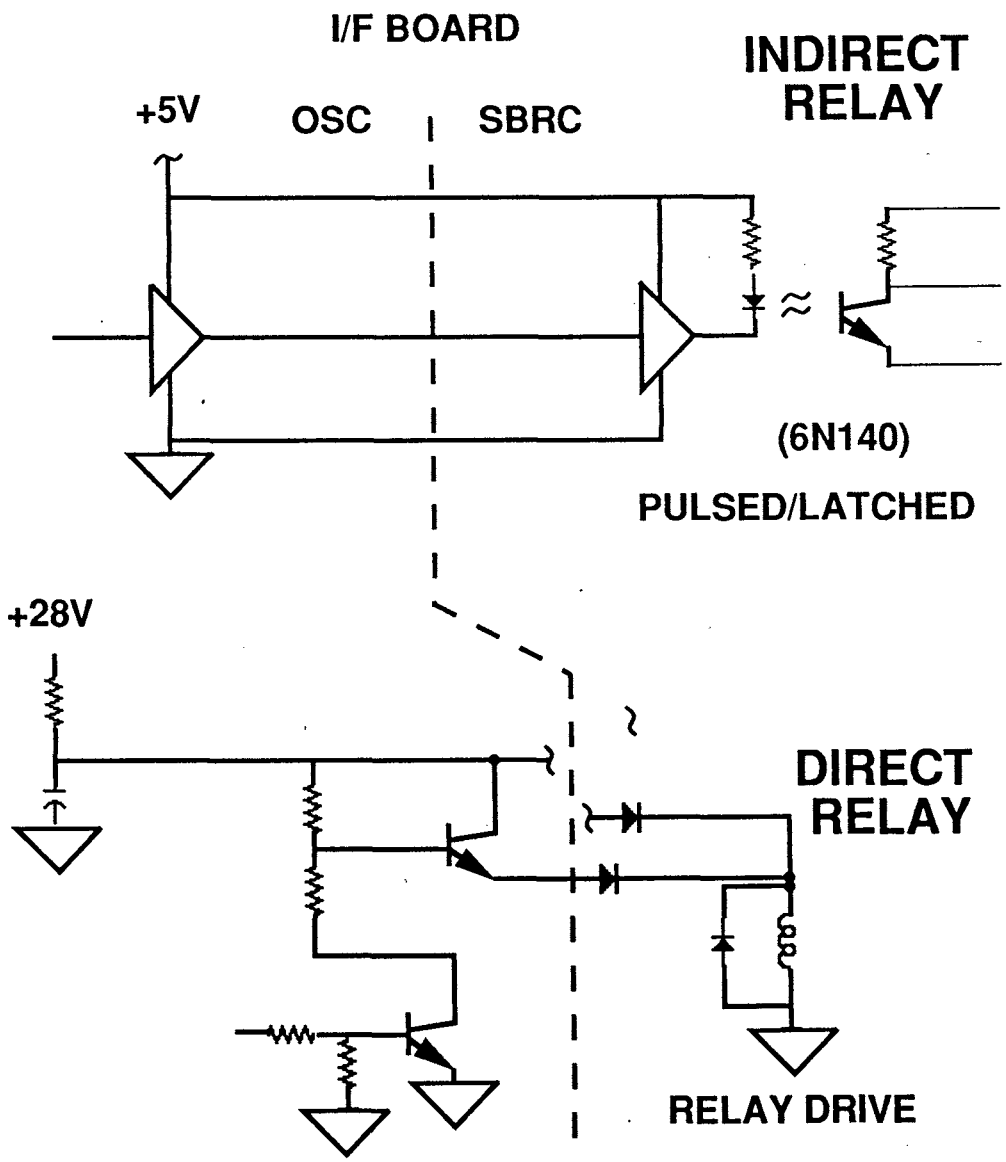

HUGHES

SANTA BARBARA RESEARCH CENTER
a subsidiary

COMMAND SIGNAL INTERFACE CIRCUIT

7/91
91-0441-202

TELEMETRY SIGNALS

HUGHES

SANTA BARBARA RESEARCH CENTER
a subsidiary

- ANALOG
  - ACTIVE (VOLTAGES, BUFFERED CURRENT TELEMETRY)
    - 18 SIGNALS [48 LISTED]
  - PASSIVE (TEMPERATURE SENSORS)
    - 6 SIGNALS [8 LISTED]
- DIGITAL
  - BI-LEVEL (RELAY CONTACT OR OPTO-ISOLATOR OUTPUT)
  - 24 SIGNALS [32 LISTED]
  - SERIAL (GAIN, TDI SELECT)
    - 64 BITS

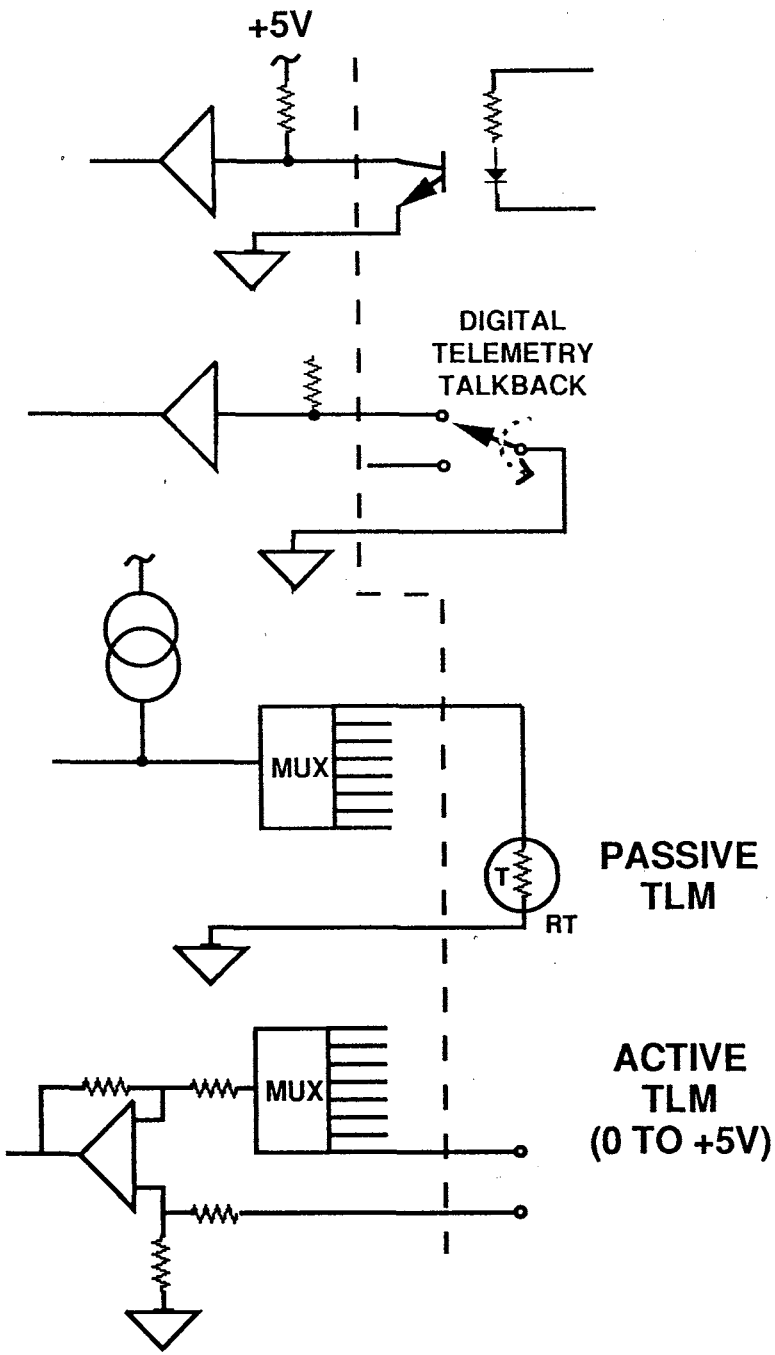

HUGHES

SANTA BARBARA RESEARCH CENTER
a subsidiary

TELEMETRY INTERFACE CIRCUITS

7/91
91-0441-204

COMMAND #	NAME	What It Does	TELEMETRY (DIGITAL) #	What It Means
R01	POWER SUPPLY A ON	APPLIES SPACECRAFT POWER TO POWER SUPPLY A INPUT.	A01	0 - 5V POWER SUPPLY A CURRENT TELEMETRY.
R02	POWER SUPPLY A OFF	REMOVES SPACECRAFT POWER FROM POWER SUPPLY A INPUT.	A01	
R03	POWER SUPPLY B ON	APPLIES SPACECRAFT POWER TO POWER SUPPLY B INPUT.	A02	0 - 5V POWER SUPPLY B CURRENT TELEMETRY.
R04	POWER SUPPLY B OFF	REMOVES SPACECRAFT POWER FROM POWER SUPPLY B INPUT.	A02	
R05	TIMING A ON	SELECTS TIMING CONTROLLER A.	T01	HIGH FOR TIMING CONTOLLER A ON. LOW FOR TIMING CONTROLLER B ON.
R06	TIMING B ON	SELECTS TIMING CONTROLLER B.	T01	
R07	STOW POSITION ON	SENDS TELESCOPE TO STOW POSITION WHEN POWER IS ON.	T02	HIGH FOR STOW COMMAND RECIEVED. LOW FOR NORMAL OPERATION.
R08	STOW POSITION OFF	NORMAL TELESCOPE OPERATION.	T03	HIGH FOR STOW POSTION LOCK. LOW FOR UNLOCKED.
T01	SCAN HEATER ON	SCANNER HEATER ON WHEN POWER SUPPLY IS ON.	T04	HIGH FOR HEATER ON. LOW FOR HEATER OFF.
T02	SCAN HEATER OFF	SCANNER HEATER OFF.	T04	
T03	BOX HEATER ON	BOX HEATER ON WHEN POWER SUPPLY IS ON.	T05	HIGH FOR HEATER ON. LOW FOR HEATER OFF.
T04	BOX HEATER OFF	BOX HEATER OFF	T05	
T05	TELESCOPE DRIVE MOTOR A ON	APPLIES POWER TO DRIVE A ELECTRONICS. DESELECTS DRIVE B.	T06	HIGH FOR DRIVE A ON. LOW FOR DRIVE A OFF.
T06	TELSCOPE DRIVE MOTOR B ON	APPLIES POWER TO DRIVE B ELECTRONICS. DESELECTS DRIVE A.	T07	HIGH FOR DRIVE B ON. LOW FOR DRIVE B OFF.
			A03	0 - 5V TELESCOPE MOTOR DRIVE CURRENT TELEMETRY.
T07	TELESCOPE ENCODER A SELECT	APPLIES POWER TO ENCODER A ELECTRONICS. DESELECTS ENCODER B.	T08	HIGH FOR ENCODER A ON. LOW FOR ENCODER A OFF.
T08	TELESCOPE ENCODER B SELECT	APPLIES POWER TO ENCODER B ELECTRONICS. DESELECTS ENCODER A.	T09	HIGH FOR ENCODER B ON. LOW FOR ENCODER B OFF.
T09	TELESCOPE DRIVE OFF	REMOVES POWER FROM DRIVE A AND B, AND ENCODER A AND B CIRCUITS.		
T10	HALF ANGLE MIRROR DRIVE MOTOR A ON	APPLIES POWER TO DRIVE A ELECTRONICS. DESELECTS DRIVE B.	T10	HIGH FOR DRIVE A ON. LOW FOR DRIVE A OFF.
T11	HALF ANGLE MIRROR DRIVE MOTOR B ON	APPLIES POWER TO DRIVE B ELECTRONICS. DESELECTS DRIVE A.	T11	HIGH FOR DRIVE B ON. LOW FOR DRIVE B OFF.
			A04	0 - 5V HALF ANGLE MIRROR DRIVE CURRENT TELEMETRY.
T12	HALF ANGLE MIRROR ENCODER A ON	APPLIES POWER TO ENCODER A ELECTRONICS. DESELECTS ENCODER B.	T12	HIGH FOR ENCODER A ON. LOW FOR ENCODER A OFF.
T13	HALF ANGLE MIRROR ENCODER B ON	APPLIES POWER TO ENCODER B ELECTRONICS. DESELECTS ENCODER A.	T13	HIGH FOR ENCODER B ON. LOW FOR ENCODER B OFF.
T14	HALF ANGLE MIRROR DRIVE OFF	REMOVES POWER FROM DRIVE A AND B, AND ENCODER A AND B CIRCUITS.	A04	
T15	MOMENTUM COMP. DRIVE MOTOR A ON	APPLIES POWER TO DRIVE A ELECTRONICS. DESELECTS DRIVEB.	T13	HIGH FOR DRIVE A ON. LOW FOR DRIVE A OFF.
T16	MOMENTUM COMP. DRIVE MOTOR B ON	APPLIES POWER TO DRIVE B ELECTRONICS. DESELECTS DRIVE A.	T14	HIGH FOR DRIVE B ON. LOW FOR DRIVE B OFF.
			A05	0 - 5V MOMENTUM COMPENSATION DRIVE CURRENT TELEMETRY.
T17	MOMENTUM COMP. ENCODER A ON	APPLIES POWER TO ENCODER A ELECTRONICS. DESELECTS ENCODER B.	T15	HIGH FOR ENCODER A ON. LOW FOR ENCODER A OFF.
T18	MOMENTUM COMP. ENCODER B ON	APPLIES POWER TO ENCODER B ELECTRONICS. DESELECTS ENCODER B.	T16	HIGH FOR ENCODER B ON. LOW FOR ENCODER B OFF.

RXX = RELAY COMMANDS
TXX = TTL COMMANDS
SXX = SERIAL COMMANDS

AXX = ANALOG TELEMETRY
TXX = TTL TELEMETRY
SXX = SERIAL TELEMETRY

6/91
91-0441-206

COMMAND #	NAME	What It Does	TELEMETRY #	What It Means
T19	MOMENTUN COMP. DRIVE OFF	REMOVES POWER FROM DRIVE A AND B, AND ENCODER A AND B CIRCUITS.	A05	
T20	TILT MOTOR DRIVE ON	APPLIES POWER TO DRIVE ELECTRONICS.	T17	HIGH FOR DRIVE ON. LOW FOR DRIVE OFF.
T21	TILT MOTOR DRIVE OFF	REMOVES POWER FROM DRIVE ELECTRONICS.	T17	
T22	TILT MOTOR ENCODER ON	APPLIES POWER TO ENCODER ELECTRONICS.	T18	HIGH FOR ENCODER ON. LOW FOR ENCODER OFF.
T23	TILT MOTOR ENCODER OFF	REMOVES POWER FROM ENCODER ELECTRONICS.	T18	
T24	OSCILLATOR A ON	SELECTS OSCILLATOR A FOR TIMING. DESELECTS B.	T19	HIGH WHEN OSCILLATOR A SELECTED. LOW WHEN OSCILLATOR B SELECTED.
T25	OSCILLATOR B ON	SELECTS OSCILLATOR B FOR TIMING. DESELECTS A.	T19	
T26	TIMING A SELECT	SELECTS TIMING A . DESELECTS B.	T20	HIGH WHEN TIMING A SELECTED. LOW WHEN TIMING B SELECTED.
T27	TIMINNG B SELECT	SELECTS TIMING B. DESELECTS A.	T20	
T28	BANDS 1 - 8 ON	APPLES POWER TO BAND 1 - 8 ELECTRONICS.		
T29	BANDS 1 - 8 OFF	REMOVES POWER FROM BAND 1 - 8 ELECTRONICS.		
T30	BAND 1 ON	APPLIES POWER TO BAND 1 ELECTRONICS.	T21	HIGH WHEN BAND 1 ON. LOW WHEN BAND 1 OFF.
T31	BAND 2 ON	APPLIES POWER TO BAND 2 ELECTRONICS.	T22	HIGH WHEN BAND 2 ON. LOW WHEN BAND 2 OFF.
T32	BAND 3 ON	APPLIES POWER TO BAND 3 ELECTRONICS.	T23	HIGH WHEN BAND 3 ON. LOW WHEN BAND 3 OFF.
T33	BAND 4 ON	APPLIES POWER TO BAND 4 ELECTRONICS.	T24	HIGH WHEN BAND 4 ON. LOW WHEN BAND 4 OFF.
T34	BAND 5 ON	APPLIES POWER TO BAND 5 ELECTRONICS.	T25	HIGH WHEN BAND 5 ON. LOW WHEN BAND 5 OFF.
T35	BAND 6 ON	APPLIES POWER TO BAND 6 ELECTRONICS.	T26	HIGH WHEN BAND 6 ON. LOW WHEN BAND 6 OFF.
T36	BAND 7 ON	APPLIES POWER TO BAND 7 ELECTRONICS.	T27	HIGH WHEN BAND 6 ON. LOW WHEN BAND 6 OFF.
T37	BAND 8 ON	APPLIES POWER TO BAND 8 ELECTRONICS.	T28	HIGH WHEN BAND 6 ON. LOW WHEN BAND 6 OFF.
T38	TILT MOTOR FORWARD	MOVES TILT MOTOR TO FORWARD POSITION WHEN POWER IS ON.	T29	HIGH WHEN IN FORWARD TILT POSTION.
T39	TILT MOTOR MIDDLE	MOVES TILT MOTOR TO MIDDLE POSTION WHEN POWER IS ON.	T30	HIGH WHEN IN MIDDLE POSTION.
T40	TILT MOTOR BACKWARD	MOVES TILT MOTOR TO BACKWARD POSTION WHEN POWER IS ON.	T31	HIGH WHEN IN BACKWARD TILT POSTION.
S01	BAND 1 DETECTOR 1 ON	WHEN HIGH DETECTOR IS EXCLUDEDFROM TDL WHEN LOW DETECTOR IS INCLUDED IN TDL	S01	HIGH WHEN DETECTOR IS NOT IN TDL LOW WHEN DETECTOR IS IN TDL
S02	BAND 1 DETECTOR 2 ON	WHEN HIGH DETECTOR IS EXCLUDEDFROM TDL WHEN LOW DETECTOR IS INCLUDED IN TDL	S02	HIGH WHEN DETECTOR IS NOT IN TDL LOW WHEN DETECTOR IS IN TDL
S03	BAND 1 DETECTOR 3 ON	WHEN HIGH DETECTOR IS EXCLUDEDFROM TDL WHEN LOW DETECTOR IS INCLUDED IN TDL	S03	HIGH WHEN DETECTOR IS NOT IN TDL LOW WHEN DETECTOR IS IN TDL
S04	BAND 1 DETECTOR 4 ON	WHEN HIGH DETECTOR IS EXCLUDEDFROM TDL WHEN LOW DETECTOR IS INCLUDED IN TDL	S04	HIGH WHEN DETECTOR IS NOT IN TDL LOW WHEN DETECTOR IS IN TDL
S05	BAND 1 GAIN BIT 1		S05	
S06	BAND 1 GAIN BIT 2		S06	
S07	BAND 2 DETECTOR 1 ON	WHEN HIGH DETECTOR IS EXCLUDEDFROM TDL WHEN LOW DETECTOR IS INCLUDED IN TDL	S07	HIGH WHEN DETECTOR IS NOT IN TDL LOW WHEN DETECTOR IS IN TDL

RXX = RELAY COMMANDS
TXX = TTL COMMANDS
SXX = SERIAL COMMANDS

AXX = ANALOG TELEMETRY
TXX = TTL TELEMETRY
SXX = SERIAL TELEMETRY

COMMAND #	NAME	What It Does	TELEMETRY #	What It Means
S08	BAND 2 DETECTOR 2 ON	WHEN HIGH DETECTOR IS EXCLUDEDFROM TDL WHEN LOW DETECTOR IS INCLUDED IN TDL	S08	HIGH WHEN DETECTOR IS NOT IN TDL LOW WHEN DETECTOR IS IN TDL
S09	BAND 2 DETECTOR 3 ON	WHEN HIGH DETECTOR IS EXCLUDEDFROM TDL WHEN LOW DETECTOR IS INCLUDED IN TDL	S09	HIGH WHEN DETECTOR IS NOT IN TDL LOW WHEN DETECTOR IS IN TDL
S10	BAND 2 DETECTOR 4 ON	WHEN HIGH DETECTOR IS EXCLUDEDFROM TDL WHEN LOW DETECTOR IS INCLUDED IN TDL	S10	HIGH WHEN DETECTOR IS NOT IN TDL LOW WHEN DETECTOR IS IN TDL
S11	BAND 2 GAIN BIT 1		S11	
S12	BAND 2 GAIN BIT 2		S12	
S13	BAND 3 DETECTOR 1 ON	WHEN HIGH DETECTOR IS EXCLUDEDFROM TDL WHEN LOW DETECTOR IS INCLUDED IN TDL	S13	HIGH WHEN DETECTOR IS NOT IN TDL LOW WHEN DETECTOR IS IN TDL
S14	BAND 3 DETECTOR 2 ON	WHEN HIGH DETECTOR IS EXCLUDEDFROM TDL WHEN LOW DETECTOR IS INCLUDED IN TDL	S14	HIGH WHEN DETECTOR IS NOT IN TDL LOW WHEN DETECTOR IS IN TDL
S15	BAND 3 DETECTOR 3 ON	WHEN HIGH DETECTOR IS EXCLUDEDFROM TDL WHEN LOW DETECTOR IS INCLUDED IN TDL	S15	HIGH WHEN DETECTOR IS NOT IN TDL LOW WHEN DETECTOR IS IN TDL
S16	BAND 3 DETECTOR 4 ON	WHEN HIGH DETECTOR IS EXCLUDEDFROM TDL WHEN LOW DETECTOR IS INCLUDED IN TDL	S16	HIGH WHEN DETECTOR IS NOT IN TDL LOW WHEN DETECTOR IS IN TDL
S17	BAND 3 GAIN BIT 1		S17	
S18	BAND 3 GAIN BIT 2		S18	
S19	BAND 4 DETECTOR 1 ON	WHEN HIGH DETECTOR IS EXCLUDEDFROM TDL WHEN LOW DETECTOR IS INCLUDED IN TDL	S19	HIGH WHEN DETECTOR IS NOT IN TDL LOW WHEN DETECTOR IS IN TDL
S20	BAND 4 DETECTOR 2 ON	WHEN HIGH DETECTOR IS EXCLUDEDFROM TDL WHEN LOW DETECTOR IS INCLUDED IN TDL	S20	HIGH WHEN DETECTOR IS NOT IN TDL LOW WHEN DETECTOR IS IN TDL
S21	BAND 4 DETECTOR 3 ON	WHEN HIGH DETECTOR IS EXCLUDEDFROM TDL WHEN LOW DETECTOR IS INCLUDED IN TDL	S21	HIGH WHEN DETECTOR IS NOT IN TDL LOW WHEN DETECTOR IS IN TDL
S22	BAND 4 DETECTOR 4 ON	WHEN HIGH DETECTOR IS EXCLUDEDFROM TDL WHEN LOW DETECTOR IS INCLUDED IN TDL	S22	HIGH WHEN DETECTOR IS NOT IN TDL LOW WHEN DETECTOR IS IN TDL
S23	BAND 4 GAIN BIT 1		S23	
S24	BAND 4 GAIN BIT 2		S24	
S25	BAND 5 DETECTOR 1 ON	WHEN HIGH DETECTOR IS EXCLUDEDFROM TDL WHEN LOW DETECTOR IS INCLUDED IN TDL	S25	HIGH WHEN DETECTOR IS NOT IN TDL LOW WHEN DETECTOR IS IN TDL
S26	BAND 5 DETECTOR 2 ON	WHEN HIGH DETECTOR IS EXCLUDEDFROM TDL WHEN LOW DETECTOR IS INCLUDED IN TDL	S26	HIGH WHEN DETECTOR IS NOT IN TDL LOW WHEN DETECTOR IS IN TDL
S27	BAND 5 DETECTOR 3 ON	WHEN HIGH DETECTOR IS EXCLUDEDFROM TDL WHEN LOW DETECTOR IS INCLUDED IN TDL	S27	HIGH WHEN DETECTOR IS NOT IN TDL LOW WHEN DETECTOR IS IN TDL
S28	BAND 5 DETECTOR 4 ON	WHEN HIGH DETECTOR IS EXCLUDEDFROM TDL WHEN LOW DETECTOR IS INCLUDED IN TDL	S28	HIGH WHEN DETECTOR IS NOT IN TDL LOW WHEN DETECTOR IS IN TDL
S29	BAND 5 GAIN BIT 1		S29	
S30	BAND 5 GAIN BIT 2		S30	
S31	BAND 6 DETECTOR 1 ON	WHEN HIGH DETECTOR IS EXCLUDEDFROM TDL WHEN LOW DETECTOR IS INCLUDED IN TDL	S31	HIGH WHEN DETECTOR IS NOT IN TDL LOW WHEN DETECTOR IS IN TDL
S32	BAND 6 DETECTOR 2 ON	WHEN HIGH DETECTOR IS EXCLUDEDFROM TDL WHEN LOW DETECTOR IS INCLUDED IN TDL	S32	HIGH WHEN DETECTOR IS NOT IN TDL LOW WHEN DETECTOR IS IN TDL
S33	BAND 6 DETECTOR 3 ON	WHEN HIGH DETECTOR IS EXCLUDEDFROM TDL WHEN LOW DETECTOR IS INCLUDED IN TDL	S33	HIGH WHEN DETECTOR IS NOT IN TDL LOW WHEN DETECTOR IS IN TDL
S34	BAND 6 DETECTOR 4 ON	WHEN HIGH DETECTOR IS EXCLUDEDFROM TDL WHEN LOW DETECTOR IS INCLUDED IN TDL	S34	HIGH WHEN DETECTOR IS NOT IN TDL LOW WHEN DETECTOR IS IN TDL
S35	BAND 6 GAIN BIT 1		S35	
S36	BAND 6 GAIN BIT 2		S36	

RXX = RELAY COMMANDS
TXX = TTL COMMANDS
SXX = SERIAL COMMANDS

AXX = ANALOG TELEMETRY
TXX = TTL TELEMETRY
SXX = SERIAL TELEMETRY

COMMAND #	NAME	What It Does	TELEMETRY #	What It Means
S37	BAND 7 DETECTOR 1 ON	WHEN HIGH DETECTOR IS EXCLUDEDFROM TDI, WHEN LOW DETECTOR IS INCLUDED IN TDI.	S37	HIGH WHEN DETECTOR IS NOT IN TDI. LOW WHEN DETECTOR IS IN TDI.
S38	BAND 7 DETECTOR 2 ON	WHEN HIGH DETECTOR IS EXCLUDEDFROM TDI. WHEN LOW DETECTOR IS INCLUDED IN TDI.	S38	HIGH WHEN DETECTOR IS NOT IN TDI. LOW WHEN DETECTOR IS IN TDI.
S39	BAND 7 DETECTOR 3 ON	WHEN HIGH DETECTOR IS EXCLUDEDFROM TDI. WHEN LOW DETECTOR IS INCLUDED IN TDI.	S39	HIGH WHEN DETECTOR IS NOT IN TDI. LOW WHEN DETECTOR IS IN TDI.
S40	BAND 7 DETECTOR 4 ON	WHEN HIGH DETECTOR IS EXCLUDEDFROM TDI. WHEN LOW DETECTOR IS INCLUDED IN TDI.	S40	HIGH WHEN DETECTOR IS NOT IN TDI. LOW WHEN DETECTOR IS IN TDI.
S41	BAND 7 GAIN BIT 1		S41	
S42	BAND 7 GAIN BIT 2		S42	
S43	BAND 8 DETECTOR 1 ON	WHEN HIGH DETECTOR IS EXCLUDEDFROM TDI. WHEN LOW DETECTOR IS INCLUDED IN TDI.	S43	HIGH WHEN DETECTOR IS NOT IN TDI. LOW WHEN DETECTOR IS IN TDI.
S44	BAND 8 DETECTOR 2 ON	WHEN HIGH DETECTOR IS EXCLUDEDFROM TDI. WHEN LOW DETECTOR IS INCLUDED IN TDI.	S44	HIGH WHEN DETECTOR IS NOT IN TDI. LOW WHEN DETECTOR IS IN TDI.
S45	BAND 8 DETECTOR 3 ON	WHEN HIGH DETECTOR IS EXCLUDEDFROM TDI. WHEN LOW DETECTOR IS INCLUDED IN TDI.	S45	HIGH WHEN DETECTOR IS NOT IN TDI. LOW WHEN DETECTOR IS IN TDI.
S46	BAND 8 DETECTOR 4 ON	WHEN HIGH DETECTOR IS EXCLUDEDFROM TDI. WHEN LOW DETECTOR IS INCLUDED IN TDI.	S46	HIGH WHEN DETECTOR IS NOT IN TDI. LOW WHEN DETECTOR IS IN TDI.
S47	BAND 8 GAIN BIT 1		S47	
S48	BAND 8 GAIN BIT 2		S48	

RXX = RELAY COMMANDS
TXX = TTL COMMANDS
SXX = SERIAL COMMANDS

AXX = ANALOG TELEMETRY
TXX = TTL TELEMETRY
SXX = SERIAL TELEMETRY

POWER SUPPLY

6/91
91-0441-206D

POWER CONSUMPTION DISTRIBUTION

HUGHES
SANTA BARBARA RESEARCH CENTER
a subsidiary

POWER IN WATTS	SUNLIGHT	TILT	ECLIPSE	HEATERS*
SCANNER				15
MOTORS	15	2	15	—
PREAMPS	8	—	0	—
SCANNER TOTAL	23	2	15	15
ELECTRONIC MODULE	—	—	—	15
POST AMPS/TDI	24	—	—	—
SERVO MECH CONTROL	15	10	15	—
DIGITAL TIMING	3	—	—	—
CMD/TELEMETRY	—	—	—	—
ELECTRONIC MODULE CIRCUIT TOTAL	42	10	15	—
POWER SUPPLY 75% EFF.	22 (15)	4 (2.5)	10 (6)	—
ELECTRONICS MODULE POWER DISSIPATION	64 (57)	14 (12.5)	25 (21)	15
SYSTEM TOTAL	87 (80)	16 (14.5)	40 (36)	30
40% ORBIT AVERAGE	58.8 (53.6)			

* PROBABLY WILL NOT COME ON AS LONG AS SERVO MECHS POWERED
() = 0.85 EFFICIENT POWER SUPPLY

7/91
91-0441-206E

POWER SUPPLY SECONDARY OUTPUTS FOR SeaWiFS ELECTRONICS

HUGHES

SANTA BARBARA RESEARCH CENTER
a subsidiary

VOLTAGE	CURRENT CAPABILITY	SUNLIGHT NOM	SUNLIGHT PEAK	ECLIPSE NOM	FUNCTION
+28V	1A	0.4	0.9	0.4	MOTORS/RELAY
+15V	1A	0.6	0.7	—	ANALOG
-15V	1A	0.6	0.7	—	ANALOG
+10V	0.5A	0.22	0.3	0.22	SERVO MOTOR
-10V	0.5A	0.17	0.2	0.17	SERVO MOTOR
+5V	3A	2.0	2.2	0.8	DIGITAL OR BUFFER CKTS
-5V	3A	0.1	0.2	—	

IDEALLY, WOULD LIKE A +28V, ±10V, +5V FOR SERVOS AND A ±15V, ±5V SUPPLY FOR ANALOG

POWER SUPPLY MAKE/BUY ISSUES

HUGHES

SANTA BARBARA RESEARCH CENTER
a subsidiary

- DECISION FACTORS
  - RELIABILITY
  - SCHEDULE
  - COST
- OUTSIDE VENDORS
  - E-SYSTEMS (SINGLE MODULE)
  - ADVANCED ANALOG (MULTIPLE MODULES)
  - HUGHES A/C
- EXISTING SBRC DESIGNS
  - ETM MUX ECU (RECONFIGURED)

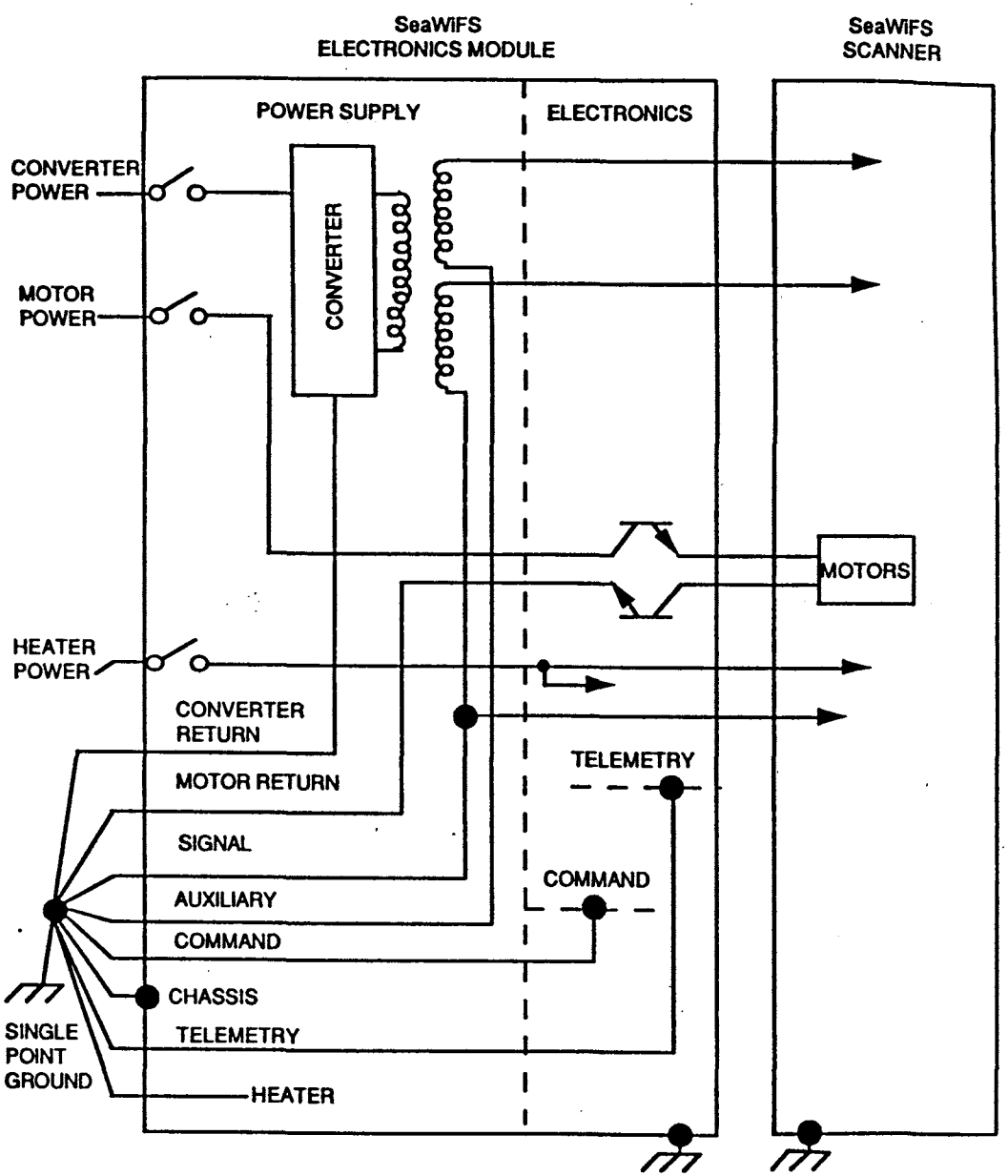

HUGHES

SANTA BARBARA RESEARCH CENTER
a subsidiary

GROUNDING SCHEME

7/91
91-0441-206I

STOW DESCRIPTION

HUGHES

SANTA BARBARA RESEARCH CENTER
a subsidiary

- STOW CIRCUIT ACTUATED BY DIRECT RELAY COMMAND (CROSS-STRAPPED TO TELESCOPE 1 ON / 2 OFF CMD)
- DRIVES TELESCOPE MOTOR TO 180° POSITION WITH SLOW (1 / SEC) PHASED SEQUENCED MOTOR DRIVE
- PICKOFF / INTERRUPTER STOPS SEQUENCE, HOLDS MOTOR
- STOW UNLATCH COMMAND CROSS-STRAPPED WITH PS 1 OFF
- STOW POWER ROUTED THRU "OFF" CONTACTS OF PS 1 ON RELAY
- MOTOR POWER LIMITED BY SERIES RESISTOR TO BRIDGE

STOW BLOCK DIAGRAM (SIMILAR TO VAS STOW DESIGN)

HUGHES
SANTA BARBARA RESEARCH CENTER
a subsidiary

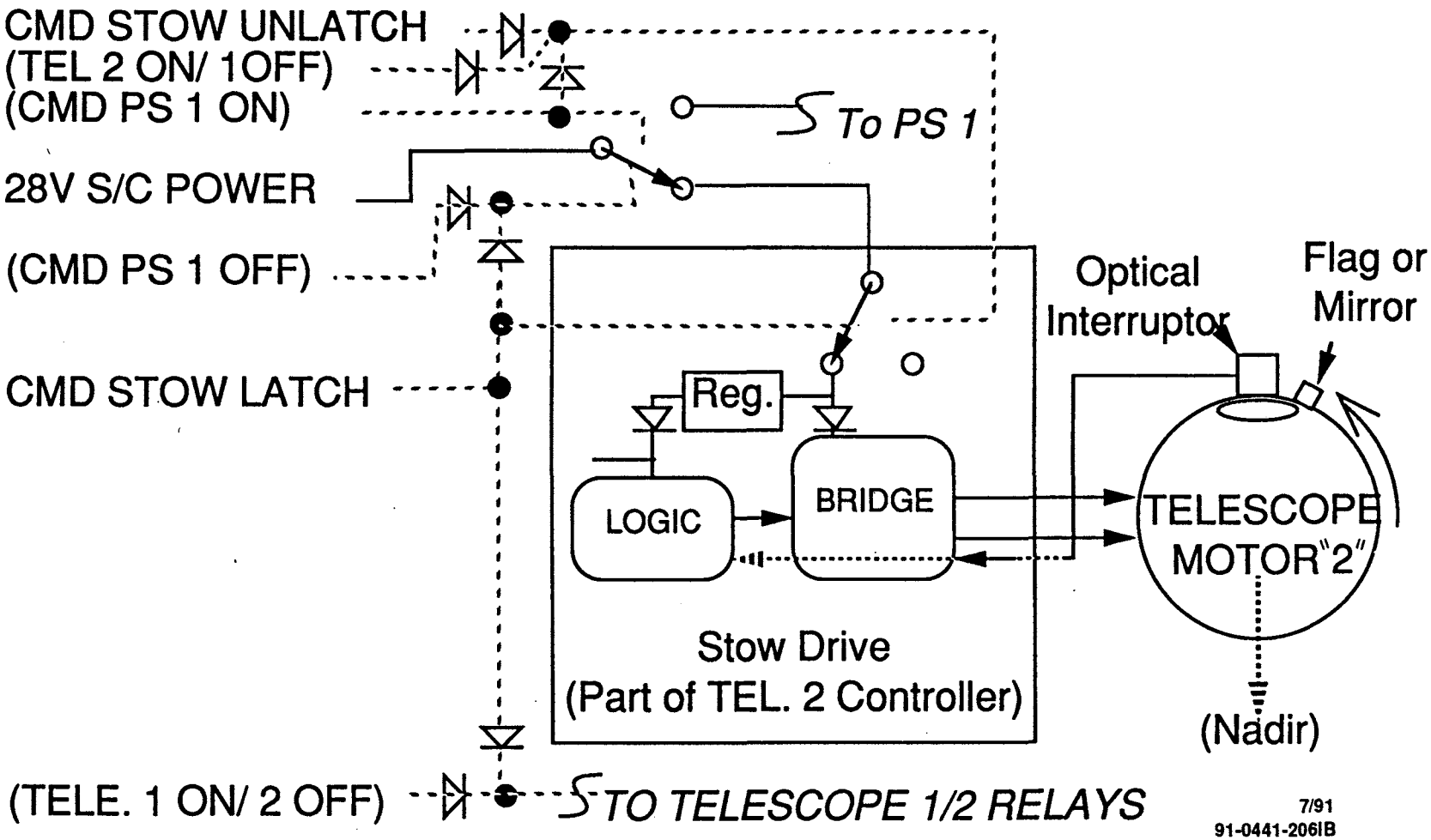

7/91
91-0441-206IB

TESTING

6/91
91-0441-206J

ELECTRONIC ASSEMBLIES TO BE ENVIRONMENTALLY TESTED

HUGHES

SANTA BARBARA RESEARCH CENTER
a subsidiary

- TEMPERATURE TESTING
  - CIRCUIT CARD ASSEMBLIES (CCA)
    - SAME AS ETM 10 CYCLES –35 TO +60°C
  - ELECTRONICS MODULE
    - SAME AS ETM 4 CYCLES –30 TO +55°C WITH PERFORMANCE TESTS AT 0°C AND 50°C
    - VACUUM TEST –20°C TO +45°C WITH PERFORMANCE TEST AT +15°C AND +40°C (TBR)

PROPOSED THERMAL TEST SEQUENCE

HUGHES

SANTA BARBARA RESEARCH CENTER
a subsidiary

CIRCUIT CARD ASSEMBLY (CCA) IN PROCESS THERMAL TEST SEQUENCE

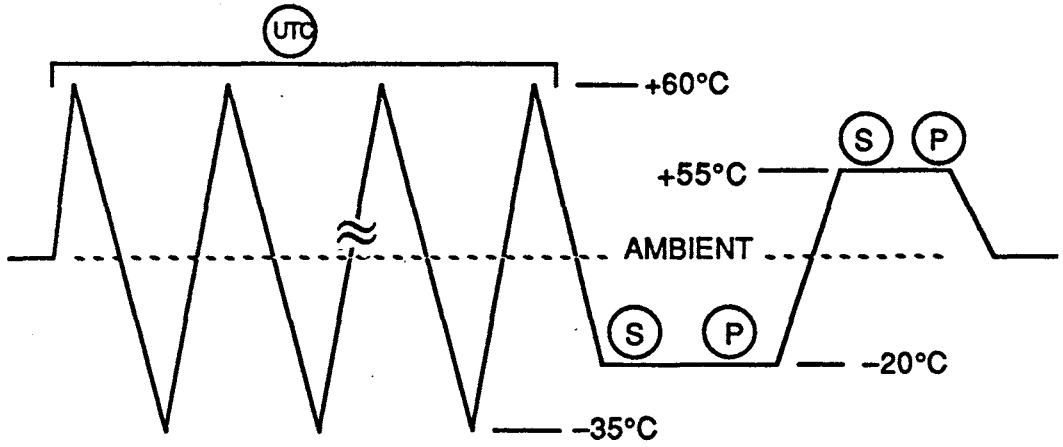

(P) FULL PERFORMANCE TEST PER PARAGRAPH _____

(UTC) AT LEAST 10 CYCLES OF UNPOWERED THERMAL CYCLING

(S) MINIMUM ONE-HOUR SOAK

NOTES: TEMPERATURES SPECIFIED ARE UNIT-CASE TEMPERATURE (±2°C TOLERANCE)
THERMAL CYCLING MAY BE INTERRUPTED AT ANY TEMPERATURE ABOVE 30°C

7/91
91-0441-206L

PROPOSED FLIGHT MODULE ACCEPTANCE TEMP TEST SEQUENCE

HUGHES

SANTA BARBARA RESEARCH CENTER
a subsidiary

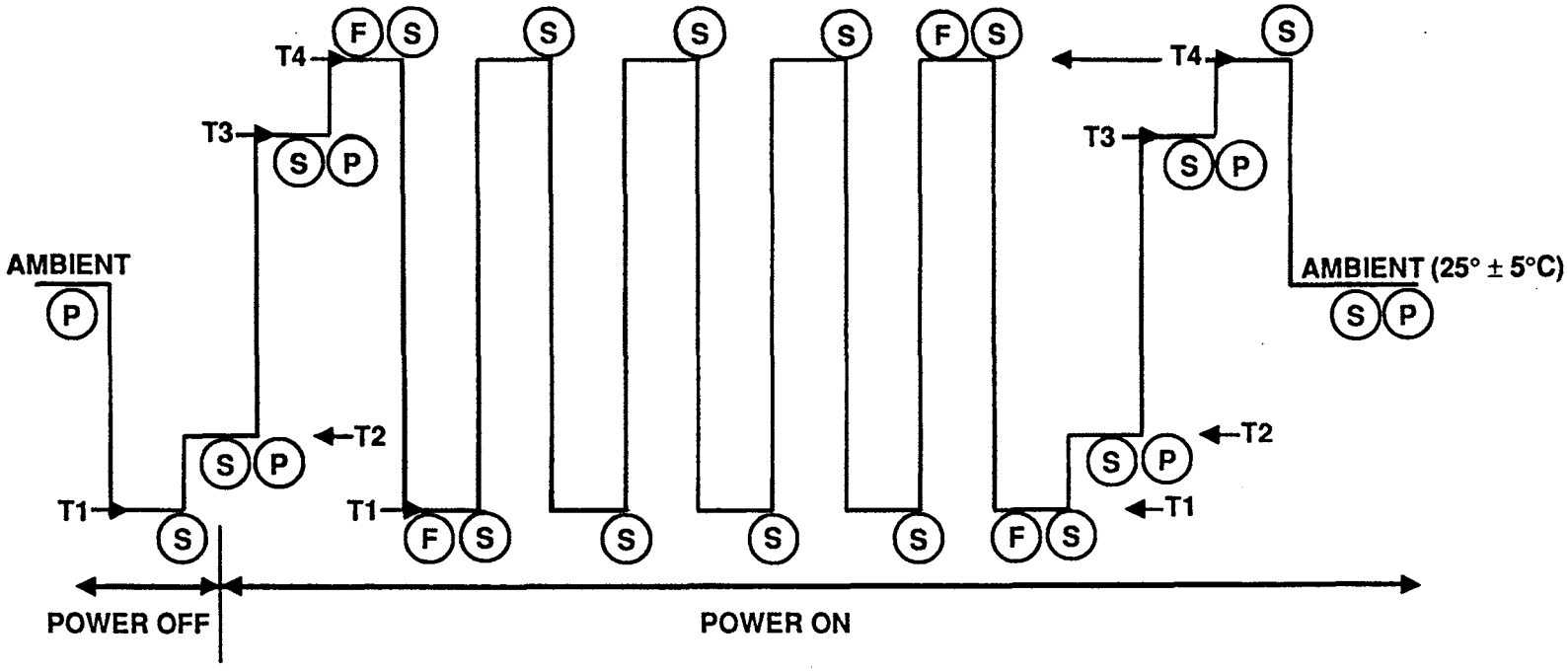

P = FULL UNIT PERFORMANCE TEST

S = 1-HOUR TEMPERATURE SOAK

F = TURN-ON FUNCTIONAL TEST

	FLIGHT	VACUUM
T1	-30° ± 2°C	-20° ± 3°C
T2	0° ± 2°C	+15° ± 3°C
T3	+50° ± 2°C	+40° ± 3°C
T4	+55° ± 2°C	+45° ± 3°C

7/91
91-0441-206M

OPEN ISSUES

HUGHES

SANTA BARBARA RESEARCH CENTER
a subsidiary

- POWER SUPPLY MAKE/BUY DECISION
- COMMAND/TELEMETRY: LOCATION OF INTERFACE CIRCUIT
- AGREEMENT ON COMMAND/TELEMETRY SIGNALS
- TILT MOTOR MECHANISM DRIVE

ELECTRONICS MODULE DESIGN

STEVE HERNANDEZ

7/91
91-0441-238

ELECTRONICS MODULE CONCEPT

HUGHES

SANTA BARBARA RESEARCH CENTER
a subsidiary

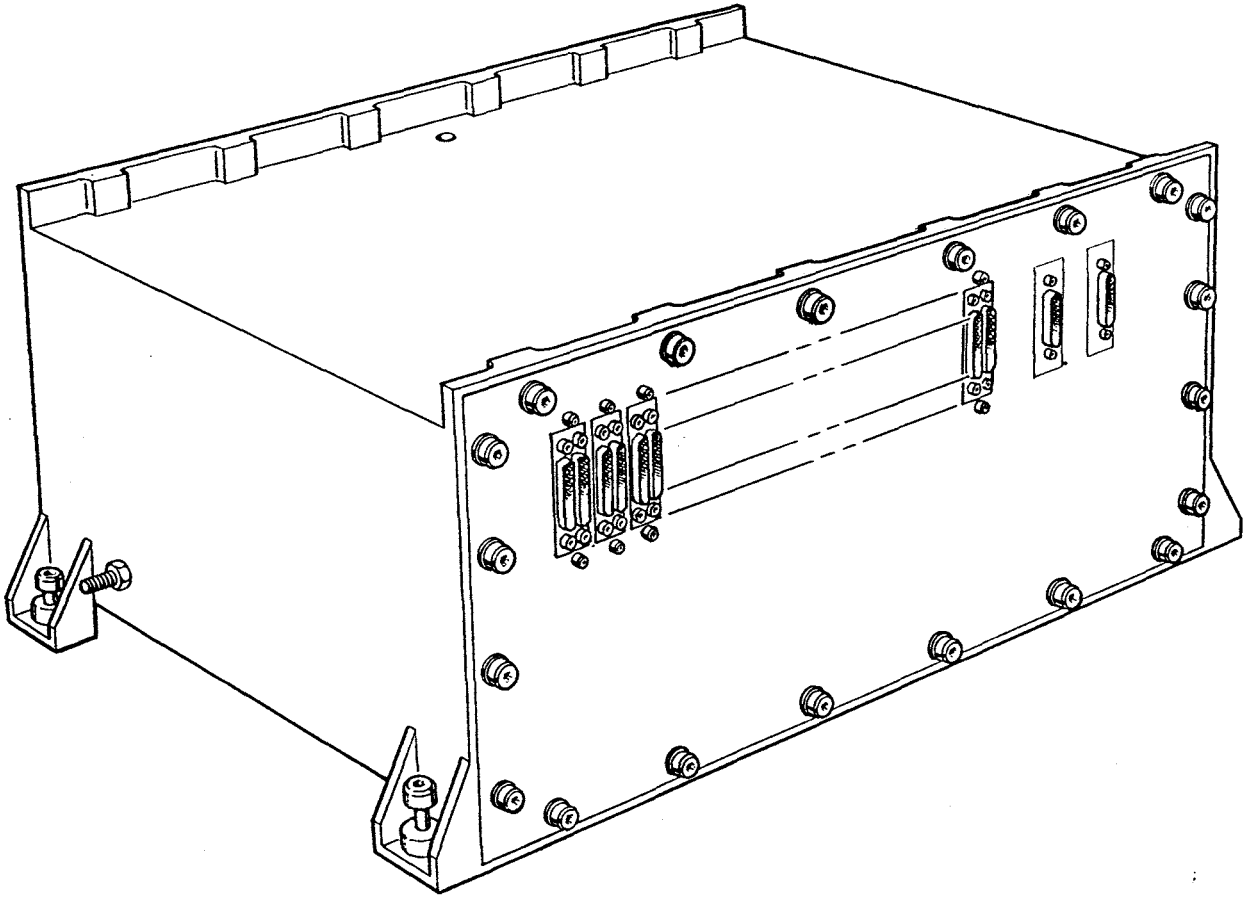

7/91
91-0441-239

REQUIREMENTS

HUGHES

SANTA BARBARA RESEARCH CENTER
a subsidiary

- STRUCTURE
- WEIGHT AND VOLUME
- TESTING
- ACCESSIBILITY
- REPAIRABILITY
- SHIELDING
  - RADIATION
  - EMI
  - RFI
- SPACECRAFT MOUNTING

MODULE DESIGN TAILORED TO SeaWiFS MISSION

HUGHES

SANTA BARBARA RESEARCH CENTER
a subsidiary

- ELECTRICAL
  - REDUCE CROSSTALK
  - MINIMIZE COHERENT NOISE
  - CONTROL TEMPERATURE
- MECHANICAL
  - SIMPLIFY STRUCTURE AND ASSEMBLY
  - MINIMIZE WEIGHT AND VOLUME
  - MINIMIZE COMPLEXITY OF WIRING
  - STANDARDIZE CCA DESIGN
  - SURFACE MOUNTED TECHNOLOGY
  - OSC SUPPLIED COMMAND/TELEMETRY MODULE LOCATED OUTSIDE OF ELECTRONICS MODULE

ELECTRONICS MODULE DESIGN DRIVEN BY PRODUCIBILITY CONCERNS

HUGHES

SANTA BARBARA RESEARCH CENTER
a subsidiary

- AVOID EXOTIC MATERIALS AND PROCESSES
- UTILIZE MODULAR CONCEPTS TO FACILITATE ASSEMBLY AND TEST
- HOUSING FABRICATION TECHNIQUES CONSIDERED
  - MACHINING
  - DIPBRAZE – MOST PROBABLE
  - CASTING
- STANDARDIZE PLUG-IN CIRCUIT CARD DESIGN
  - REDUCE NUMBER OF DESIGNS
  - AVERAGE NUMBER OF LAYERS IS 8
  - STANDARD LINE WIDTH/SPACING IS 0.010/0.010
  - 0.06 THICK POLYIMIDE BOARDS
- SURFACE MOUNTED COMPONENTS
  - INCREASES DENSITY BY USING SURFACE MOUNTED COMPONENT
  - REDUCES NUMBER OF BOARDS
  - MINIMIZE PWB PLATED HOLES – HIGHER RELIABILITY
- BACK PLANE
  - WIRE WRAP – MINIMIZE SCHEDULE RISK

DESIGN ALLOWS EASY ACCESS TO ALL AREAS

HUGHES

SANTA BARBARA RESEARCH CENTER
a subsidiary

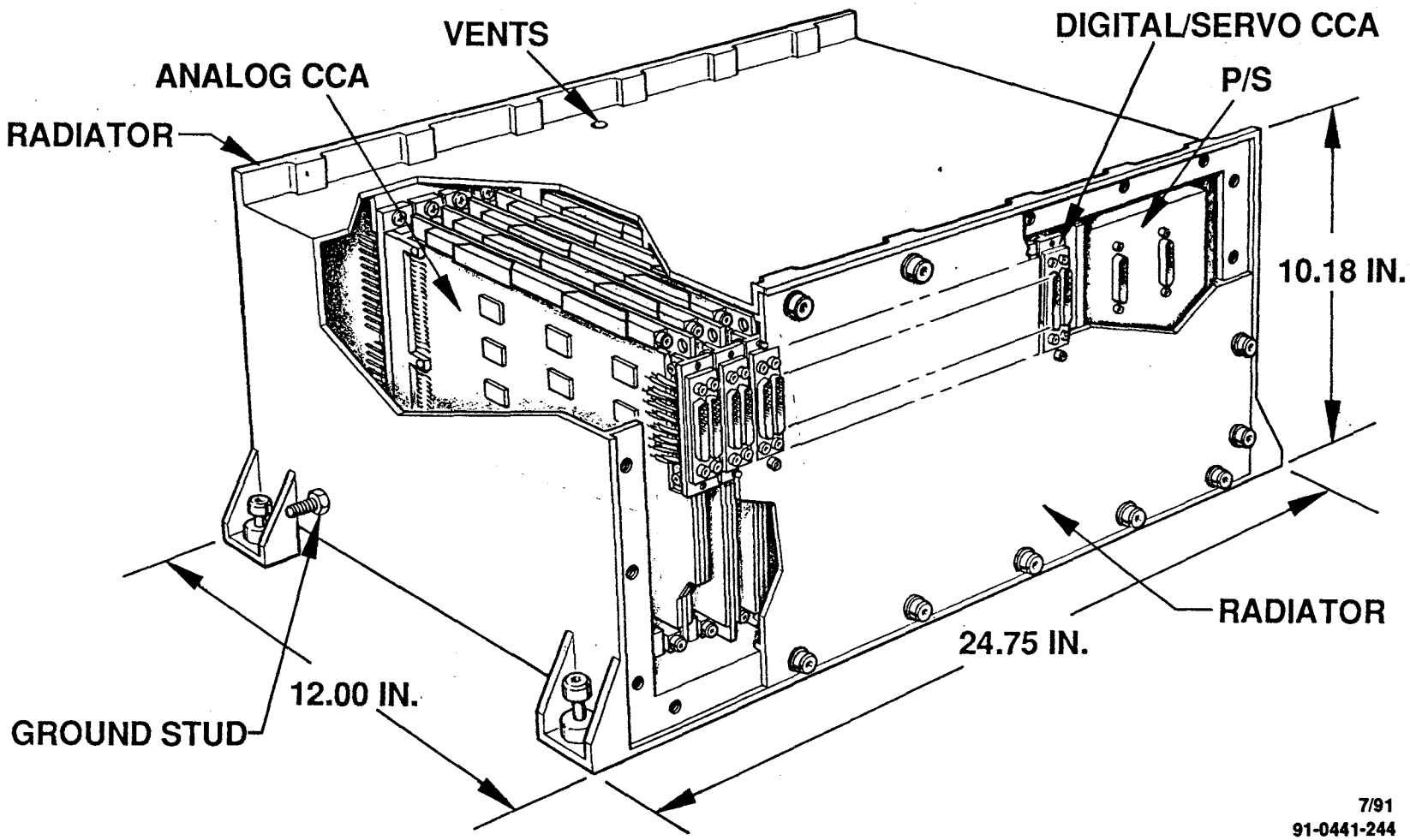

7/91
91-0441-244

INITIAL CIRCUIT CARD ASSEMBLY DEFINITION AND POWER DISSIPATION ESTIMATE

HUGHES

SANTA BARBARA RESEARCH CENTER
a subsidiary

QTY	REF DES	DESCRIPTION	ESTIMATED POWER (W)
4	A1-A4	ANALOG/TDI	24
	A5	SPARE	
1	A6	TELEMETRY BUFFER	1
1	A7	OSCILLATOR & TIMING	2
	A8	SPARE	
1	A9	SERVO MECH. DRIVES	15
1	A10	ANGULAR MOMENTUM AND TILT DRIVES	7
1	A11	COMMAND/TELEMETRY COUPON (SUPPLIED BY OSC) – TBR	TBD
1	A12	TEST	< 1
1	PS	POWER SUPPLY	20

CIRCUIT CARD ASSEMBLY USES TWO PRINTED WIRING BOARDS BONDED TO A COMMON HEATSINK

HUGHES

SANTA BARBARA RESEARCH CENTER
a subsidiary

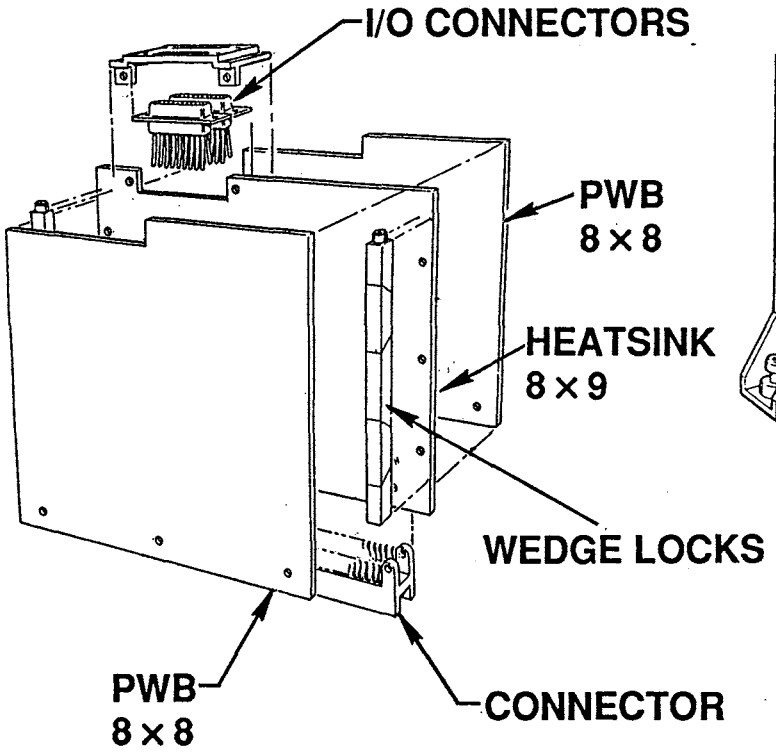

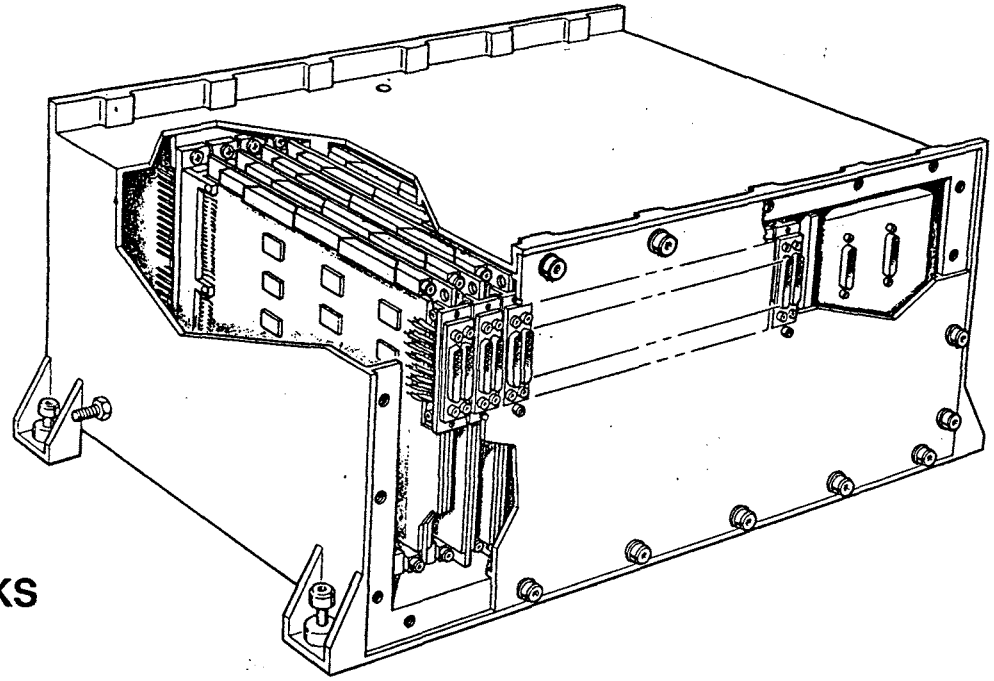

7/91
91-0441-246

CONNECTOR TYPES UNDER EVALUATION

HUGHES

SANTA BARBARA RESEARCH CENTER
a subsidiary

High Reliability, Military D Subminiature

Solder Cup

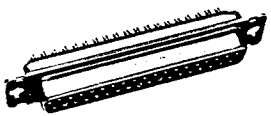

Crimp

Printed Circuit

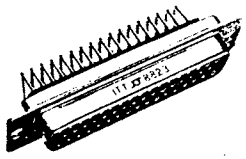

Conforms to MIL-C-55302/120 thru 123

MD53-02E/RMD53-02E
Receptacle, Box Mounting, Environmental
(Mates with Plug, Type 06)

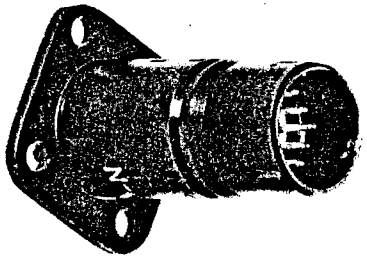

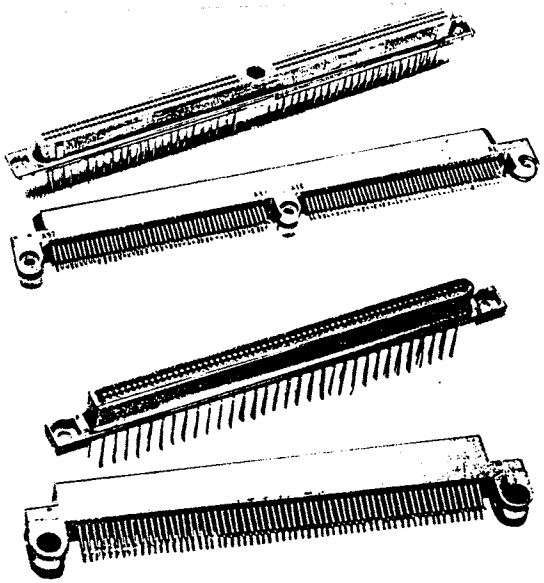

Dimensions - 304 Position Connector

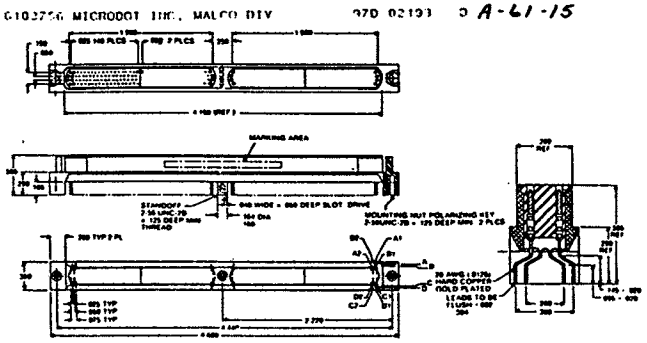

SURFACE MOUNT — MOTHERBOARD
P/N 095-9091-3002

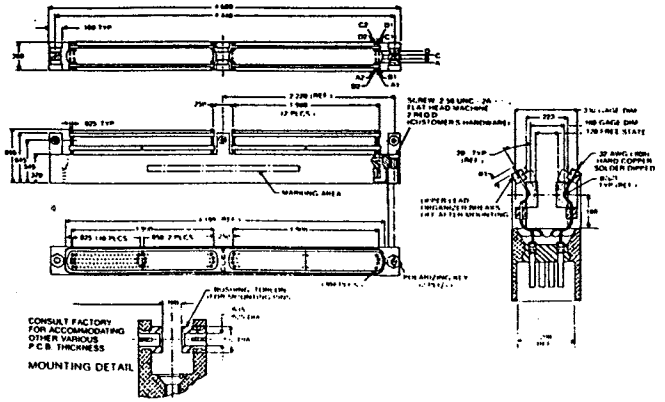

7/91
91-0441-247

ELECTRONIC MODULE MECHANICAL CHARACTERISTICS MEET SeaStar REQUIREMENTS

HUGHES

SANTA BARBARA RESEARCH CENTER
a subsidiary

	ESTIMATE (POUNDS)	NOT TO EXCEED (POUNDS)
• VOLUME – CUBIC INCHES		
• 10.18 × 12.00 × 24.75 = 3,023		
• WEIGHT (ESTIMATE)		
• HOUSING ASSEMBLY (0.06 THICK AL ALY)	9.4	
• PWB ASSEMBLIES (10)	20.3	
• POWER SUPPLY	6.6	
• WIRING AND CONNECTORS	3.5	
• SUBASSEMBLIES AND MOUNTING HARDWARE	2.2	
TOTAL	42.0	50.0
• INTERCONNECT CABLES (10)	5.9	5.0
TOTAL WEIGHT	47.9	55.0
• OSC SUPPLIED COMMAND/TELEMETRY MODULE	1.5 (EST.) – TBR	

STRUCTURE DESIGNED TO PROVIDE ADEQUATE RADIATION SHIELDING

HUGHES

SANTA BARBARA RESEARCH CENTER
a subsidiary

ALUMINUM WALL THICKNESS (IN.)	TOTAL DOSE (kRADS) 5 YEARS	TOTAL DOSE (kRADS) 10 YEARS	HOUSING WT. DELTA
0.060	60	120	–
0.100	25	50	6.2
0.150	18	36	14.1
0.200	14	28	21.9
0.250	10	20	29.7
0.500	7	14	68.9

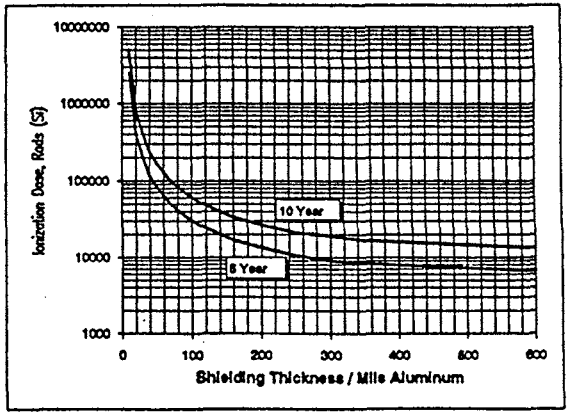

SEASTAR RADIATION DOSE-DEPTH CURVE

- INITIAL DESIGN IS BASED ON 0.06-IN. THICK HOUSING WALLS
- ADDITIONAL LOCALIZED SHIELDING WILL BE ADDED AS REQUIRED FOR COMPONENTS WITH RADIATION DOSE THRESHOLDS LESS THAN 120 kRADS
- STRUCTURAL RAY TRACK ANALYSIS WILL BE PERFORMED FOR CRITICAL DEVICE LOCATIONS PRIOR TO ADDING ADDITIONAL SHIELDING

MECHANICAL STRUCTURE INCORPORATES EMI SHIELDING

HUGHES

SANTA BARBARA RESEARCH CENTER
a subsidiary

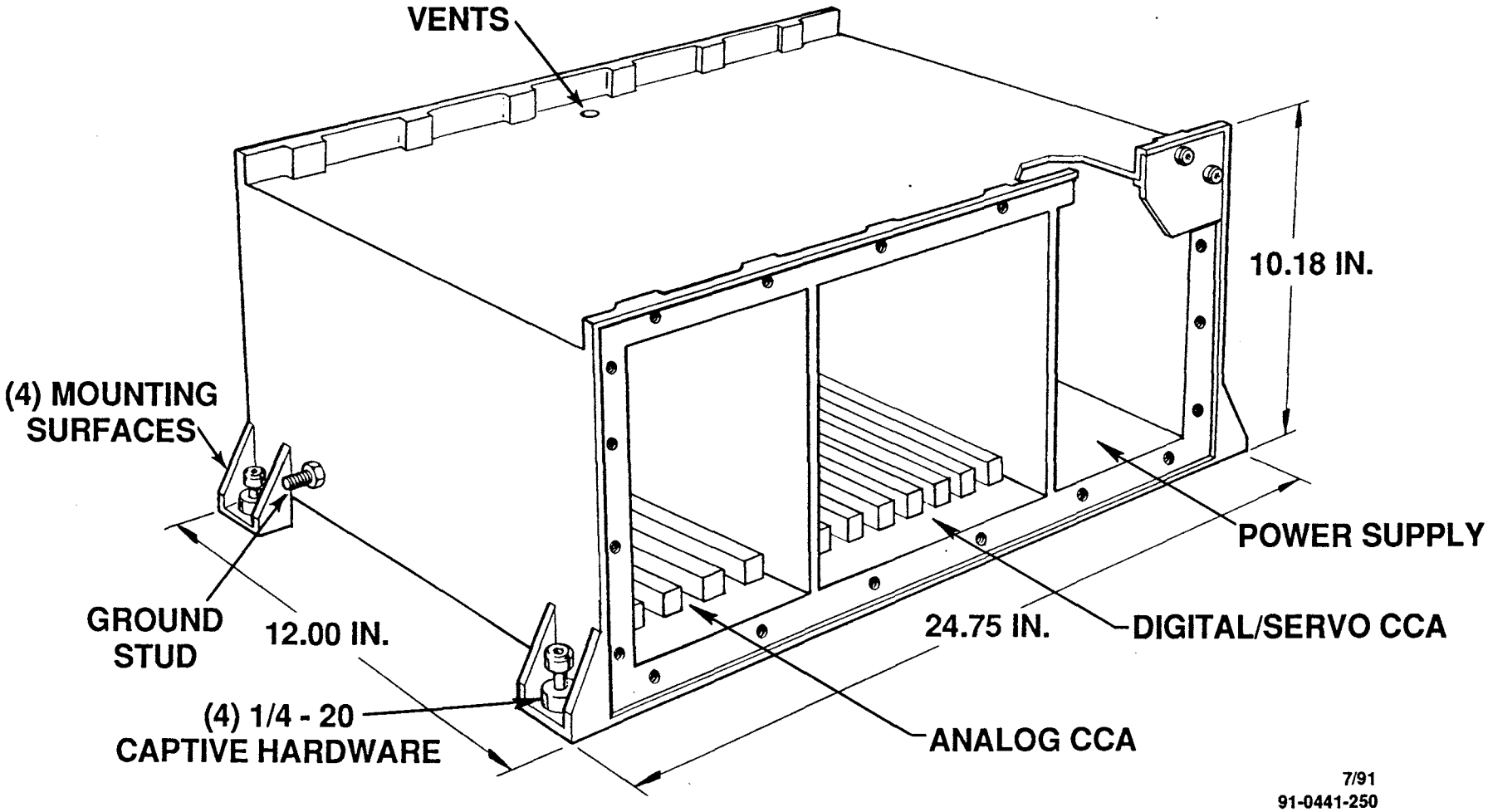

7/91
91-0441-250

FULL ACCESS TO BACKPLANE WIRING

HUGHES

SANTA BARBARA RESEARCH CENTER
a subsidiary

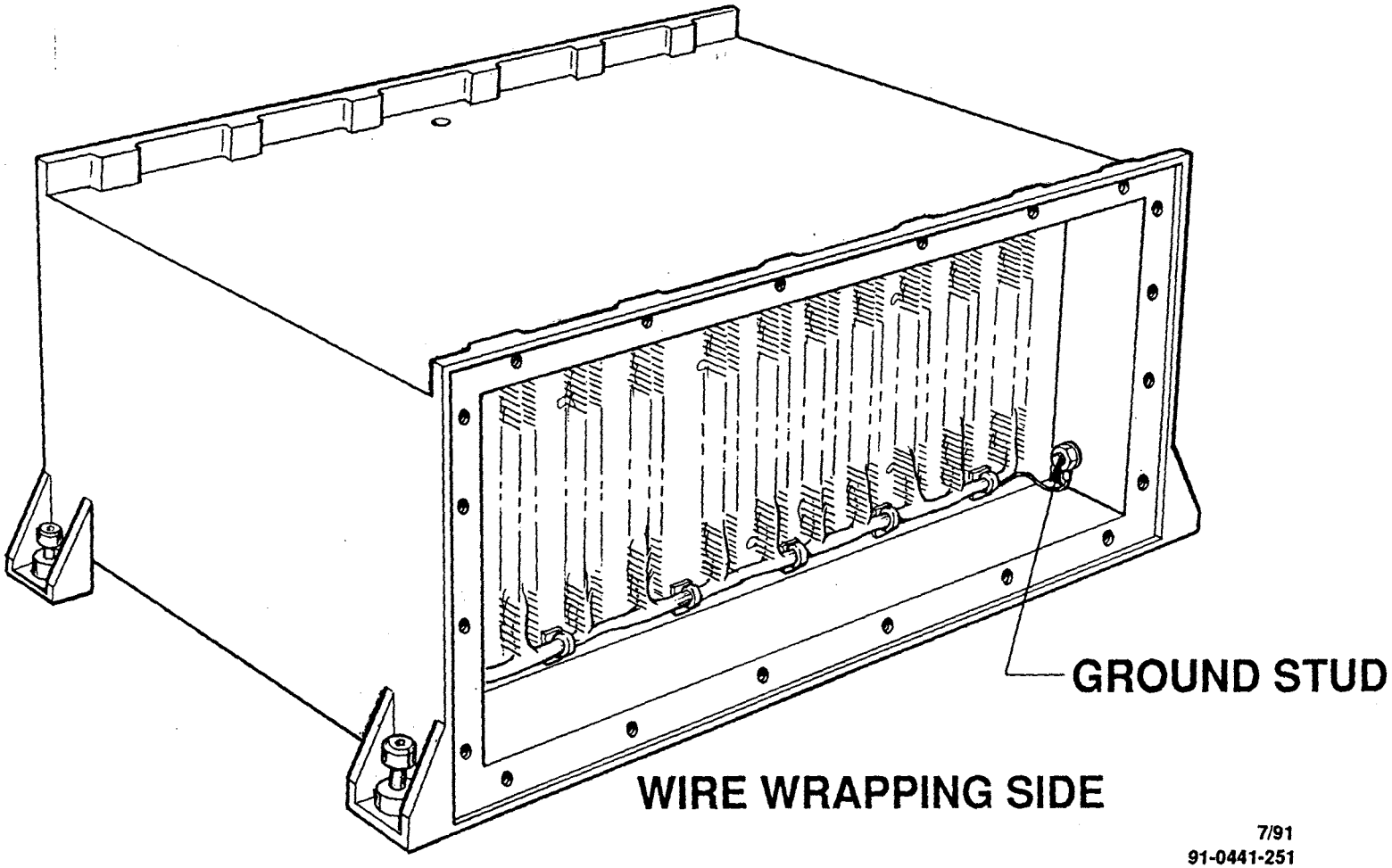

7/91
91-0441-251

INSTRUMENT INTERCONNECT WIRE ROUTING TO BE COORDINATED WITH OSC

HUGHES

SANTA BARBARA RESEARCH CENTER
a subsidiary

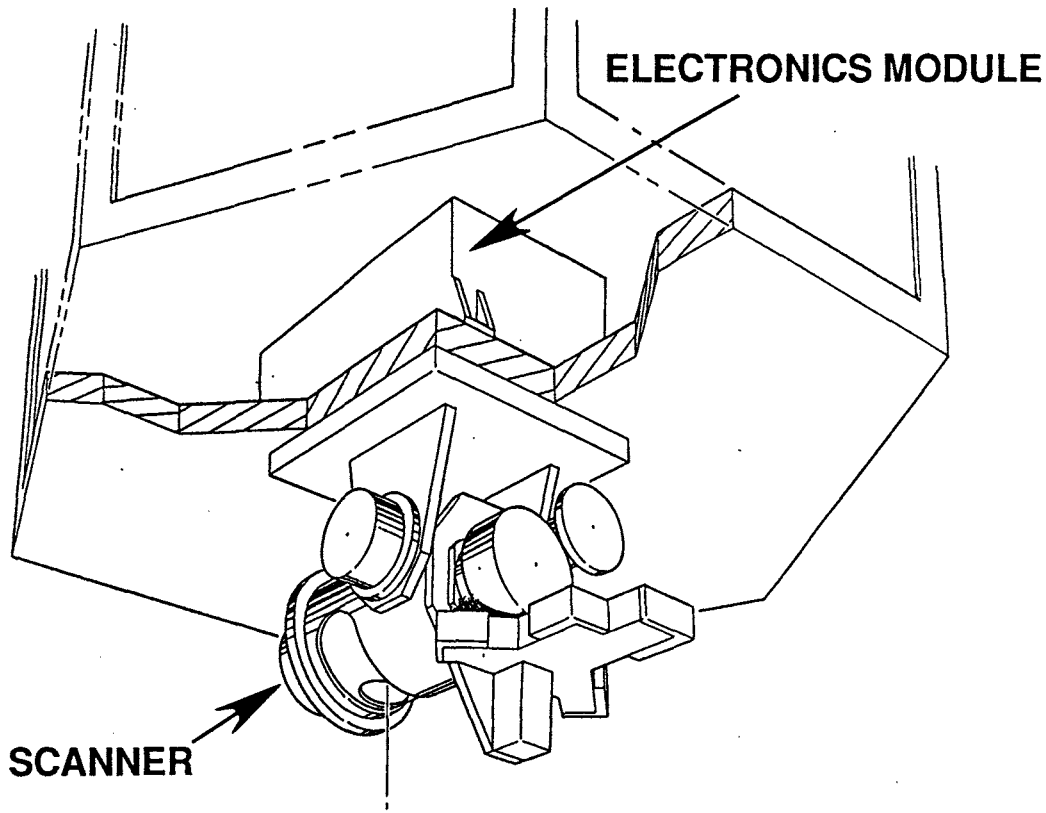

7/91
91-0441-252

MODULE TRANSPORTATION CONTAINER

HUGHES

SANTA BARBARA RESEARCH CENTER
a subsidiary

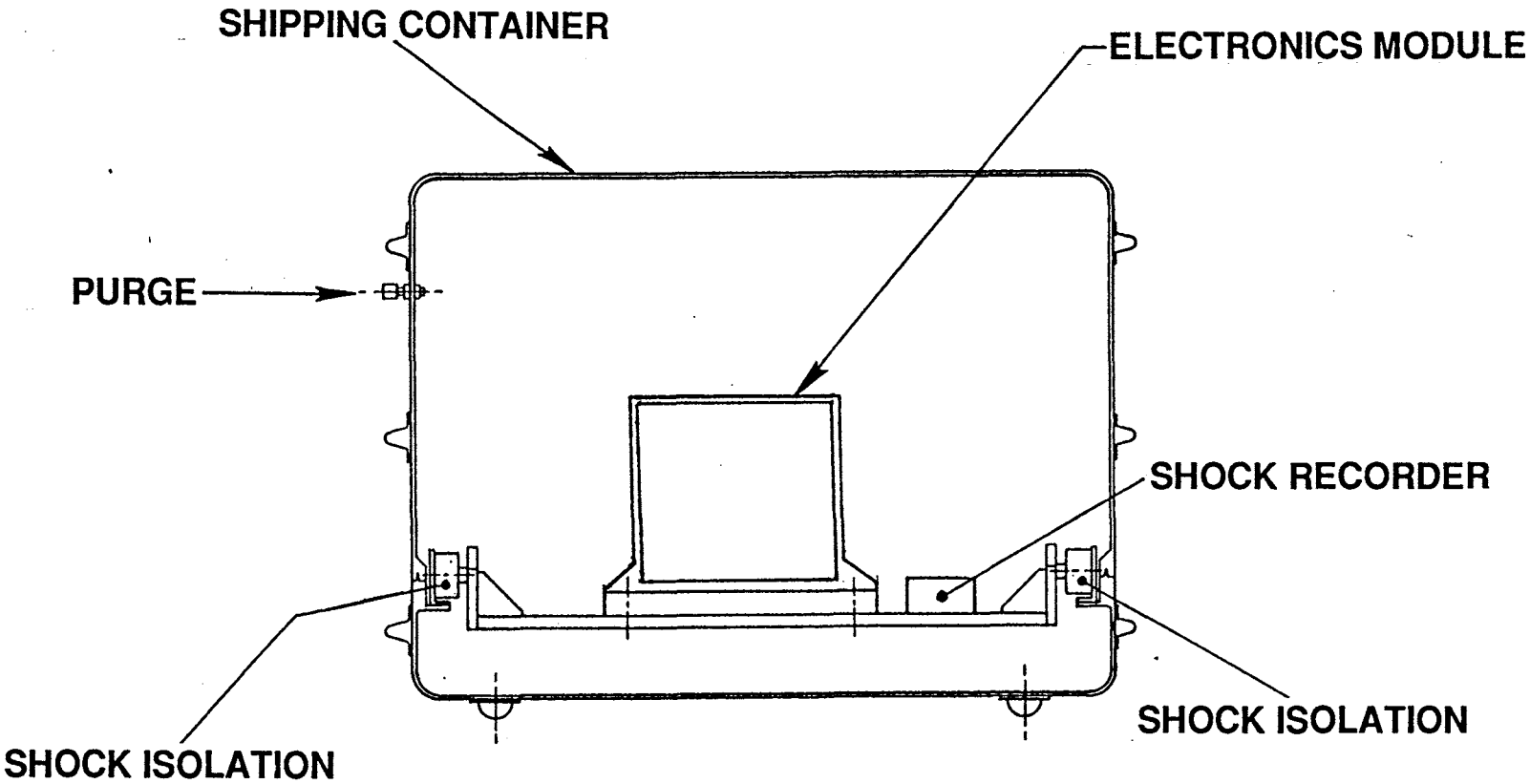

7/91
91-0441-253

• STRUCTURAL ANALYSIS
• THERMAL ANALYSIS

PAUL BORTFELDT

7/91
91-0441-254

STRUCTURAL ANALYSIS

7/91
91-0441-73

STRUCTURAL ANALYSIS REQUIREMENTS

HUGHES

SANTA BARBARA RESEARCH CENTER
a subsidiary

- SeaWiFS DESIGNED FOR PEGASUS LAUNCH
- SeaWiFS SHALL BE DESIGNED TO MEET ALL PERFORMANCE REQUIREMENTS FOLLOWING EXPOSURE TO FLIGHT/LAUNCH ENVIRONMENTS
  - RANDOM VIBRATION
  - PYROSHOCK
  - QUASI-STATIC ACCELERATION
  - ACOUSTICS
- STRUCTURAL DESIGN FACTORS OF SAFETY
  - MAN-RATED EVENTS: 1.50 (ULTIMATE) 1.25 (YIELD)
  - NONMAN-RATED EVENTS: 1.25 (ULTIMATE) 1.10 (YIELD)

ANALYTICAL APPROACH USES FAMILIAR FEA TECHNIQUES

HUGHES

SANTA BARBARA RESEARCH CENTER
a subsidiary

- CREATE AND EVALUATE NASTRAN FEA MODELS OF THE SCANNER AND ELECTRONICS MODULE
- EXCITATIONS (PER SBRC SPEC 151651)
  - RANDOM VIBRATION (ACCEPTANCE LEVEL)
  - QUASI-STATIC ACCELERATION
  - PYROSHOCK (CURVE D: PAYLOAD SHELF)
- PERFORM MODAL ANALYSIS
- DEVELOP REFINED SUBASSEMBLY AND COMPONENT MODELS AS NEEDED
- PERFORM MANUAL CALCULATIONS FOR SOME COMPONENT STRESS DETERMINATIONS, MASS AND SECTION PROPERTIES, DYNAMIC DISTURBANCES/ANGULAR MOMENTUM, THERMOELASTIC STRESS ANALYSIS, ETC.

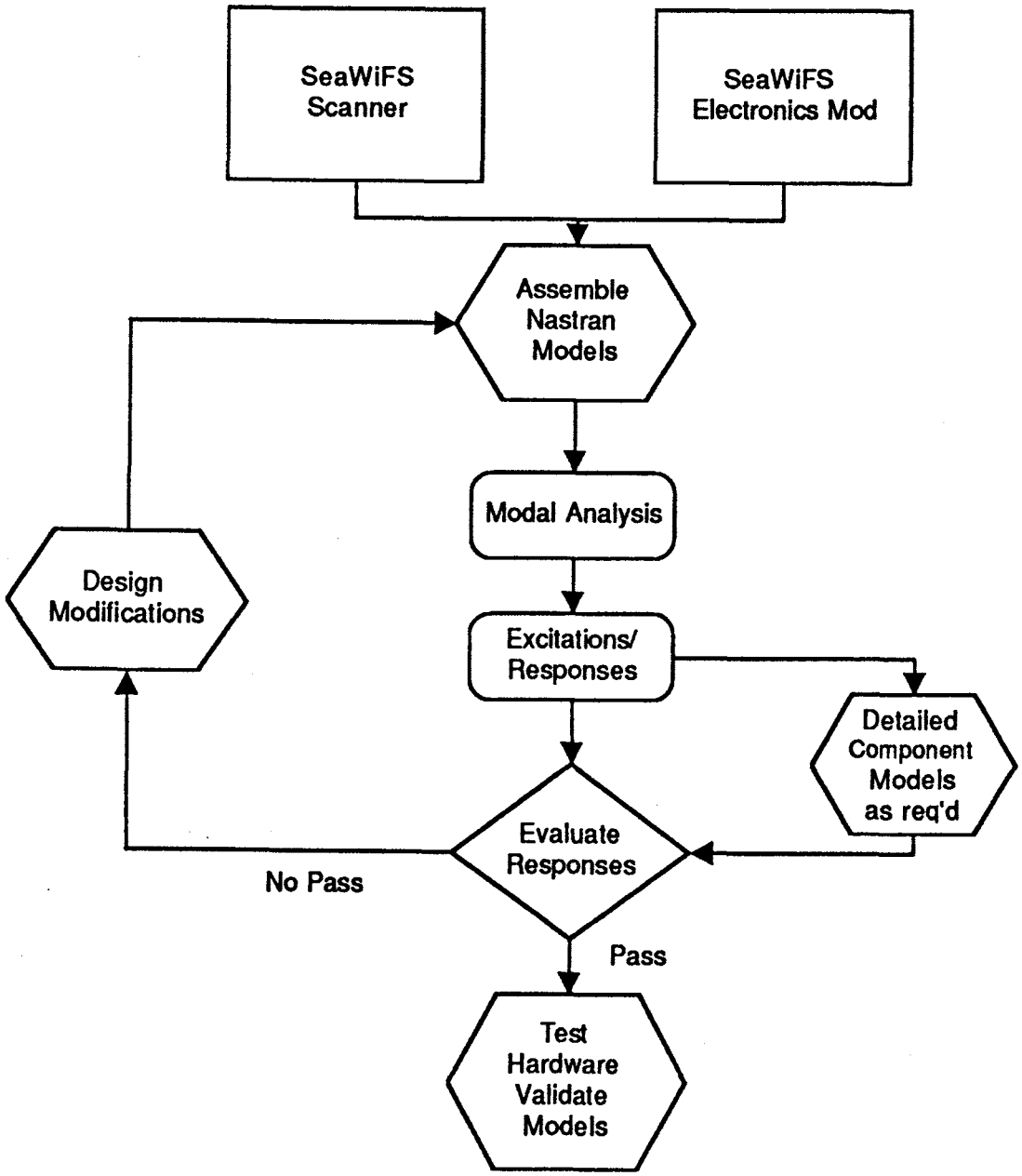

HUGHES

SANTA BARBARA RESEARCH CENTER
a subsidiary

ITERATIVE STRUCTURAL ANALYSIS TECHNIQUE ASSURES STRUCTURAL INTEGRITY

7/91
91-0441-74A

FINITE ELEMENT ANALYSIS WILL BE VALIDATED BY TEST

HUGHES

SANTA BARBARA RESEARCH CENTER
a subsidiary

- VALIDATE SYSTEM-LEVEL NASTRAN MODELS :
  - COMPARE RANDOM VIBRATION PREDICTIONS WITH HARDWARE TEST RESULTS
  - COMPARE I-G SINE SURVEYS WITH PREDICTIONS TO VERIFY NATURAL FREQUENCIES, RESPONSE AND DAMPING
  - MODAL SURVEY OF FLIGHT HARDWARE IF POSSIBLE
  - MANUAL CHECKS

SHOCK RESPONSE SPECTRUM IS HIGH AT LOWER FREQUENCIES (TBR)

HUGHES

SANTA BARBARA RESEARCH CENTER
a subsidiary

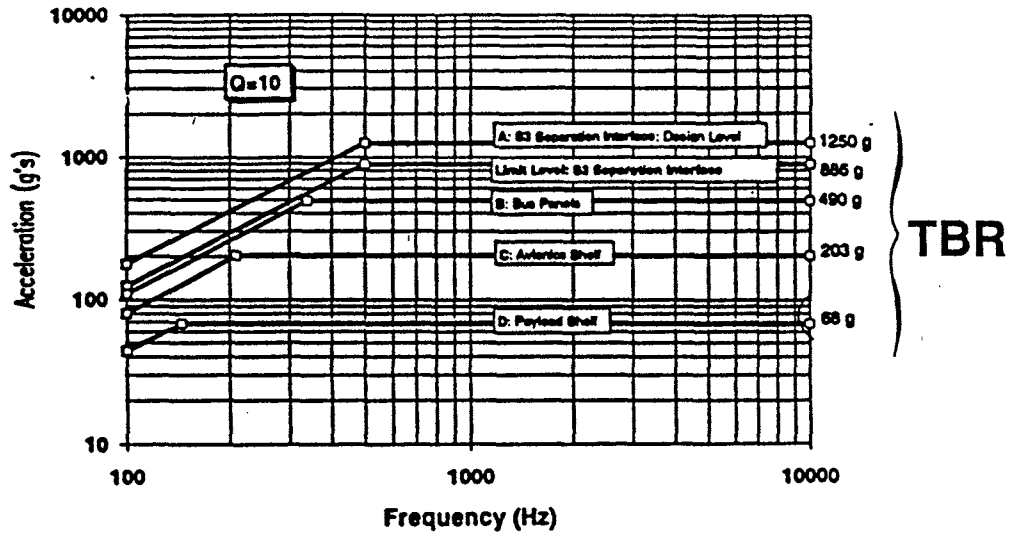

- LEVELS ARE RELATIVELY HIGH BELOW 200 Hz
- SIGNIFICANT STRUCTURAL MODES LIKELY BETWEEN 80 AND 200 Hz
- OTHER LAUNCH EXCITATIONS (RANDOM, QUASI STATIC ACCEL, ETC.) APPEAR REASONABLE

THERMAL ANALYSIS

7/91
91-0441-76

THERMAL REQUIREMENTS ARE WITHIN CONVENTIONAL CAPABILITIES

HUGHES

SANTA BARBARA RESEARCH CENTER
a subsidiary

- SCANNER AND ELECTRONICS MODULE (EM) SHALL OPERATE IN THERMAL ISOLATION FROM THE S/C
  - SCANNER/EM MOUNT CONDUCTANCE < 0.8 W/°C EACH
  - SCANNER/EM GROUND STRAPS < 0.5 W/°C EACH
  - EM TO SPACECRAFT CABLING < 0.3 W/°C
- SCANNER INTERFACE TEMPERATURE RANGE:
  - OPERATING: 0°C TO 35°C
  - NONOPERATING: -30°C TO +50°C
- EM INTERFACE TEMPERATURE RANGE:
  - OPERATING: 0°C TO 45°C
  - NONOPERATING: -30°C TO +50°C

COMPONENT TEMPERATURES

HUGHES

SANTA BARBARA RESEARCH CENTER
a subsidiary

COMPONENT		DESIGN GOAL (OPERATIONAL) °C	MAX. RANGE (OPERATIONAL) °C	MAX. RANGE * (NON-OPERATIONAL) °C	TEST RANGE °C
EM	PWBs	0/40	-30/60	-55/90	-35/60
	Power supply	0/40	-30/60 (-55/90) transient	-55/90	-35/60
SCANNER	Preamps	0/40	-20/60	-40/80	-35/60
	Detectors	10/30	-20/40	TBD	TBD
	Motors/ Encoders	5/45	-5/55	-30/60	-5/55
	Filters	10/30	TBD	TBD	TBD

* Scanner & Electronics Module Non-Operational range limited to -30/+50 °C

RELATIVELY CONSTANT POWER DISSIPATIONS REDUCES TEMPERATURE VARIATIONS

HUGHES

SANTA BARBARA RESEARCH CENTER
a subsidiary

CURRENT POWER ESTIMATES (WATTS)

SUBSYSTEM	SUNLIGHT (DATA COLLECTION)	ECLIPSE	ORBIT AVERAGE 40% DUTY
SCANNER	23	15	18.2
EM	64	25	40.6
TOTAL	87	40	58.8

SCANNER ORBITAL THERMAL ENVIRONMENT IS SIMILAR TO ETM

HUGHES

SANTA BARBARA RESEARCH CENTER
a subsidiary

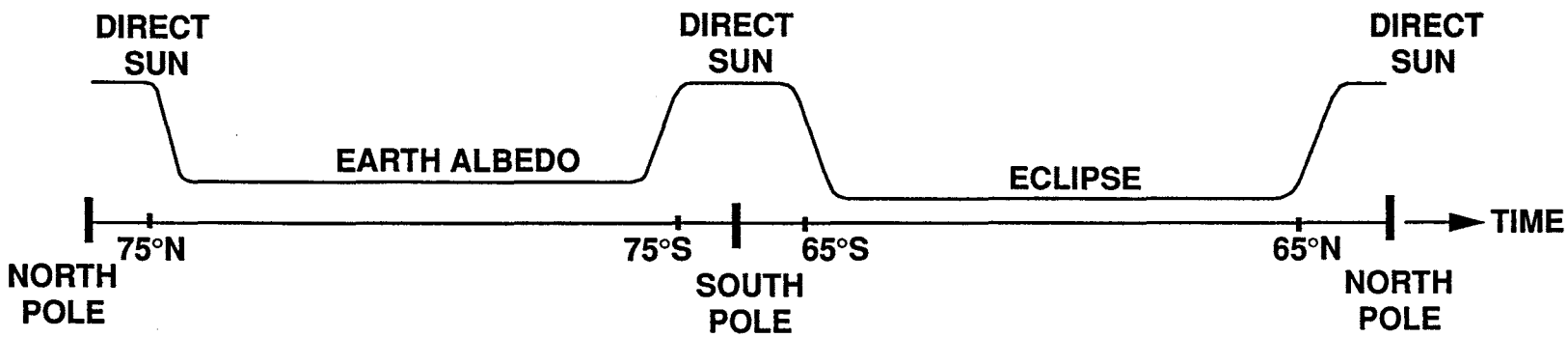

- INSTRUMENT RECEIVES DIRECT SUNLIGHT FOR 25% OF THE ORBIT

7/91
91-0441-80

ELECTRONICS MODULE ORBITAL THERMAL ENVIRONMENT IS RELATIVELY STABLE

HUGHES

SANTA BARBARA RESEARCH CENTER
a subsidiary

- NO DIRECT SOLAR EXPOSURE REGARDLESS OF SEASON
- MAJORITY OF EARTH IR AND ALBEDO BLOCKED BY NADIR SHELF. ABSORBED ENERGY ON WHITE-PAINTED RADIATORS NEGLECTING REFLECTIONS:

  ALBEDO 1.0W
  EARTH IR 3.0W } APPROXIMATE ORBIT AVERAGE

- ENERGY TRANSFER TO/FROM SURROUNDING S/C SURFACES (SOLAR PANELS, BULKHEADS, AVIONICS, ETC.) TBD. DEPENDS ON SURFACE PROPERTIES AND TEMPERATURES.

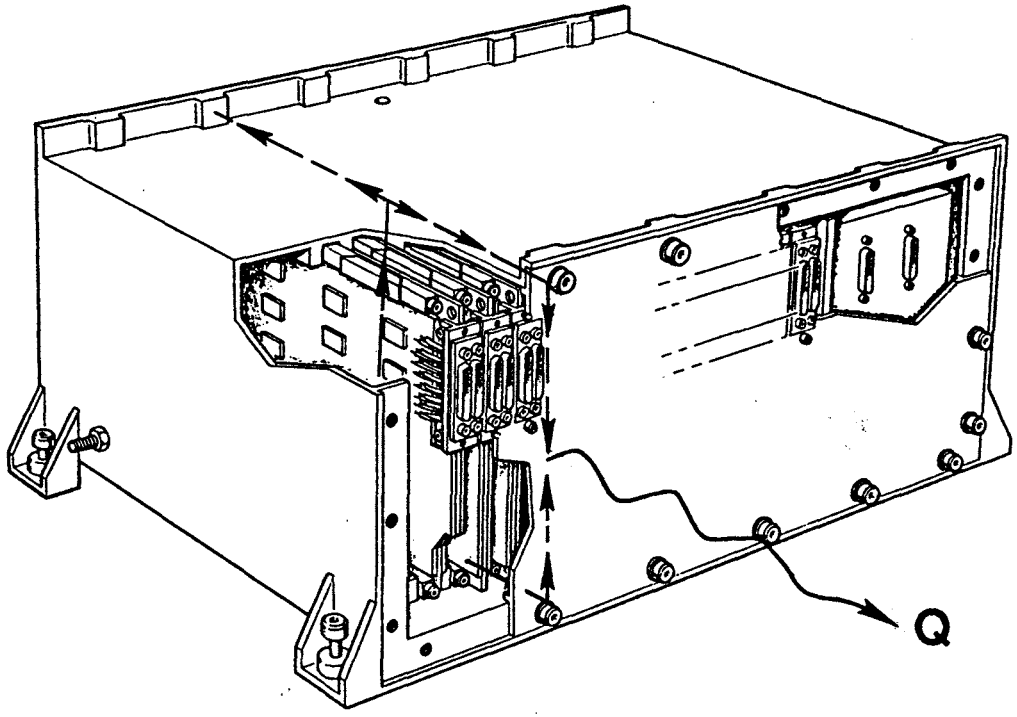

- TYPICAL CARD GUIDE CONDUCTANCE = 2.6 W/°C PER CARD EDGE
- AVERAGE THERMAL GRADIENT BETWEEN CARD EDGE AND RADIATOR PANELS ≈ 11°C

HUGHES

SANTA BARBARA RESEARCH CENTER
a subsidiary

ELECTRONICS MODULE HEAT PATH

7/91
91-0441-81A

THERMAL CONTROL SYSTEM EMPLOYS CONVENTIONAL SPACECRAFT TECHNIQUES

HUGHES

SANTA BARBARA RESEARCH CENTER
a subsidiary

PRINCIPAL HEAT DISSIPATION MODE IS BY RADIATION TO SPACE

- MLI BLANKETS AND LOW EMISSIVITY SURFACES
  - SCANNER – LOW EMISSIVITY SURFACES AND BLANKETS WHERE PRACTICAL
  - ELECTRONICS MODULE (EM) – LOW EMISSIVITY SURFACES ON TOP AND TWO END FACES. SIDE PANELS PAINTED WHITE OR PARTIALLY BLANKETED AS REQUIRED.
- RADIATOR PATCHES PROVIDED ON SCANNER AND EM SIDE PANELS
  - WHITE PAINT
    - EOL SOLAR ABSORPTANCE $\approx$ 0.35
    - EOL EMISSIVITY $\approx$ 0.88
- SCANNER AND EM THERMALLY ISOLATED FROM NADIR SHELF
- MAKEUP HEATERS IN SCANNER AND EM TBD WATTS, ON/OFF CONTROL LOGIC

CINDA USED TO PREDICT THERMAL PERFORMANCE

HUGHES

SANTA BARBARA RESEARCH CENTER
a subsidiary

- CREATE CINDA FINITE DIFFERENCE MODELS OF SCANNER AND ELECTRONICS MODULE
  - TRANSIENT AND STEADY STATE RUNS
    - HOT CASE - (EOL, 40% DUTY CYCLE)
    - COLD CASE - (BOL, < 40% DUTY CYCLE)
    - SAFEHOLD MODE (HEATER POWER ONLY)
    - THERMAL - VACUUM SIMULATION
  - MODEL RESULTS USED TO FINE TUNE RADIATORS/HEATERS AND TO PREDICT FLIGHT AND THERMAL-VACUUM PERFORMANCE
- GENERATE SIMPLIFIED MODELS FOR DETERMINING BULK TEMPERATURES, THERMAL BALANCE, INITIAL HEATER/RADIATOR SIZING, ETC.
- NEVADA MODELS MAY BE GENERATED FOR ENVIRONMENTAL LOADS AND RADIATIVE INTERCHANGE DETERMINATION

THERMAL ANALYSIS APPROACH

HUGHES

SANTA BARBARA RESEARCH CENTER
a subsidiary

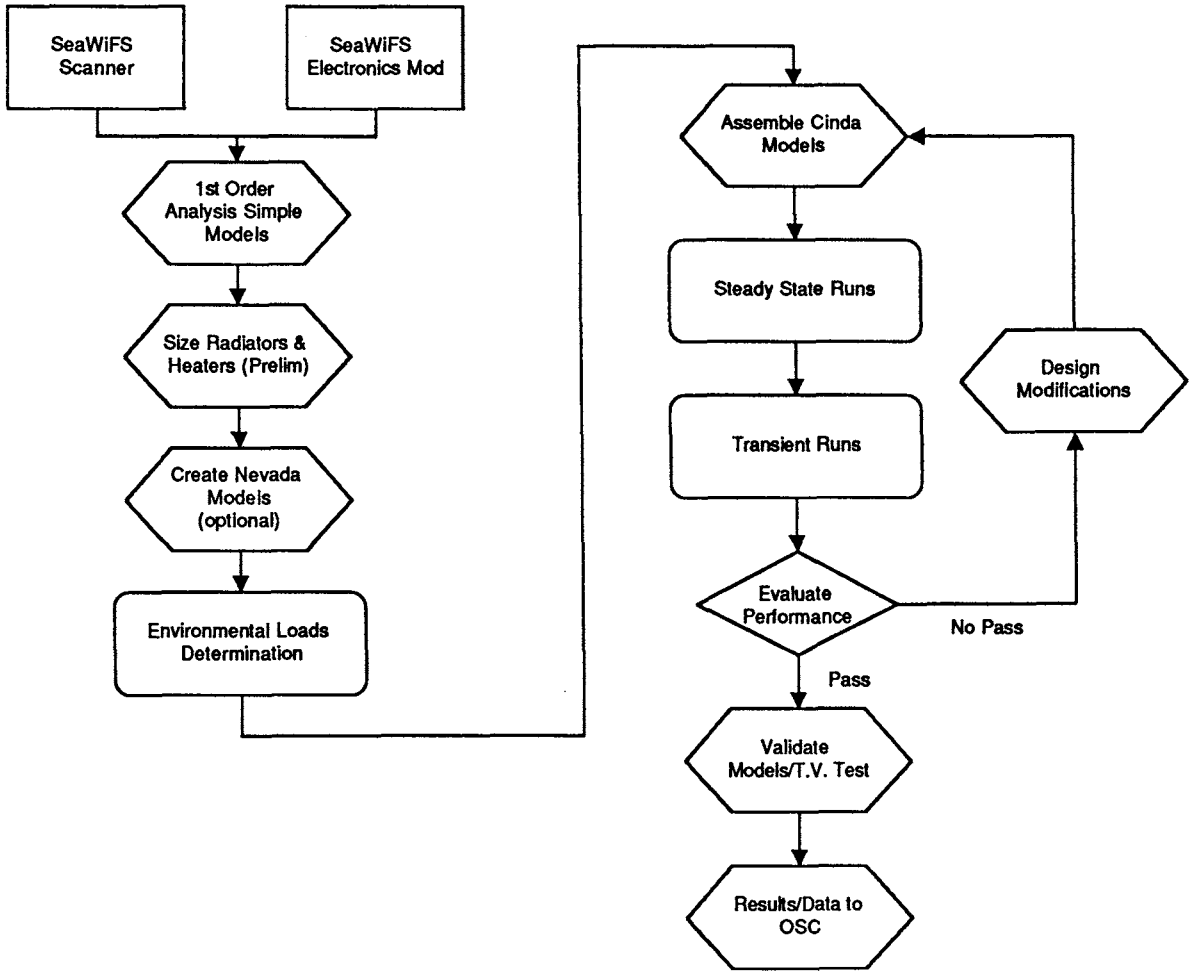

7/91
91-0441-84

ITEMS FOR CONSIDERATION

HUGHES

SANTA BARBARA RESEARCH CENTER
a subsidiary

- DELIVERABLES SCHEDULE
  - PRELIMINARY THERMAL INTERFACE DATA: 8/16/91
  - FINAL THERMAL INTERFACE DATA: 1/16/92
- ITEMS REQUIRING FURTHER DEFINITION: 8/1/91
  - INFORMATION REQUIRED AS DELIVERABLE DATA
  - LAYOUT FOR REGION OF S/C BETWEEN NADIR AND AVIONICS SHELVES
    - INSTRUMENT O&M'S
    - SURFACE PROPERTIES
    - TEMPERATURE RANGES
    - DIMENSIONS
    - TRUSS CONFIGURATION
    - VIEW FACTORS, CFOV, ETC. IF KNOWN

STRUCTURAL AND THERMAL QUALIFICATION

7/91
91-0441-87A

STRUCTURAL AND THERMAL QUALIFICATION PLAN

HUGHES

SANTA BARBARA RESEARCH CENTER
a subsidiary

- ACCEPTANCE TESTING
  - COMPLETED FLIGHT SYSTEMS (SCANNER AND EM)
    - RANDOM VIBRATION AT ACCEPTANCE LEVELS
    - THERMAL VACUUM TEST
    - THERMAL CYCLING TESTS
- QUALIFICATION TESTING
  - SELECTED FLIGHT QUALITY COMPONENTS/SUBASSEMBLIES
    - RANDOM VIBRATION AT PROTOFLIGHT LEVELS
    - THERMAL CYCLING BEYOND NOMINAL RANGE (±5°C MINIMUM)

HUGHES

SANTA BARBARA RESEARCH CENTER
a subsidiary

PRELIMINARY TEST MATRIX

TEST	Components/Subassemblies						Flight System	
	Circuit Cards	Card Guides	Detectors/Preamps	Motors/Bearings	Filters	Electronics Module Housing	Scanner	Electronics Module
Random Vibration	P[1]	P[1]	P[1]	P[2]	-	P[3]	A	A
Acoustic	-	-	-	-	-	-	-	-
Pyroshock	-	-	-	-	-	-	*	*
Q-Stat Accel.	-	-	-	-	-	-	*	*
Thermal Cycling	P	O	P[1]	P	O	P	A	A
Thermal-Vac	-	-	-	-	-	-	A	A

P = Protoflight levels
A = Acceptance levels
O = Other test TBD
* = Accepted by analysis
- = No test required

1 = Sample unit(s) tested (Flight quality)
2 = Qualify one unit at protoflight levels. Acceptance test flight units.
3 = Some components may be replaced with dummy weights

7/91
91-0441-87C

TEST METHODS WILL VERIFY STRUCTURAL AND THERMAL DESIGNS

HUGHES

SANTA BARBARA RESEARCH CENTER
a subsidiary

- VIBRATION TESTING SELECTED COMPONENTS
  - RANDOM VIBRATION TESTING TO PROTOFLIGHT LEVELS
    - 3 ORTHOGONAL AXES, 3 MINUTES PER AXIS
  - WORKMANSHIP AS APPROPRIATE
- THERMAL VACUUM TESTING
  - SIMULTANEOUS TESTING OF FLIGHT SCANNER AND EM
  - CHAMBER WALLS COOLED TO TBD °C
  - SPACE BACKGROUND SIMULATORS ON RADIATORS
  - NO SOLAR OR EARTH SIMULATION

RELIABILITY ENGINEERING

GEORGE GRITT

7/91
91-0441-47

SeaWiFS
RELIABILITY ENGINEERING

HUGHES

SANTA BARBARA RESEARCH CENTER
a subsidiary

- RELIABILITY ORGANIZATION
- RELIABILITY ANALYSES
- PARTS, MATERIALS, AND PROCESSES; SELECTION AND CONTROL
- FAILURE REPORTING
- PROGRAM RELIABILITY

SBRC RELIABILITY DEPARTMENT INDEPENDENT OF PROGRAM OFFICE

HUGHES

SANTA BARBARA RESEARCH CENTER
a subsidiary

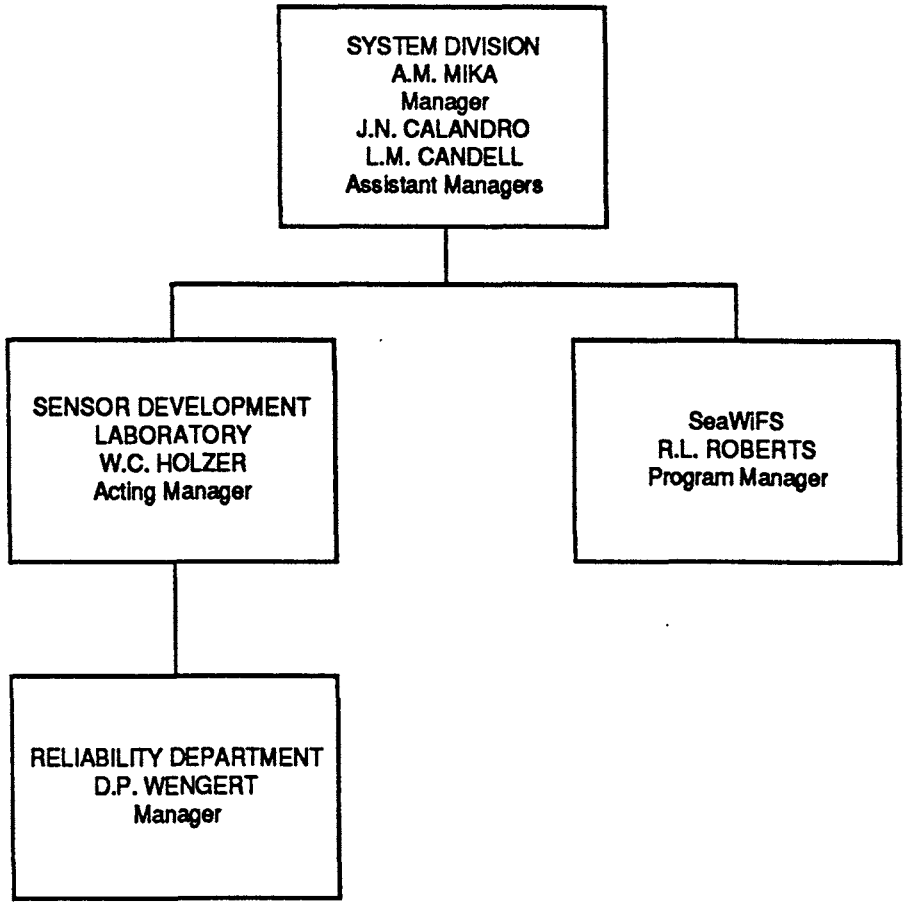

7/91
91-0441-49A

SBRC RELIABILITY DEPARTMENT PROVIDES MANY IMPORTANT SERVICES TO THE SeaWiFS PROGRAM

HUGHES

SANTA BARBARA RESEARCH CENTER
a subsidiary

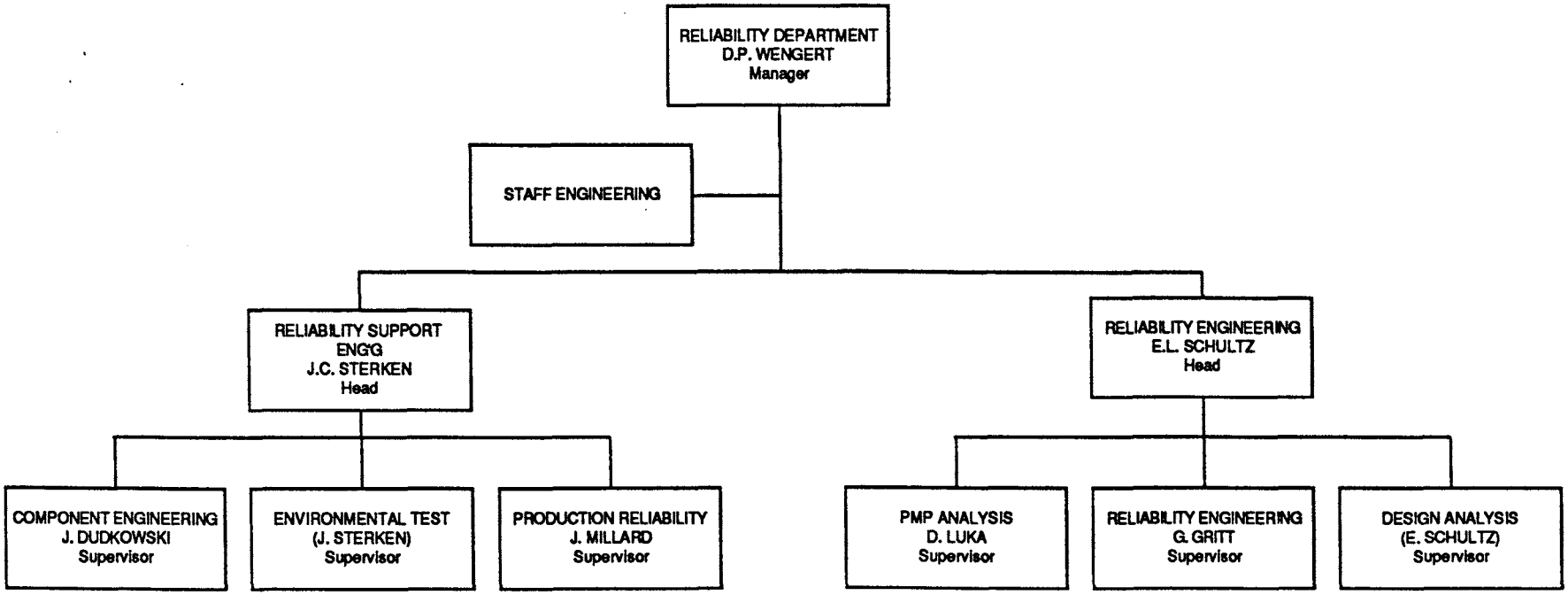

7/91
91-0441-49B

RELIABILITY ANALYSIS TASKS

HUGHES

SANTA BARBARA RESEARCH CENTER
a subsidiary

- STRESS ANALYSIS
- FAILURE MODES, EFFECTS, AND CRITICALITY ANALYSIS (FMECA)
- WORST CASE ANALYSIS
- RADIATION ANALYSIS
- MISCELLANEOUS ANALYSES

RELIABILITY ENGINEERING TO REVIEW ELECTRICAL CIRCUIT DESIGNS FOR APPROPRIATE STRESS DERATING

HUGHES

SANTA BARBARA RESEARCH CENTER
a subsidiary

- NOMINAL ELECTRICAL STRESS ANALYSIS WILL BE PERFORMED BY DESIGN ENGINEERING AND REVIEWED BY RELIABILITY ENGINEERING
- PART STRESS LEVELS WILL BE COMPARED WITH DERATED STRESS VALUES FOR THE PART APPLICATION
- MIL-STD-975 APPENDIX A WILL BE USED AS A DERATING GUIDELINE
- PARTS EXCEEDING DERATED STRESS LEVELS WILL BE REVIEWED FOR SYSTEM AND RELIABILITY IMPACT ALONG WITH APPROPRIATE ACTION

FMECA WILL BE PERFORMED AT SUBASSEMBLY LEVEL TO ENSURE MISSION SUCCESS

HUGHES

SANTA BARBARA RESEARCH CENTER
a subsidiary

- FUNCTIONAL FMECA WILL BE PERFORMED AT THE SUBASSEMBLY LEVEL. EFFECTS WILL BE DESCRIBED AT INSTRUMENT INTERFACE AND MISSION LEVELS.
- INSTRUMENT LEVEL EFFECTS TO BE REVIEWED WITH PROGRAM AND DESIGN ENGINEER PRIOR TO DESIGN RELEASE.
- SUBASSEMBLIES/PARTS WITH SINGLE POINT FAILURE MODES WILL BE REASSESSED FOR RELIABILITY IMPACT AND POSSIBLE RISK MITIGATION.

END OF LIFE DRIFT AND EXTREME VALUE CONDITIONS WILL BE ADDRESSED BY WORST CASE ANALYSIS

HUGHES

SANTA BARBARA RESEARCH CENTER
a subsidiary

- SELECTED CIRCUITS WILL BE ANALYZED ASSUMING WORST CASE TOLERANCE CONDITIONS AT THE COMPONENT LEVEL
- ANALYSIS WILL ADDRESS EXTREME VALUE, END OF LIFE DRIFT, RADIATION AND THERMAL EFFECTS

IONIZING RADIATION – SeaWiFS INSTRUMENT DESIGNED TO EXCEED 5 YEAR TID

HUGHES

SANTA BARBARA RESEARCH CENTER
a subsidiary

- THE DESIGN OF THE INSTRUMENT ENCLOSURE AND PLATFORM PROVIDES SIGNIFICANT RADIATION ATTENUATION
- ANALYSIS WILL BE PERFORMED TO ESTABLISH TOTAL IONIZING DOSE (TID) LEVELS WITHIN THE INSTRUMENT
- A MINIMUM OF 2X RADIATION MARGIN ANTICIPATED
- ADDITIONAL SHIELDING WILL BE PROVIDED FOR SENSITIVE ASSEMBLIES AND COMPONENTS
- ALL COMPONENTS AND MATERIALS USED ON THE SeaWiFS INSTRUMENT WILL HAVE DEMONSTRATED RADIATION LIFETIMES – HANDBOOK/TESTING
- SINGLE EVENT UPSETS WILL BE MINIMIZED THROUGH CIRCUIT DESIGN AND COMPONENT SELECTION

ADDITIONAL SUPPORT BY RELIABILITY ENGINEERING ENSURES SeaWiFS MISSION LIFE

HUGHES

SANTA BARBARA RESEARCH CENTER
a subsidiary

- EVALUATE THE INHERENT RELIABILITY OF ALTERNATE CIRCUIT DESIGNS AND CONFIGURATIONS TO FACILITATE SELECTION OF OPTIMUM DESIGN APPROACH.
- CONDUCT PARTS APPLICATION REVIEWS TO SUPPORT DESIGN ENGINEERING ACTIVITIES AND ASSIST GIDEP ALERT INVESTIGATIONS
- EVALUATE WORST-CASE PARTS OPERATING TEMPERATURES TO ASSIST THERMAL ANALYSIS/DESIGN ACTIVITIES.
- PERFORM OVERSTRESS ANALYSIS, FOR EVENT/FAILURES THAT OCCUR DURING TESTING.

RELIABILITY TO AUDIT PARTS, MATERIAL, AND PROCESSES

HUGHES

SANTA BARBARA RESEARCH CENTER
a subsidiary

- DEVELOP AUTHORIZED PARTS, MATERIALS, AND PROCESSES LISTS
- CONTROLLED BY DRAWING/SPECIFICATION REVIEW
- AUTHORIZED LISTS MAINTAINED BY PMPCB (PARTS, MATERIALS, AND PROCESSES CONTROL BOARD)
- PARTS, MATERIALS, AND PROCESSES FOR PROGRAM USE THAT ARE NOT INCLUDED ON THE AUTHORIZED LISTS ARE SUBMITTED TO PMPCB
- FULL PARTICIPANTS IN GIDEP (GOVERNMENT INDUSTRY DATA EXCHANGE PROGRAM) ALERT SYSTEM

PRELIMINARY PART SELECTION AND CONTROL PROCEDURE FOR EEE COMPONENTS

HUGHES

SANTA BARBARA RESEARCH CENTER
a subsidiary

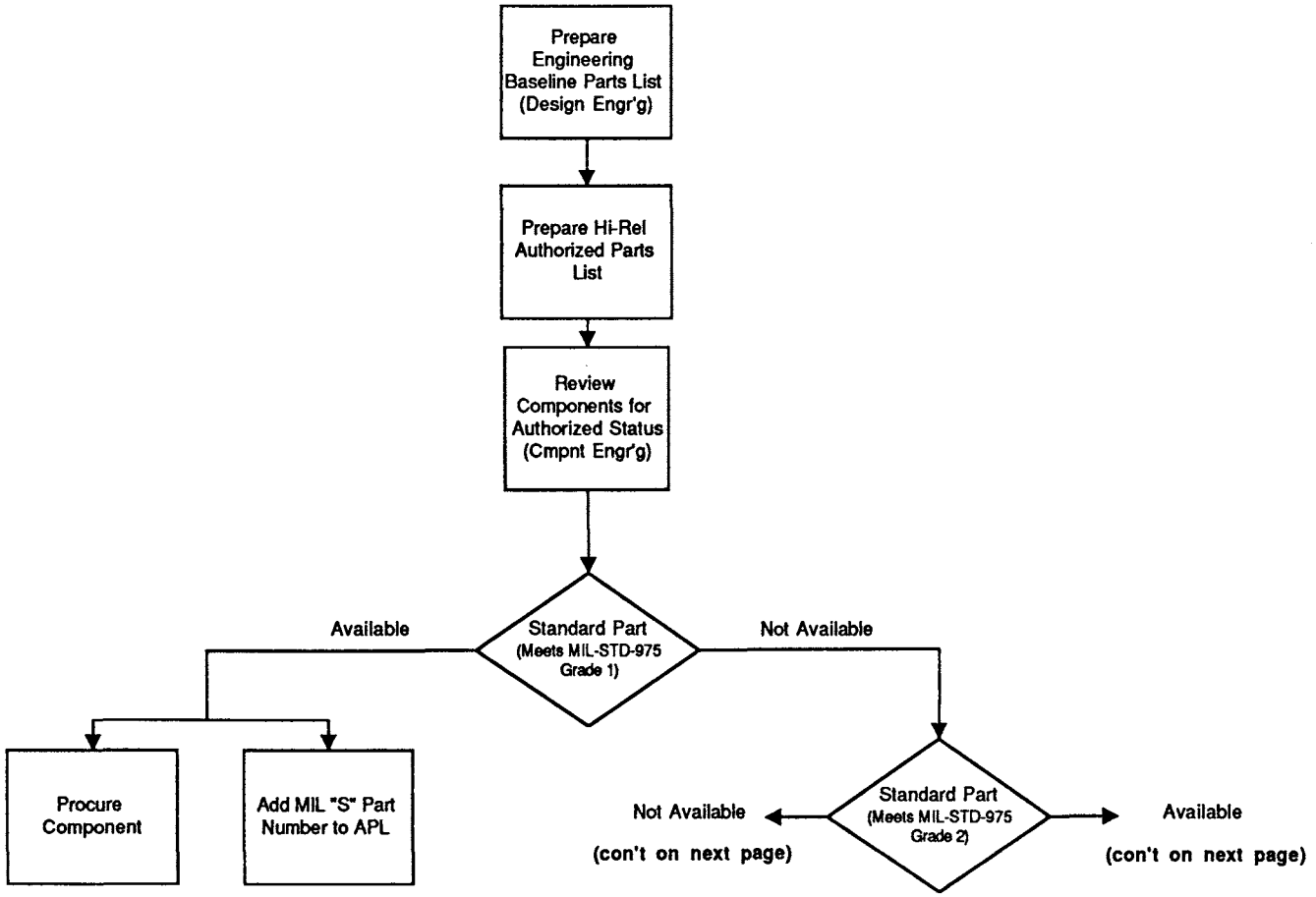

7/91
91-0441-57

PRELIMINARY PART SELECTION AND CONTROL PROCEDURE FOR EEE COMPONENTS (CONT)

HUGHES

SANTA BARBARA RESEARCH CENTER
a subsidiary

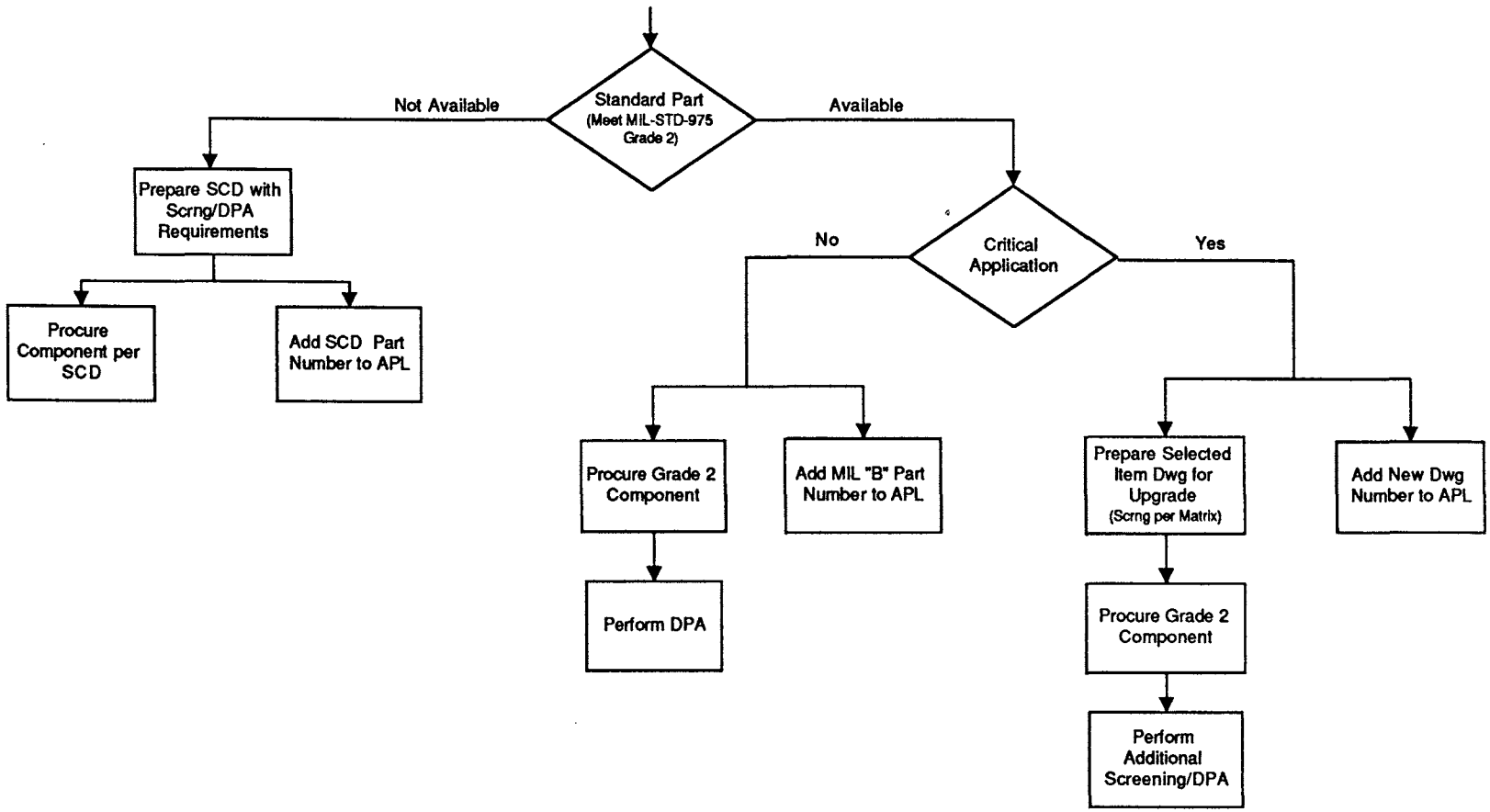

7/91
91-0441-57A

PRELIMINARY SCREENING MATRIX

HUGHES

SANTA BARBARA RESEARCH CENTER
a subsidiary

Sample - High Reliability Parts Screening Matrix

Type of Device	Internal Visual Inspection	High Temperature Storage	Temperature Cycling	Acceleration	Vibration (PIND)	Seal Test	X-Ray	Destructive Physical Analysis (DPA)	Burn-in Typical Test Conditions
Semiconductors									
Diode			X	X	X	X	X	X	240 hrs @ rated power
Transistors			X	X	X	X	X	X	240 hrs @ rated power
Die		X	X					SEM Only	240 hrs @ rated power
Integrated Circuits									
Die		X	X					SEM Only	240 hrs @ rated power
Hybrids	X	X	X	X	X	X	X	X	240 hrs @ rated power

PROGRAM UNIQUE PARTS REQUIRE UNIQUE SCREENING

HUGHES

SANTA BARBARA RESEARCH CENTER
a subsidiary

- PMPCB WILL REVIEW EACH ITEM AND RECOMMEND PROGRAM SPECIFIC TESTING AND CONTROLS
  - MIRROR/COATINGS
  - 2-LAYER AND MULTILAYER BOARDS
  - OPTICAL FILTERS
  - MOTORS/BEARINGS
  - DETECTOR ARRAY
  - FLEX CABLES
  - POWER SUPPLY
  - OTHERS AS APPROPRIATE

PRELIMINARY AUTHORIZATION SEQUENCE FOR MATERIALS AND PROCESSES IDENTIFIED

HUGHES

SANTA BARBARA RESEARCH CENTER
a subsidiary

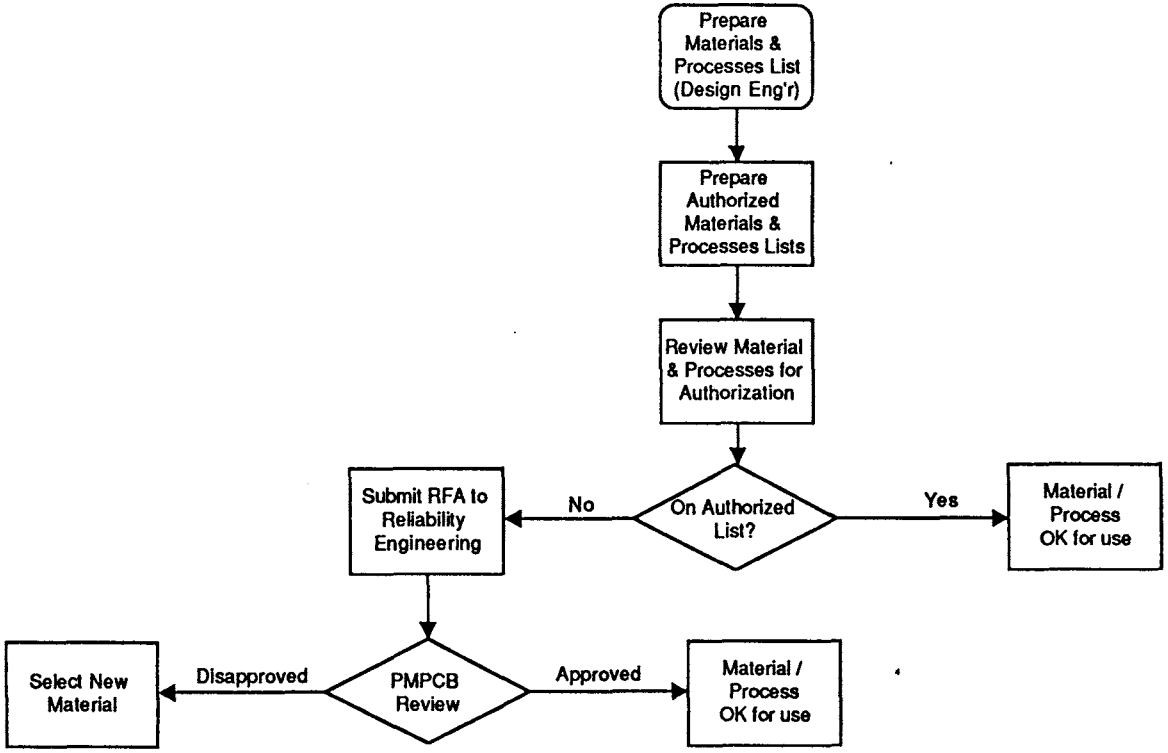

7/91
91-0441-62

RIGOROUS FAILURE REPORTING SYSTEM WILL ASSURE POSITIVE CORRECTIVE ACTION

HUGHES

SANTA BARBARA RESEARCH CENTER
a subsidiary

- EVENT FAILURE REPORTING SYSTEM ESTABLISHED UNDER SIMILAR GROUND RULES AS USED ON PREVIOUS SPACE PROGRAMS, I.E., TM, ETM, ETC.
- DESCRIPTION OF EFR SYSTEM WILL BE DEFINED IN RELIABILITY PROGRAM PLAN, AND SBRC PROGRAM INSTRUCTION.
- FAILURE REVIEW BOARD PARTICIPANTS HAVE BEEN ESTABLISHED
- EFR SYSTEM ESTABLISHED FOR TREND ANALYSIS AND SUMMARY REPORTING

RELIABILITY ENGINEERING: PROGRAMMATICS

HUGHES

SANTA BARBARA RESEARCH CENTER
a subsidiary

- DEVELOP AND RELEASE RELIABILITY PROGRAM PLAN.
- REVIEW DRAWINGS AND SPECIFICATIONS FOR RELIABILITY CONSIDERATIONS AND PROPER APPLICATION OF PARTS, MATERIALS, AND PROCESSES.
- INITIATE APPLICABLE PROGRAM INSTRUCTIONS.
- PROVIDE RELIABILITY ENGINEERING INTERFACE WITH DESIGN, TEST AND PROGRAM ENGINEERS ON FLIGHT HARDWARE PROBLEMS.

BENCH TEST AND CALIBRATION EQUIPMENT

MARK PAUL

7/91
91-0441-269

SUMMARY OF MAJOR REQUIREMENTS

HUGHES

SANTA BARBARA RESEARCH CENTER
a subsidiary

- ACCEPTANCE TEST SET HAS SUFFICIENT CAPABILITY TO ALLOW BOTH BENCH AND THERMO-VACUUM TESTING OF THE SeaWiFS INSTRUMENT
- CUSTOM DE-MUX DECODES PRIMARY AND REDUNDANT IMAGE DATA AND ALLOWS DISPLAY OF ANY TWO OF THE 8 SPECTRAL BANDS USING EXTERNAL SCOPE
- VIDEO IMAGE DATA IS STORED IN RAM (4 MBYTES PER SELECTED INPUT)
- TEST COMPUTER STORES TELEMETRY AND REDUCES DATA FOR DISPLAY ON TEST SYSTEM MONITOR
- CUSTOM DE-MUX ALLOWS DISPLAY OF 64 SCAN LINES OF IMAGE DATA OR 8 CONTINUOUS ROTATIONS
- TEST POINT PANEL AVAILABLE FOR EXTERNAL MONITORING

SeaWiFS INTERFACES (PRELIMINARY)

HUGHES

SANTA BARBARA RESEARCH CENTER
a subsidiary

- 4 GROUPS OF IMAGE DATA, SCAN SYNC, AND CLOCKS, PRIMARY, AND REDUNDANT
- 2 PAIRS OF SERIAL DIGITAL TELEMETRY
- 2 PAIRS OF SERIAL DIGITAL COMMANDS
- 24 LINES OF DIGITAL TELEMETRY
- 18 LINES OF ACTIVE ANALOG TELEMETRY
- 32 LINES OF BINARY COMMANDS
- 6 THERMISTOR LINES
- 10 UNDEFINED EXTERNAL TEMP MONITOR LINES
- 22 UNDEFINED TEST POINTS
- 16 FET RELAY DRIVERS
- 36 ±0.6V, 3.1A POWER SUPPLY
- 30 ±2.0V, 0.77A POWER SUPPLY
- 28 ±4.0V, 1.1A POWER SUPPLY
- 28 ± 4.0V, TBD A POWER SUPPLY

AUTOMATIC TEST SET USES STANDARD VXI INSTRUMENT BUS

HUGHES

SANTA BARBARA RESEARCH CENTER
a subsidiary

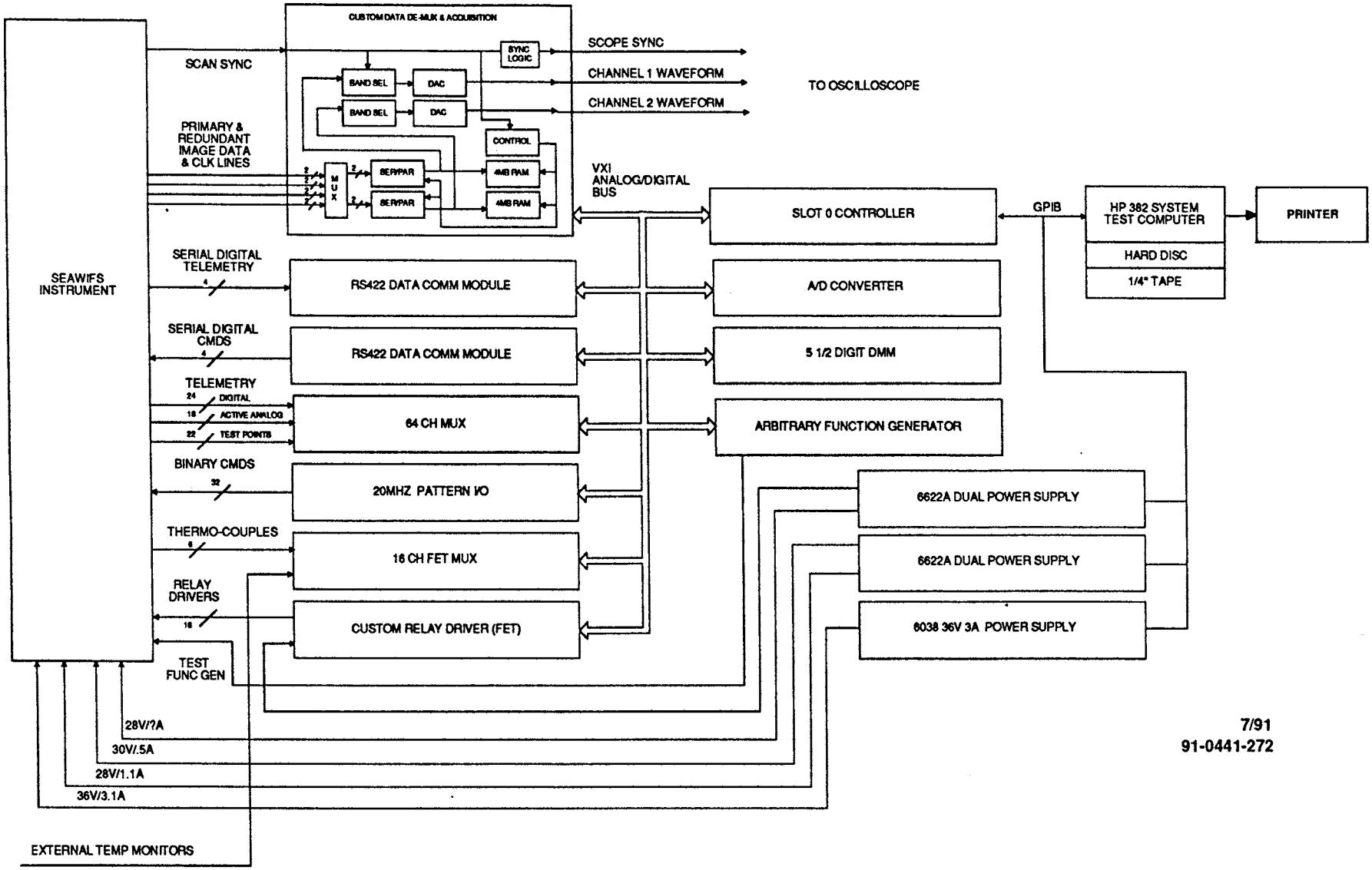

7/91
91-0441-272

USES HP INSTRUMENT CARDS TEST SET

HUGHES

SANTA BARBARA RESEARCH CENTER
a subsidiary

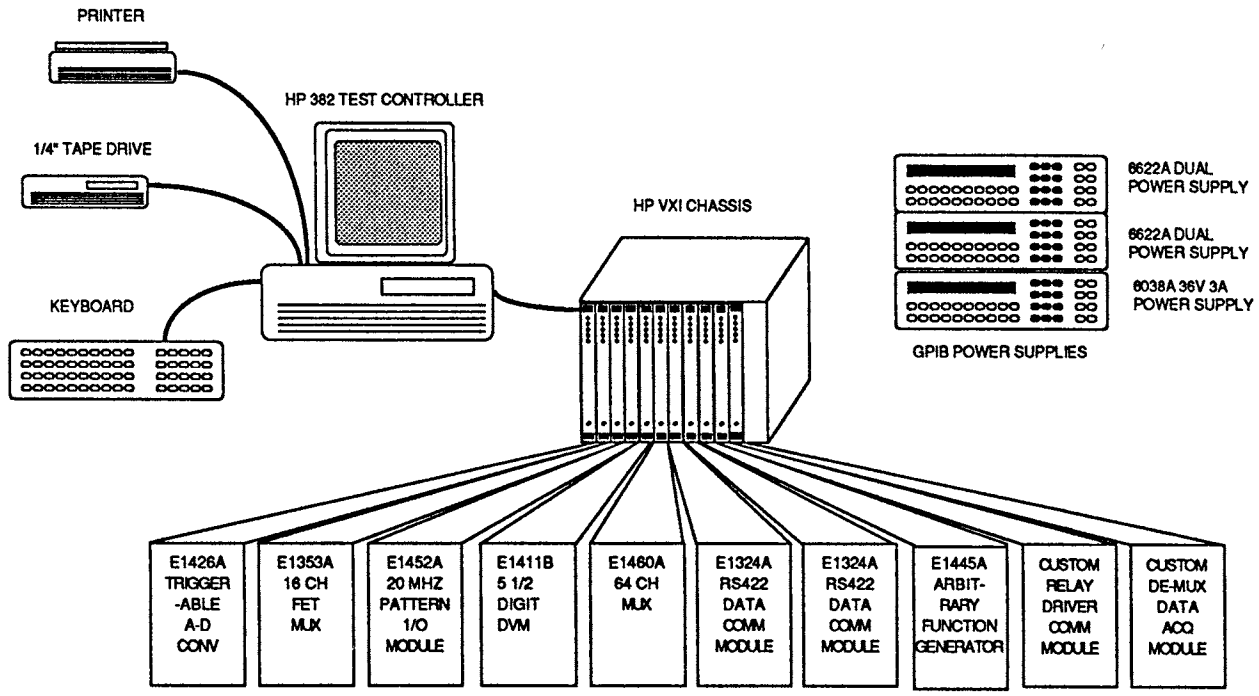

7/91
91-0441-273

TEST SET SOFTWARE IS UNIX BASED USING STANDARD SOFTWARE TOOLS

HUGHES

SANTA BARBARA RESEARCH CENTER
a subsidiary

- HP-UX – UNIX OPERATING SYSTEM
- INTERFACE ARCHITECT – GRAPHICAL USER INTERFACE DESIGN TOOL USED TO GENERATE USER INTERFACE
- VEE-TEST – ENGINEERING TEST GENERATION TOOL USED TO AID IN GENERATING ACCEPTANCE AND SUBTESTS
- APPLICATION CODE WRITTEN IN "C"

DATA ACQUISITION REQUIRES CUSTOM CARD

HUGHES

SANTA BARBARA RESEARCH CENTER
a subsidiary

- THE DE-MUX/DATA ACQUISITION MODULE IS A CUSTOM DESIGNED CARD THAT FITS IN THE VXI CHASSIS AND HAS ACCESS THROUGH AND IS CONTROLLED BY THE VXI INSTRUMENT BUS.
- TWO PRIMARY AND TWO REDUNDANT GROUPS OF IMAGE DATA, CLOCK, AND SYNC LINES ARE INPUTS TO THE DE-MUX.
- 4 TO 1 MULTIPLEXERS ARE USED TO SELECT ANY TWO INPUT GROUPS.
- BAND SELECT LOGIC IS USED TO SELECT ANY OF THE 8 BANDS. EACH OF THE TWO IMAGE DATA STREAMS CAN SELECT ANY BAND.
- TWO DACS CONVERT THE IMAGE DATA AND ARE OUTPUT TO THE SCOPE ALONG WITH THE SYNC LINE.
- THE IMAGE BANDS SELECTED ARE CONTINUOUSLY AVAILABLE AT THE SCOPE OUTPUTS.
- UP TO 4 MBYTES OF IMAGE, AND SYNC DATA ARE STORED IN THE MODULE.
- DATA REDUCTION IS DONE BY THE TEST COMPUTER. THE RESULTS ARE DISPLAYED ON THE TEST SYSTEM MONITOR/PRINTER.

PRELIMINARY CUSTOM DATA ACQUISITION MODULE BLOCK DIAGRAM

HUGHES

SANTA BARBARA RESEARCH CENTER
a subsidiary

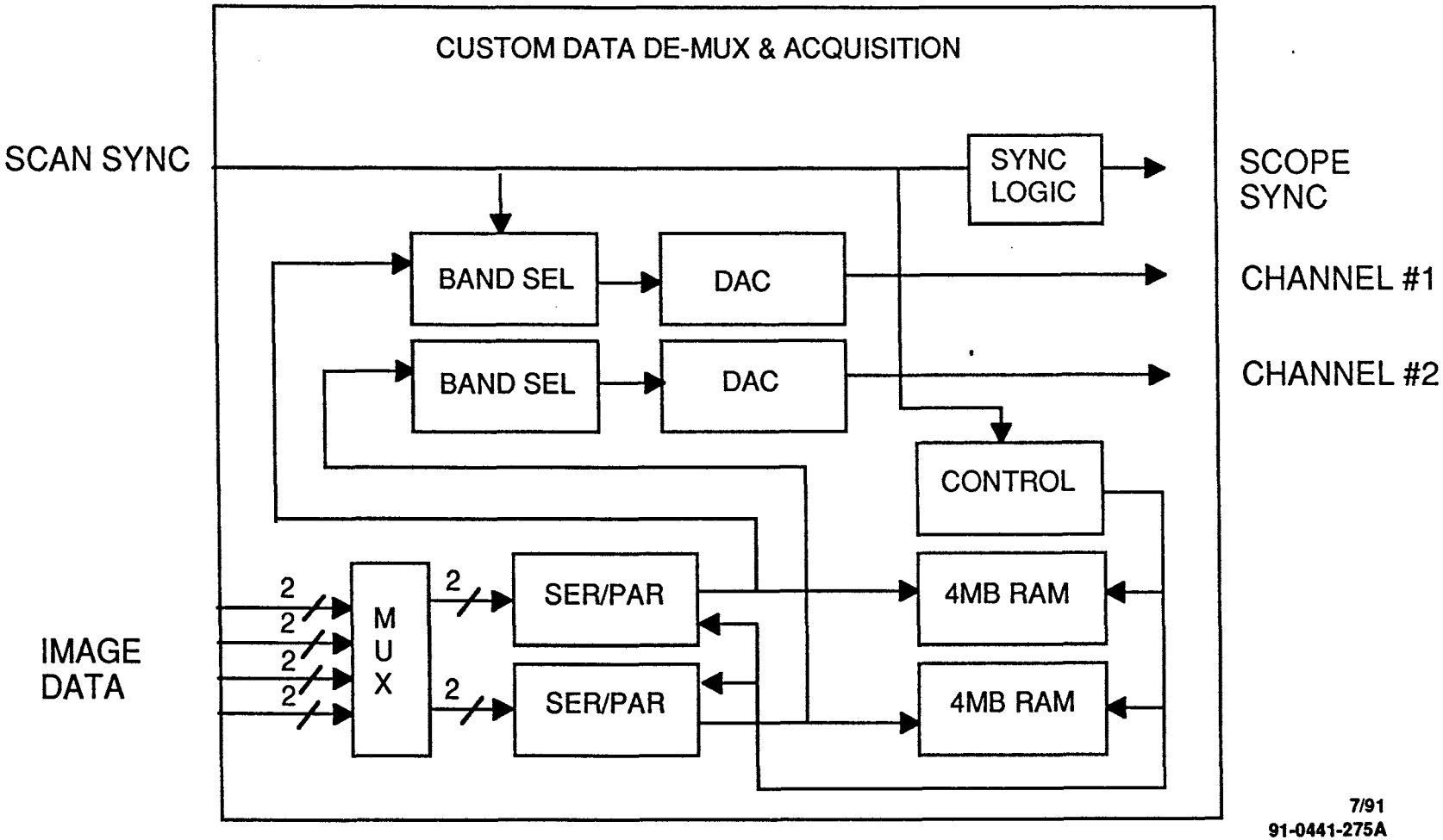

7/91
91-0441-275A

CUSTOM RELAY DRIVE MODULE TO EMULATE SPACECRAFT INTERFACE

HUGHES

SANTA BARBARA RESEARCH CENTER
a subsidiary

- SPECIFICATIONS TBD.

INSTRUMENT TEST SOFTWARE IS USER FRIENDLY

HUGHES

SANTA BARBARA RESEARCH CENTER
a subsidiary

- USER INTERFACE FOR TEST CONTROL AND STATUS
  - INTUITIVE INTERFACE ALLOWS INTERACTION WITH ACCEPTANCE TEST SOFTWARE WITH KEYBOARD AND MOUSE
  - TEST MESSAGE SCREEN PROVIDES USER PROMPTS DURING SEMI-AUTOMATED TEST SEQUENCES, ERROR MESSAGES, TELEMETRY AND TEST POINT DATA.
- DATA PRESENTATION/ARCHIVE
  - DATA ANALYSIS AND GRAPHICAL OUTPUT CAPABILITY ON TEST MESSAGE SCREEN AND HARDCOPY
  - DATA ARCHIVING VIA MASS STORAGE OR VIA ETHERNET TO OTHER SYSTEMS

PRELIMINARY TEST EQUIPMENT VERIFICATION/PHILOSOPHY

HUGHES

SANTA BARBARA RESEARCH CENTER
a subsidiary

- ACCEPTANCE AND SUBTESTS
  - ACCEPTANCE AND SUBTESTS WILL BE VERIFIED USING LABORATORY EQUIPMENT. VERIFICATION TESTS WILL BE CONDUCTED AS BENCH TESTS.
- TEST SOFTWARE/OPERATOR INTERFACE
  - THE USER INTERFACE WILL BE DEMONSTRATED DURING THE VERIFICATION OF THE HARDWARE. THE OPERATING SYSTEM SOFTWARE WILL BE UNDER CONFIGURATION CONTROL CONSISTENT WITH SeaWiFS REQUIREMENTS.
- ENVIRONMENT
  - COMPLIANCE IS BY DISCLOSURE AND LABORATORY DEMONSTRATION.
- HARDWARE CALIBRATION
  - QUALITY TO VERIFY THAT A PROCEDURE IS IN PLACE.
- DRAWINGS
  - COMMERCIAL PRACTICE.
- WORKMANSHIP
  - COMMERCIAL PRACTICE.

SCHEDULE CONSISTENT WITH PROGRAM REQUIREMENTS

HUGHES

SANTA BARBARA RESEARCH CENTER
a subsidiary

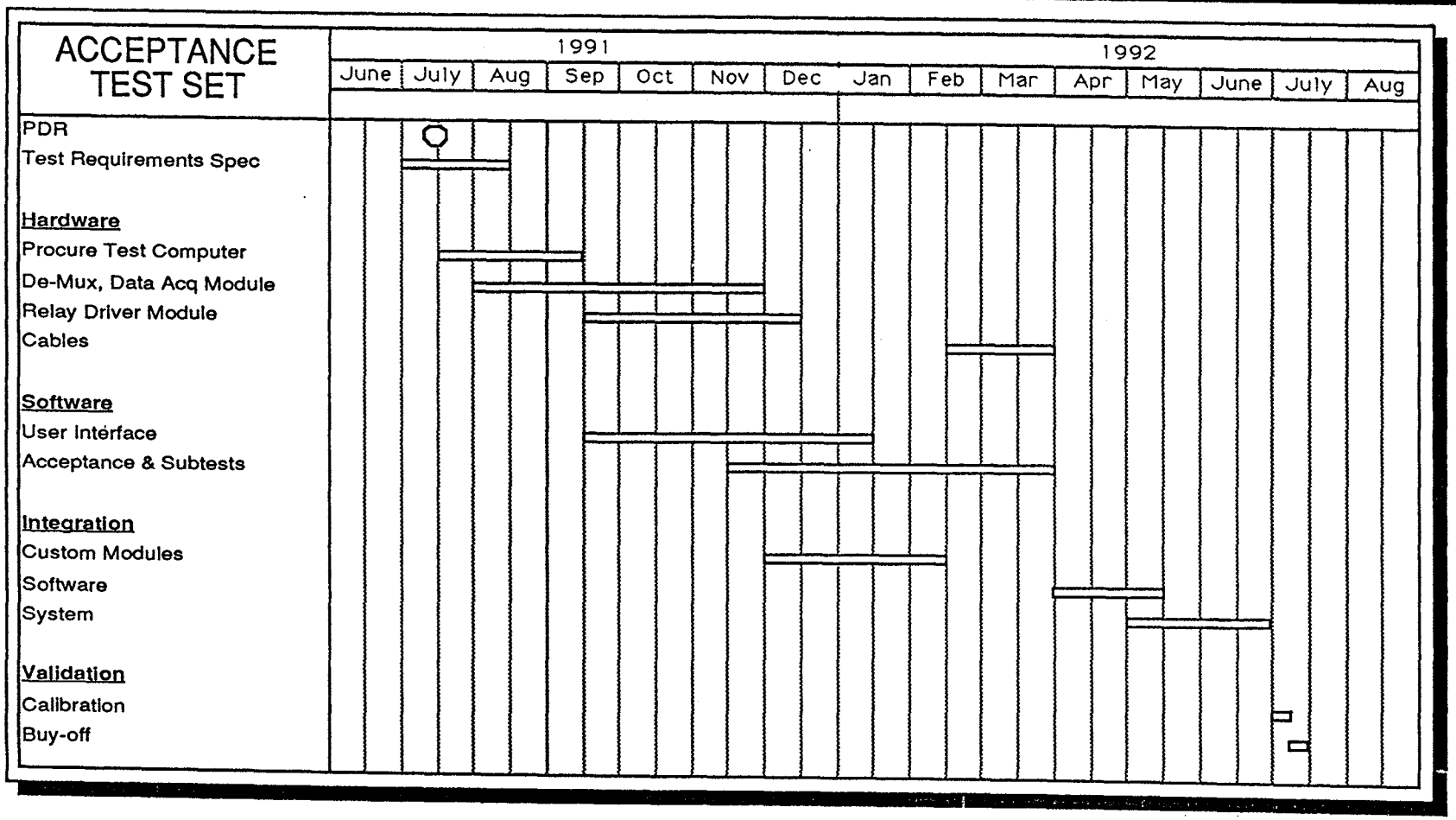

7/91
91-0441-282

SYSTEM INTEGRATION, ALIGNMENT AND TEST

ALAN HOLMES

7/91
91-0441-301

SYSTEM

HUGHES
SANTA BARBARA RESEARCH CENTER
a subsidiary

- INTEGRATION
- ALIGNMENT
- TEST

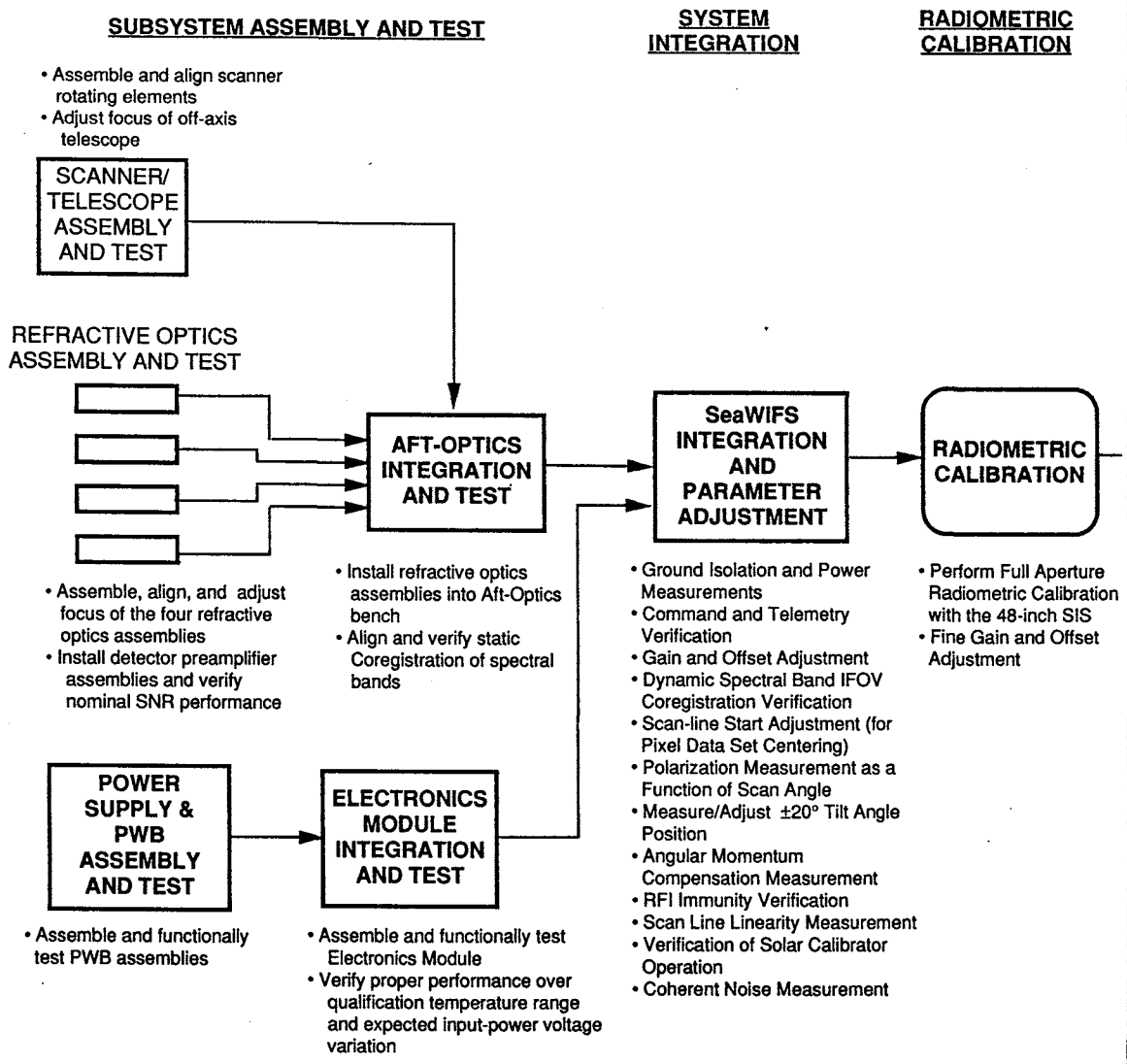

HUGHES

SANTA BARBARA RESEARCH CENTER
a subsidiary

SeaWiFS PRELIMINARY INTEGRATION AND TEST PLAN

7/91
91-0441-301A

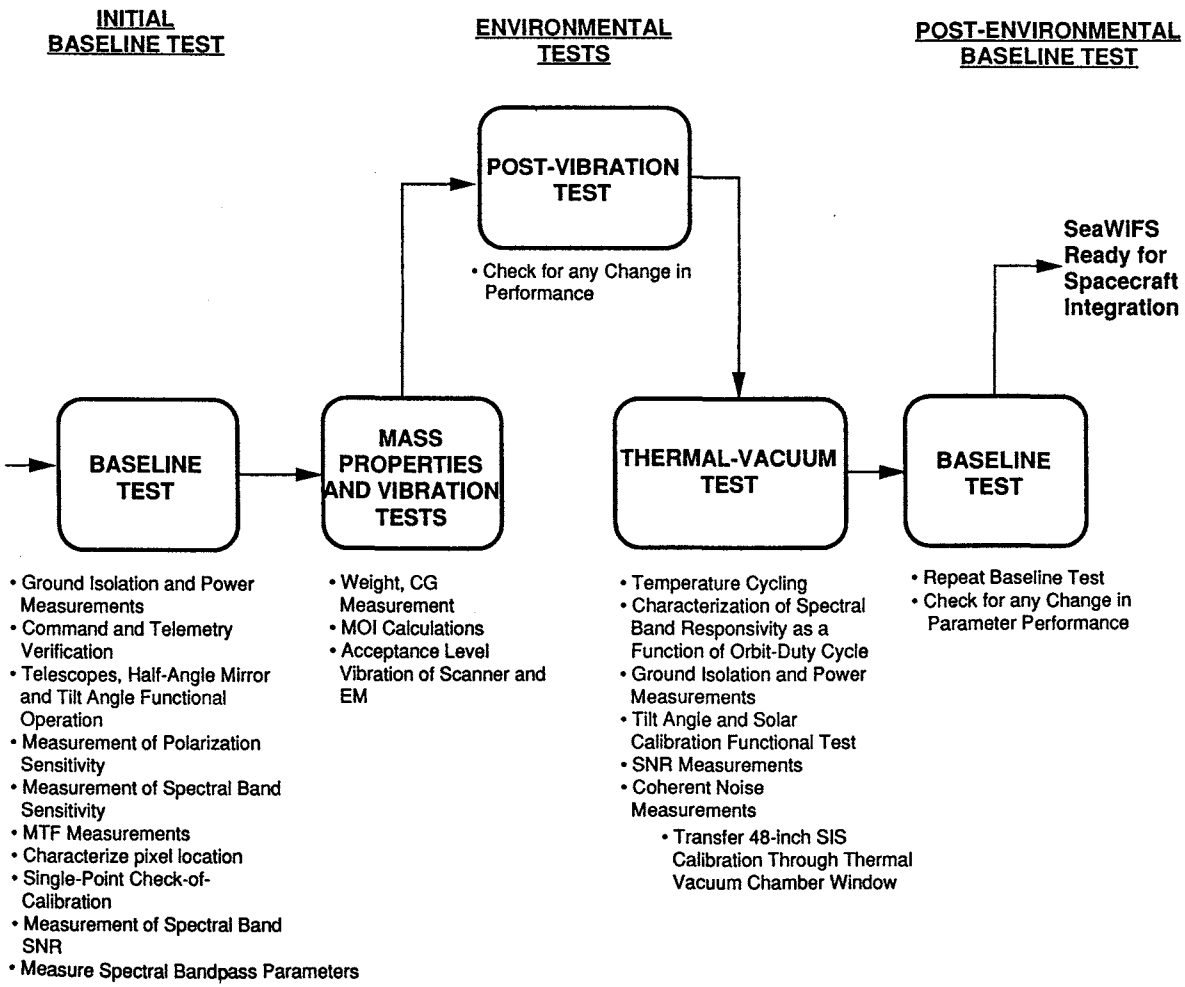

HUGHES

SANTA BARBARA RESEARCH CENTER
a subsidiary

SeaWiFS PRELIMINARY INTEGRATION AND TEST PLAN (CONT)

7/91
91-0441-301B

SYSTEM

HUGHES

SANTA BARBARA RESEARCH CENTER
a subsidiary

- INTEGRATION
- ALIGNMENT
- TEST

7/91
91-0441-301BB

OPTICAL ALIGNMENT CONCEPT SPLITS INSTRUMENT INTO CONVENIENT GROUPS, BUT IS ITERATIVE

HUGHES

SANTA BARBARA RESEARCH CENTER
a subsidiary

OPTICAL ALIGNMENT PROCEDURE

1. ASSEMBLE FOCAL PLANES (INSTALL FILTERS)
2. INTEGRATE FOCAL PLANES WITH LENS PAIR, NOMINAL POLARIZATION COMPENSATOR, AND APPROPRIATE SHIMS INTO TUBE ASSEMBLY
3. CHECK TUBE ASSEMBLY FOR PROPER FOCAL POSITION AND FOCAL LENGTH USING FIXTURE A. ADJUST WITH LENS SHIM AND REAR SPACER
4. INTEGRATE DICHROICS, FOLDING FLAT, COLLIMATOR, AND TUBE ASSEMBLY ONTO OPTICAL BENCH
5. ADJUST FOCUS BY MOVING COLLIMATOR. ADJUST REGISTRATION AND POSITION BY TRANSLATING FOCAL PLANES, USING FIXTURE B
6. ASSEMBLE TELESCOPE AND HALF-ANGLE MIRROR STRUCTURE. AT NOMINAL NADIR POINT ADJUST TELESCOPE PRIMARY FOR PROPER FOCUS. ADJUST ROTATING FOLDING FLAT FOR OPTIMUM POSITION. CHECK BOTH SIDES OF HALF-ANGLE MIRROR. PROCEDURE USES FIXTURE C
7. INTEGRATE TELESCOPE AND OPTICAL BENCH. TEST FOCUS AND REGISTRATION. FINE TUNE WITH ROTATING FOLDING FLAT ADJUSTMENT. MEASURE POLARIZATION, DISASSEMBLE OPTICAL BENCH AND INSTALL OPTIMUM POLARIZATION COMPENSATORS. REASSEMBLE SCANNER AGAIN

OPTICAL ALIGNMENT CONCEPT MINIMIZES ADJUSTABLE COMPONENTS

HUGHES

SANTA BARBARA RESEARCH CENTER
a subsidiary

ADJUSTMENTS	TRANS-LATION	FOCUS	TILT	REPLACE-MENT	ADJUSTMENT NOT REQUIRED
OPTICAL COMPONENT					
TELESCOPE PRIMARY		✓	✓		
FOLDING FLAT		✓	✓		
HALF-ANGLE MIRROR			✓		
COLLIMATOR		✓	✓		
45° FOLD MIRROR					✓
DICHROICS					✓
POLARIZATION COMPENSATORS				✓	
LENS 1					✓
LENS 2		✓			
FOCAL PLANE	✓	✓			

✓ SIGNIFIES ADJUSTMENT CAPABILITY REQUIRED

7/91
91-0441-27AB

IDENTIFICATION OF OPTICAL ELEMENTS

HUGHES

SANTA BARBARA RESEARCH CENTER
a subsidiary

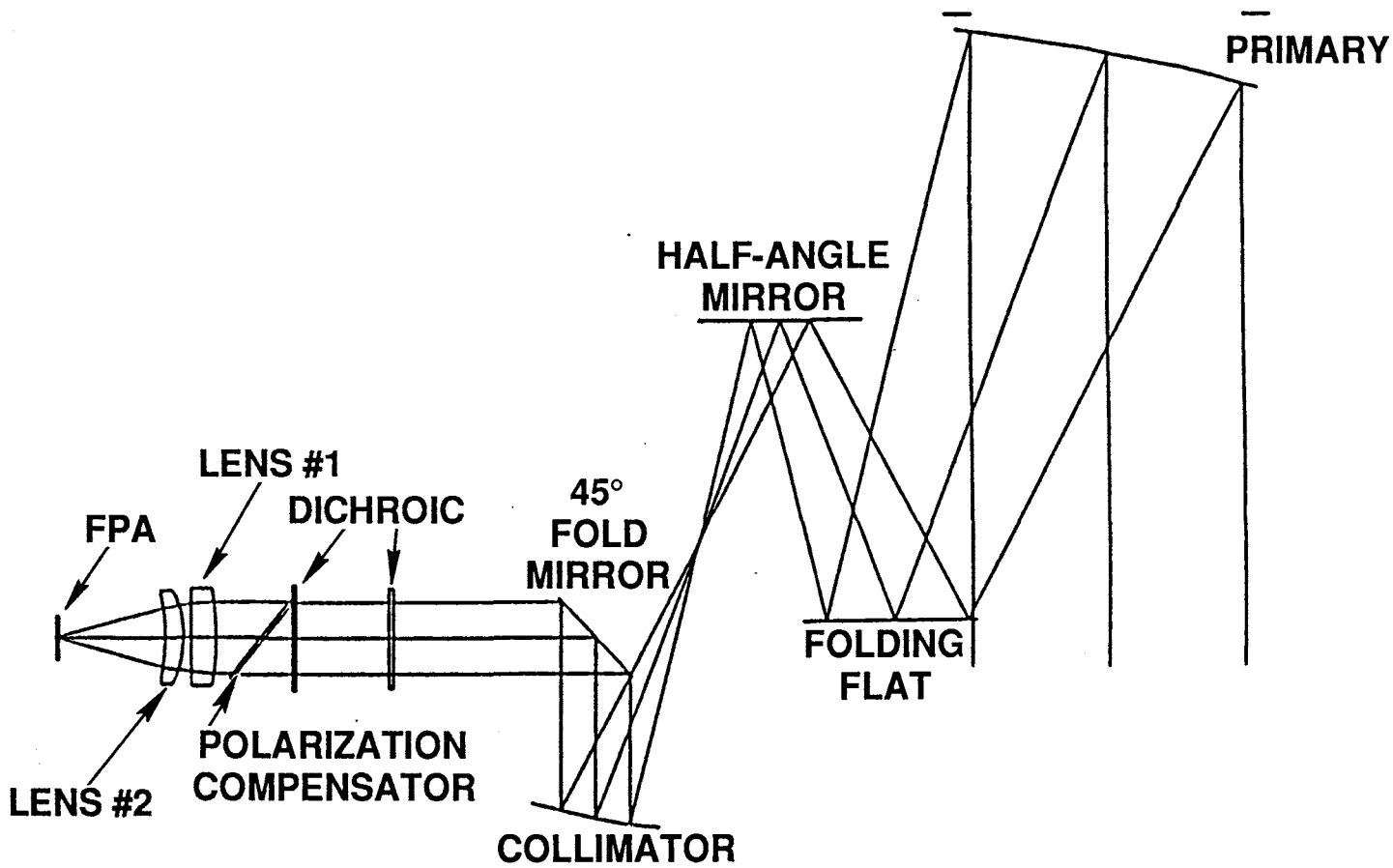

7/91
91-0441-27ABC

POSITIONAL ALIGNMENT PROCEDURE SETS SCANNER TO NOMINAL POSITION RELATIVE TO BASEPLATE

HUGHES

SANTA BARBARA RESEARCH CENTER
a subsidiary

	STEP	RMS ACCURACY OF SETTING (MR)
1)	ALIGN ALL FOCAL PLANES TO REGISTER DETECTORS (BAND 7 IS FIDUCIAL POINT)	0.16
2)	ADJUST TELESCOPE OPTICS TO SET OPTICAL AXIS PERPENDICULAR TO SPIN AXIS (USING ALIGNMENT MIRRORS ON MOTOR SHAFTS)	1.0
3)	ADJUST TILT MECHANISM TO SET SCAN PLANE PERPENDICULAR TO BASEPLATE. SET ±20 DEGREE STOPS ALSO	1.0
4)	SET TILT MECHANISM TO ZERO POSITION. ADJUST ALIGNMENT PIN ON BASEPLATE TO ACCURATELY INDICATE SCAN PLANE	1.0

SYSTEM

HUGHES

SANTA BARBARA RESEARCH CENTER
a subsidiary

- INTEGRATION
- ALIGNMENT
- TEST

ACCEPTANCE TESTS VERIFY AND CALIBRATE INSTRUMENT PERFORMANCE

HUGHES

SANTA BARBARA RESEARCH CENTER
a subsidiary

- VERIFICATION OF PERFORMANCE
  - POWER USAGE
  - POWER SUPPLY HEALTH
  - PROPER COMMAND/TELEMETRY OPERATION
  - MOTOR TORQUE MARGIN
  - REDUNDANCY AND CROSS-STRAPPING OPERATION
  - TELESCOPE STOW OPERATION
  - ANGULAR MOMENTUM COMPENSATION
- RADIOMETRIC CALIBRATION
  - CALIBRATION WITH SPHERE
  - RELATIVE SPECTRAL RESPONSE
  - SOLAR CALIBRATOR CHARACTERIZATION
  - LINEARITY AND GAIN RATIOS

ACCEPTANCE TESTS (CONT)

HUGHES
SANTA BARBARA RESEARCH CENTER
a subsidiary

- <u>POSITIONAL CALIBRATION</u>
  - BAND-TO-BAND REGISTRATION
  - SCAN LINEARITY
  - SCANNER TILT ANGLE MEASUREMENT
  - SCAN PLANARITY
  - NADIR POINT RELATIVE TO CUBE
- <u>CHARACTERIZATION OF INSTRUMENTAL EFFECTS</u>
  - MTF AND IFOV
  - POLARIZATION SENSITIVITY WITH SCAN ANGLE
  - SCAN MODULATION
  - BRIGHT TARGET RECOVERY
  - COHERENT NOISE
  - STRAY LIGHT

SENSITIVITY EQUATION AND POLARIZATION COORDINATE SYSTEM

HUGHES

SANTA BARBARA RESEARCH CENTER
a subsidiary

SENSITIVITY EQUATION

$$L = \frac{S \cdot BITS}{1000},$$

WHERE L = INPUT RADIANCE IN $MW/CM^2/STER/\mu m$
S = $\mu W/CM^2/STER/\mu m/BIT$

SINCE SENSITIVITY IS SLIGHTLY POLARIZATION SENSITIVE:

$$S = \frac{Sz + Sy}{2} = \text{AVERAGE SENSITIVITY}$$

$$P = \frac{Sz - Sy}{Sz + Sy} = \text{DEGREE OF POLARIZATION VARIATION OF SENSITIVITY}$$

WHERE Sz = SENSITIVITY TO LIGHT WITH E-VECTOR PARALLEL TO THE Z-AXIS
Sy = SENSITIVITY TO LIGHT WITH E-VECTOR PARALLEL TO THE Y-AXIS

Sz and Sy CAN BE FOUND FROM:

$$Sz = S\,(1+P)$$

$$Sy = S\,(1 - P)$$

RADIOMETRIC CALIBRATION EQUATION

HUGHES

SANTA BARBARA RESEARCH CENTER
a subsidiary

CALIBRATION EQUATION

$$S_b(\lambda) = \frac{10^{-6}}{A \cdot \Omega \cdot T_b(\lambda) \cdot R_b(\lambda) \cdot G_b} \; \frac{\mu W}{CM^2 \cdot STER \cdot BIT}$$

WHERE
- A = APERTURE AREA IN CM^2
- Ω = IFOV IN STER
- $T_b(\lambda)$ = OPTICAL TRANSMISSION FOR BAND b AT WAVELENGTH λ
- $R_b(\lambda)$ = DETECTOR RESPONSIVITY AT WAVELENGTH λ IN AMPS/WATT
- G_b = ELECTRONIC GAIN FOR BAND b IN BITS/pA

RADIOMETRIC CALIBRATION EQUATION (CONT)

HUGHES

SANTA BARBARA RESEARCH CENTER
a subsidiary

INTEGRATED CALIBRATION EQUATION

$$S_b = \frac{S_b(\lambda peak)}{\int \frac{T_b(\lambda) \cdot R_b(\lambda) \cdot d\lambda}{[T_b(\lambda) \cdot R_b(\lambda)]_{peak}}} \quad \frac{\mu W}{CM^2 \cdot STER \cdot \mu m \cdot BIT}$$

WHERE $\lambda peak$ = WAVELENGTH WHERE s_b IS MAXIMUM

$[T_b(\lambda) \cdot R_b(\lambda)]_{peak}$ = MAXIMUM VALUE OF PRODUCT

RADIOMETRIC CALIBRATION EQUATION: ADJUSTMENTS OVER FOV

HUGHES

SANTA BARBARA RESEARCH CENTER
a subsidiary

- $S_{bz}(\alpha) = S_b[1 + P(\alpha)] \times MOD(\alpha)$
- $S_{by}(\alpha) = S_b[1 - P(\alpha)] \times MOD(\alpha)$
  - WHERE:
    - $S_{bz}(\alpha)$ = INTEGRATED SENSITIVITY AT SCAN ANGLE α AND FOR POLARIZATION z
    - $P(\alpha)$ = DEGREE OF POLARIZATION AT ANGLE α
    - $MOD(\alpha)$ = $S_b(\alpha)/S_b(NADIR)$

MEASUREMENT PROCEDURE TO DETERMINE PARAMETERS IN RADIOMETRIC CALIBRATION EQUATION

HUGHES

SANTA BARBARA RESEARCH CENTER
a subsidiary

PARAMETER	CALIBRATION STEP
1) A (AREA OF APERTURE)	MECHANICAL MEASUREMENT
2) Ω (PIXEL IFOV)	IFOV SCAN
3) $\frac{T_b(\lambda) \times R_b(\lambda)}{[T_b(\lambda) \times R_b(\lambda)]_{peak}}$ (RELATIVE TRANSMISSION AND RESPONSIVITY)	RELATIVE SPECTRAL RESPONSE
4) G_b (ELECTRONIC GAIN)	LINEARITY AND GAIN RATIOS
5) $\int \frac{T_b(\lambda) \times R_b(\lambda) \times d\lambda}{[T_b(\lambda) \times R_b(\lambda)]_{peak}}$ (BANDPASS)	CALCULATION FROM 3
6) S_b (INTEGRATED SENSITIVITY)	INTEGRATING SPHERE
7) $T_b(\lambda) \times R_b(\lambda)$ (ABSOLUTE TRANSMISSION AND RESPONSIVITY)	CALCULATION FROM 3 AND 6
8) $S_b(\lambda)$ (SENSITIVITY)	CALCULATION FROM 1, 2, 4, AND 7
9) $P(\alpha)$ (POLARIZATION)	POLARIZATION OVER ANGLE
10) $MOD(\alpha)$ (SCAN MODULATION)	SCAN MODULATION OVER ANGLE

48-INCH INTEGRATING SPHERE

HUGHES

SANTA BARBARA RESEARCH CENTER
a subsidiary

7/91
91-0441-279

LABORATORY APPARATUS DEVELOPED FOR POLARIZATION MEASUREMENT

HUGHES

SANTA BARBARA RESEARCH CENTER
a subsidiary

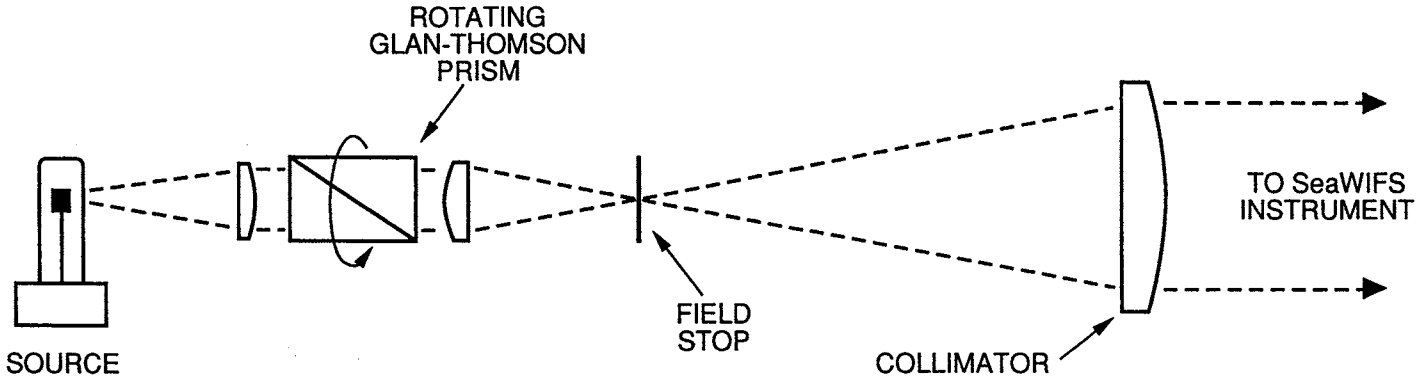

7/91
91-0441-124

DEFINITION OF INSTRUMENT ROTATIONAL AXES

HUGHES

SANTA BARBARA RESEARCH CENTER
a subsidiary

- ANGLES MEASURED IN CALIBRATION PROCESS

  α = ANGLE BETWEEN THE X-Y PLANE AND THE PIXEL IFOV CENTROID MEASURED IN THE SCAN PLANE WITH THE +Z AXIS BEING +90°

  β = ANGLE BETWEEN THE +X AXIS AND THE PIXEL IFOV CENTROID PROJECTED ONTO THE X-Y PLANE, WITH THE +Y AXIS BEING +90°

- ANGLES USED TO DEFINE INSTRUMENT IFOV POSITION

  AZIMUTH = Az = ANGLE BETWEEN THE +X AXIS AND THE PIXEL IFOV CENTROID PROJECTED ONTO THE X-Z PLANE, WITH THE +Z AXIS BEING 90°

  ELEVATION = El = ANGLE BETWEEN THE X-Z PLANE AND THE PIXEL IFOV CENTROID, WITH THE +Y AXIS BEING +90°

- RELATIONSHIP BETWEEN MEASURED AND DEFINED ANGLES

$$Az = \arctan\left[\frac{\tan(\alpha)}{\cos(\beta)}\right] \qquad El = \arcsin[\cos(\alpha) \times \sin(\beta)]$$

7/91
91-0441-30F

DIAGRAM SHOWING INSTRUMENT ROTATIONAL AXES

HUGHES

SANTA BARBARA RESEARCH CENTER
a subsidiary

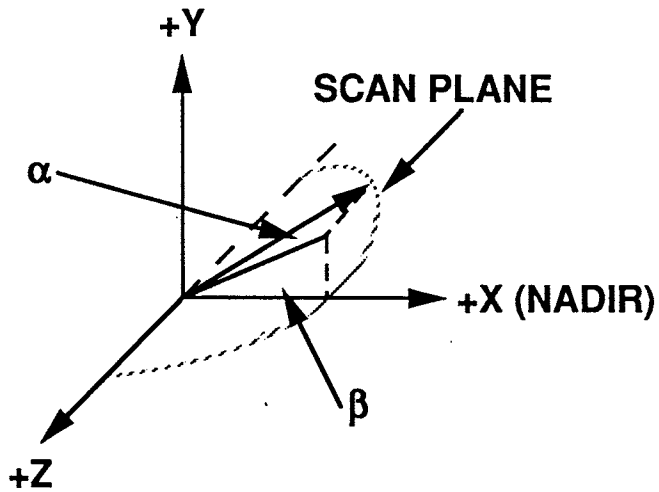

α ILLUSTRATED IS NEGATIVE,
β IS POSITIVE

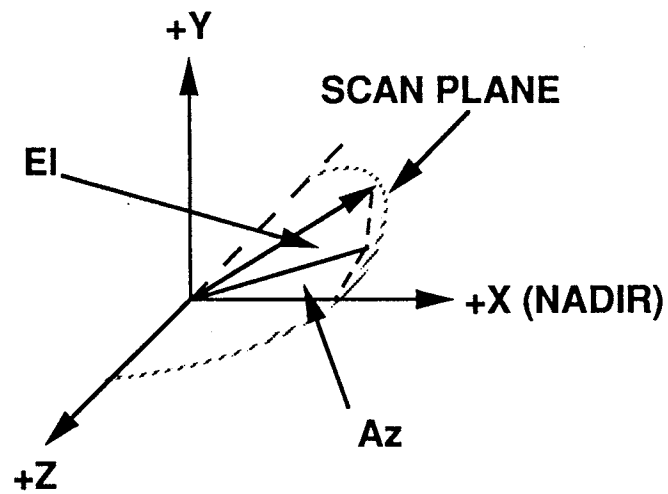

Az ILLUSTRATED IS NEGATIVE,
El IS POSITIVE

7/91
91-0441-30FAA

POINTING COORDINATE MEASUREMENT TECHNIQUE MEASURES COORDINATES AT ALL POSITIONS

HUGHES

SANTA BARBARA RESEARCH CENTER
a subsidiary

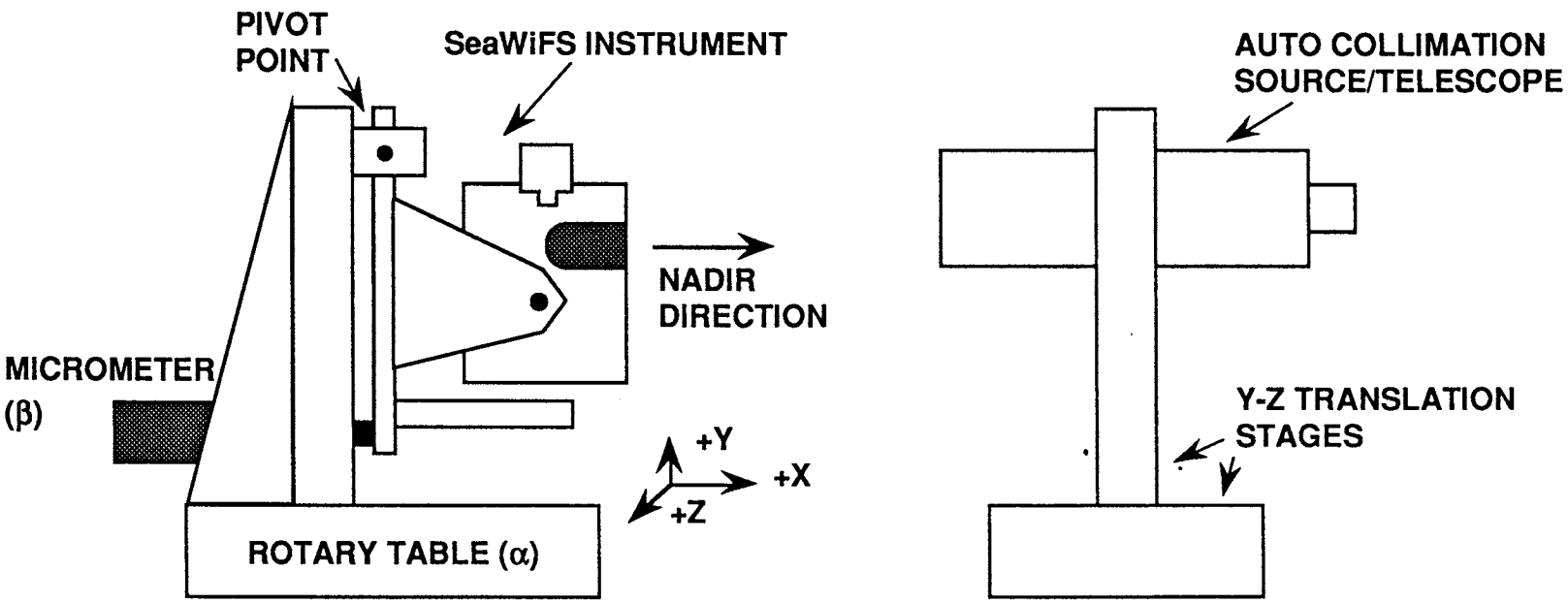

- ACTUAL FIXTURE WILL USE SHIMS OR WEDGES IN CONJUNCTION WITH MICROMETER TO TILT INSTRUMENT ±20°. TOP PIVOT WILL BE MECHANICALLY PRECISE. SCAN PLANE WILL BE POSITIONED

7/91
91-0441-30FC

CALIBRATION EQUATION FOR POINTING COORDINATE α

HUGHES

SANTA BARBARA RESEARCH CENTER
a subsidiary

$$\alpha(b, x, t) = \alpha(7, 636.5, t) + \varepsilon_\alpha(7, b) + 635.5 \times POF \times C_\alpha + POF^3 \times K^3{}_{\alpha 3}$$

WHERE: $\alpha(b, x, t)$ = PIXEL IFOV CENTROID FOR BAND b, PIXEL x, AND TILT POSITION t

$\varepsilon_\alpha(7, b)$ = ANGULAR MISALIGNMENT BETWEEN BAND 7 AND BAND b IN ALONG-SCAN DIRECTION

$POF = \dfrac{x - 636.5}{635.5}$ (x IS PIXEL NUMBER. QUANTITY IS PIXEL OFFSET FROM CENTER)

$C_\alpha, K_{\alpha 3}$ = CALIBRATION CONSTANTS

7/91
91-0441-30FA

CALIBRATION EQUATION FOR POINTING COORDINATE β

HUGHES

SANTA BARBARA RESEARCH CENTER
a subsidiary

$$\beta(b, x, t) = \beta(7, 636.5, t) + \varepsilon_\beta(7, b) + (t - tc) \times C_\beta + POF \times K_{\beta 1} + POF^2 \times K^2_{\beta 2} + POF^3 \times K^3_{\beta 3}$$

WHERE: $\beta(b, x, t)$ = PIXEL IFOV CENTROID FOR BAND b, PIXEL x, AND TILT POSITION t

$\varepsilon_\beta(7, b)$ = ANGULAR MISALIGNMENT BETWEEN BAND 7 AND BAND b IN THE TRACK DIRECTION

tc = TILT POSITION ENCODER READING AT CENTER POSITION

$$POF = \frac{x - 636.5}{635.5} \quad \text{(x IS PIXEL NUMBER)}$$

$C_\beta, K_{\beta 1}, K_{\beta 2}, K_{\beta 3}$ = CALIBRATION CONSTANTS

7/91
91-0441-30FB

MEASUREMENT PROCEDURE TO DETERMINE PARAMETERS IN PIXEL COORDINATE POSITION EQUATION

HUGHES

SANTA BARBARA RESEARCH CENTER
a subsidiary

	PARAMETER	CALIBRATION STEP
1)	$\varepsilon_\alpha(7, b)$ (BAND-TO-BAND ERRORS)	BAND-TO-BAND REGISTRATION
2)	$\varepsilon_\beta(7, b)$	BAND-TO-BAND REGISTRATION
3)	$\alpha(7, 636.5, tc)$ (NADIR POINTING ANGLE)	NADIR POINT RELATIVE TO CUBE
4)	$\beta(7, 636.5, tc)$	NADIR POINT RELATIVE TO CUBE
5)	C_α, $K_{\alpha 3}$ (SCAN CONSTANTS)	SCAN LINEARITY
6)	C_β	SCANNER TILT ANGLE MEASUREMENT
7)	$K_{\beta 1}$, $K_{\beta 2}$, $K_{\beta 3}$	SCAN PLANARITY
8)	Az, E1	CALCULATION FROM α AND β

ALIGNMENT OF SeaWiFS TELESCOPE TO ALIGNMENT CUBES IS FACILITATED BY AUTOCOLLIMATION SOURCE/TELESCOPE

HUGHES

SANTA BARBARA RESEARCH CENTER
a subsidiary

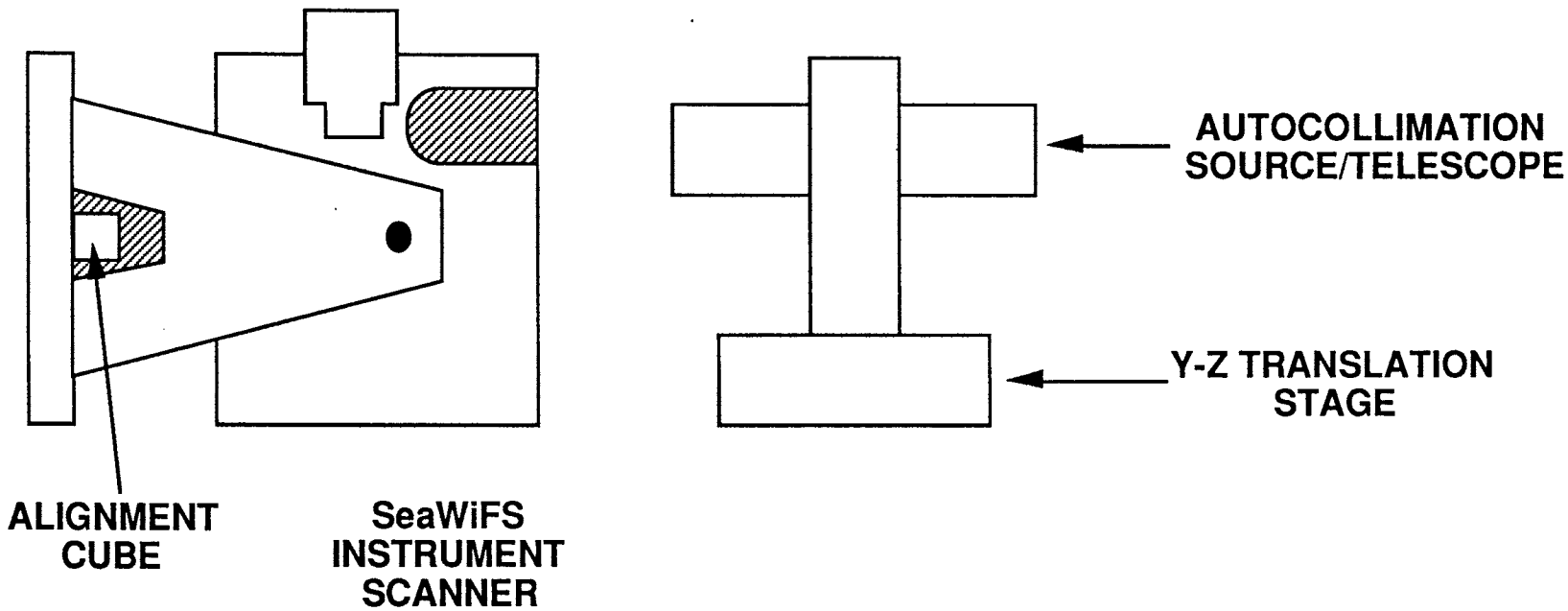

7/91
91-0441-29AB

AUTOCOLLIMATION SOURCE/TELESCOPE ALLOWS SeaWiFS TO DETECT CROSSHAIRS THAT ARE ALSO USED VISUALLY

HUGHES

SANTA BARBARA RESEARCH CENTER
a subsidiary

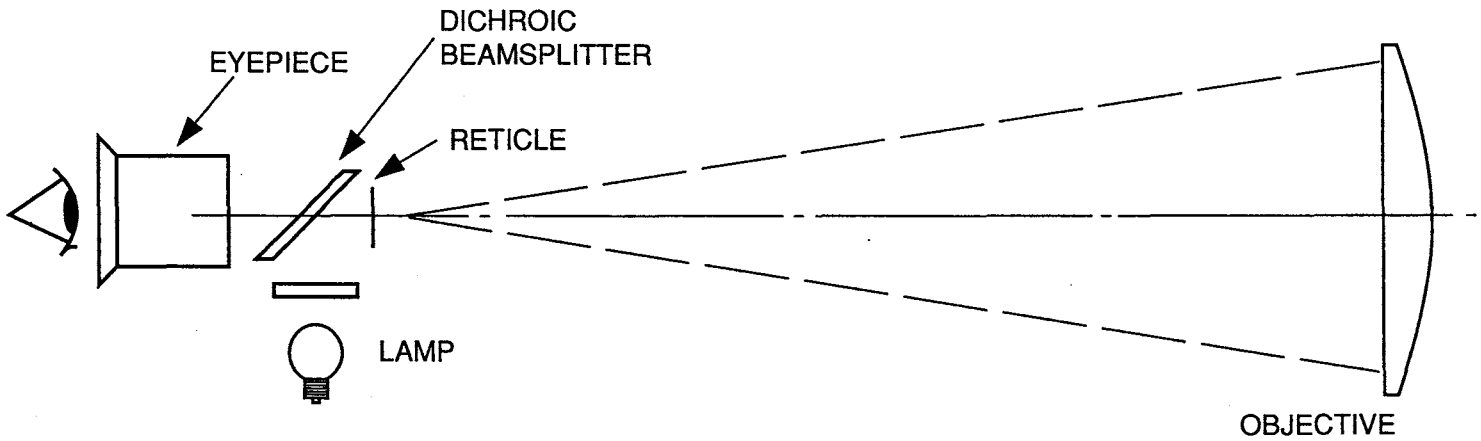

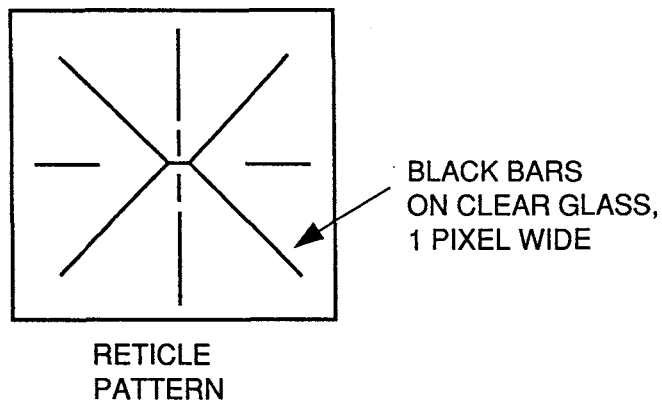

7/91
91-0441-30A