Ocean Color Experiment Ver. 2 (OCE2)

~ Concept Presentations~

Flight Software

Kequan Luu

April 27, 2011

Do not distribute this material without permission
from the Scientific Point of Contact Jay Smith (James.C.Smith@nasa.gov)
or the Programmatic Point of Contact Angela Mason (Angela.J.Mason@nasa.gov)
This document contains sensitive information and is intended for NASA Official Use Only

Agenda

- Electrical Block Diagrams
- Flight Software Requirements
- Conceptual Architecture
- LOC Estimate for SEER Input
- Summary
- Back up charts (estimates, testing, etc.)

Use or disclosure of this data is subject to the restriction on the title page of this document

Electrical Block Diagram

From Electrical Presentation

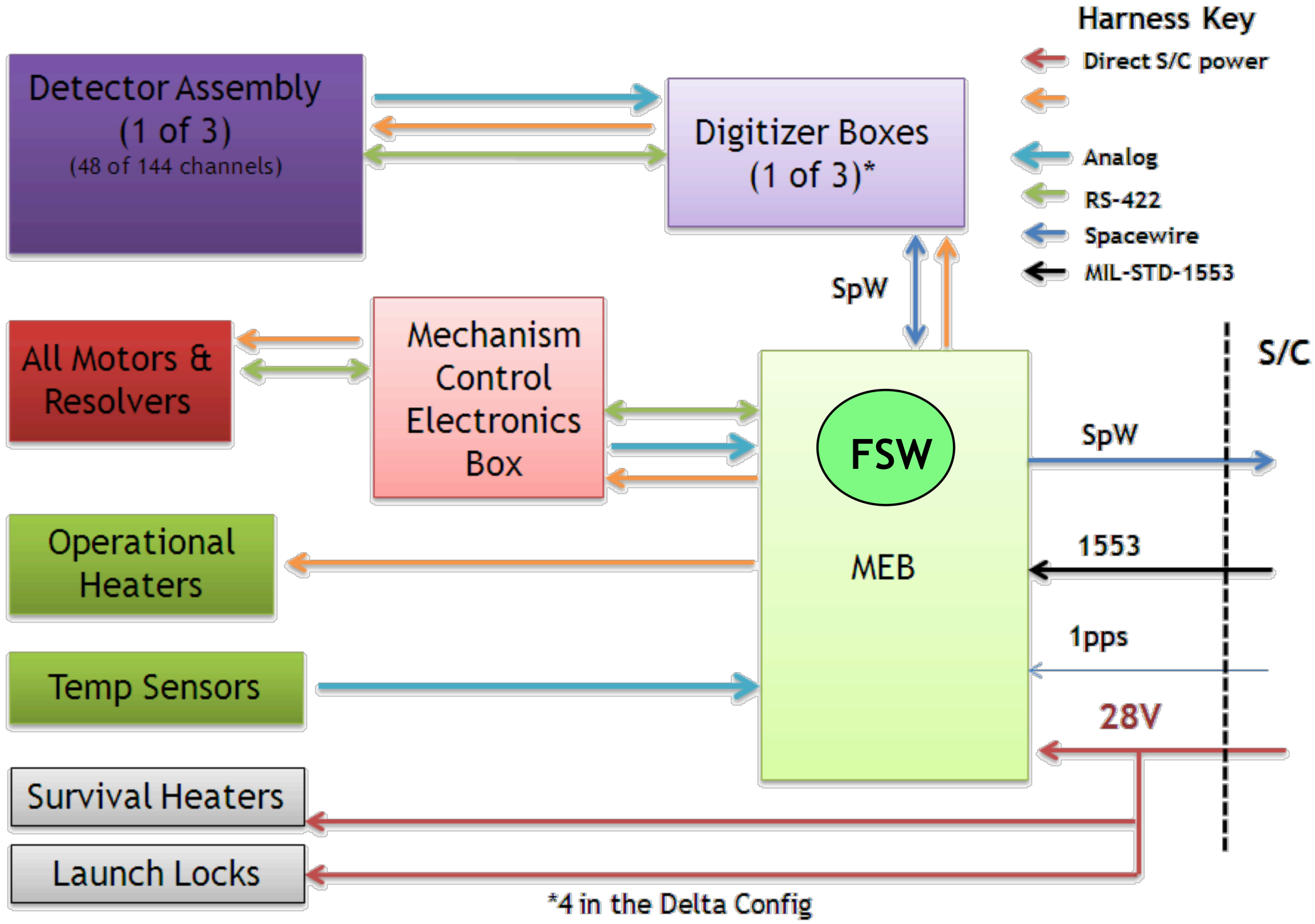

Use or disclosure of this data is subject to the restriction on the title page of this document

Flight Software Requirements

- **Driving Requirements**
  - Mode management (Boot, standby/ engineering, Sun/Moon calibration, Observation, etc.)
  - Time management
    - Keeps real time synch with s/c CDH
    - Timing requirement is 1 ms accuracy
  - Instrument command & configuration
    - Command processing
    - Setup/Control digitizer boards (i.e. 12x close-loop control of integration interval)
    - Collect science/Calibration/HK data and send to S/C, multi-APID support for each data stream
  - 14x PID thermal controllers for detectors @1Hz, , +/-1 degree stability
  - Power switching services for instrument subsystem
  - Mechanisms control (5 mechanisms: Primary and ½ Angle Mirror, Momentum Compensator, Tilt, Calibration)
- **Interfaces**
  - 1PPS (S/C) – time
  - 1553 (S/C) – Instr Command and HK Tlm
  - Digital I/O (Inst) - Heaters, Thermal Sensors
  - RS-422 (Inst) – Mechanisms Control Box
  - Serial I/F (Instr) – Digitizer Box
  - SpaceWire/LVDS – science data to s/c
- **Derived**
  - Bootstrap
  - Diagnostics
  - RTEMS RTOS
  - MEB Software Management (i.e. memory load/ dump, software/table updates)
  - MEB Software Health & Safety
- **NOT Requirements**
  - Science Data Processing: performed by SOC
  - Detectors readout, data integration/aggregation: performed by H/W
  - Compression: performed by H/W
  - Stored Command Processing: performed by S/C
  - Science Data Broadcasting/Recording: performed by S/C
  - Failure Detections & Corrections: performed by S/C

Use or disclosure of this data is subject to the restriction on the title page of this document

MEB Processor Utilization Estimates

	25	16	MHz Coldfire (effective rate)	BAE750(%)	12Mhz ST5/SD	60Mhz LRO
	CPU Percentages			Base Value	0.75	3.75
Component	**50 Mhz**	**32 Mhz**	**Basis of Estimate**			
cFE	0.12	0.19	LRO B2.5 Measured	0.05		0.19
HK Data Storage	0.12	0.19	LRO B2.5 Measured	0.05		0.19
Memory Manager	0.01	0.02	LRO B2.5 Measured	0.01		0.02
Health & Safety	0.17	0.26	LRO B2.5 Measured	0.07		0.26
Stored Commands	0.00	0.00	LRO B2.5 Measured	0.00		0.00
Limit Checker	0.00	0.00	LRO B2.5 Measured	0.00		0.00
Scheduler	1.46	2.29	LRO B2.5 Measured	0.61		2.29
Checksum	0.48	0.75	LRO B2.5 Measured	0.20		0.75
File Manager	0.02	0.04	LRO B2.5 Measured	0.01		0.04
Mode Manager	1.20	1.88	Estimate	0.50		1.88
SpaceWire Control	12.00	18.75	Estimate	5.00		18.75
1553 Control	6.00	9.38	Estimate	2.50		9.38
Power Control	1.20	1.88	Estimate	0.50		1.88
Instrument Support	14.40	22.50	Estimate	6.00		22.50
Solar Model	0.00	0.00	Estimate	0.00		0.00
Mechanisms Control	3.00	4.69	Estimate	1.25		4.69
Thermal Control	8.40	13.13	Estimate	3.50		13.13
Subtotal	**48.59**	**75.92**		**20.24**		

51% Margin

Use or disclosure of this data is subject to the restriction on the title page of this document

MEB FSW Testbed

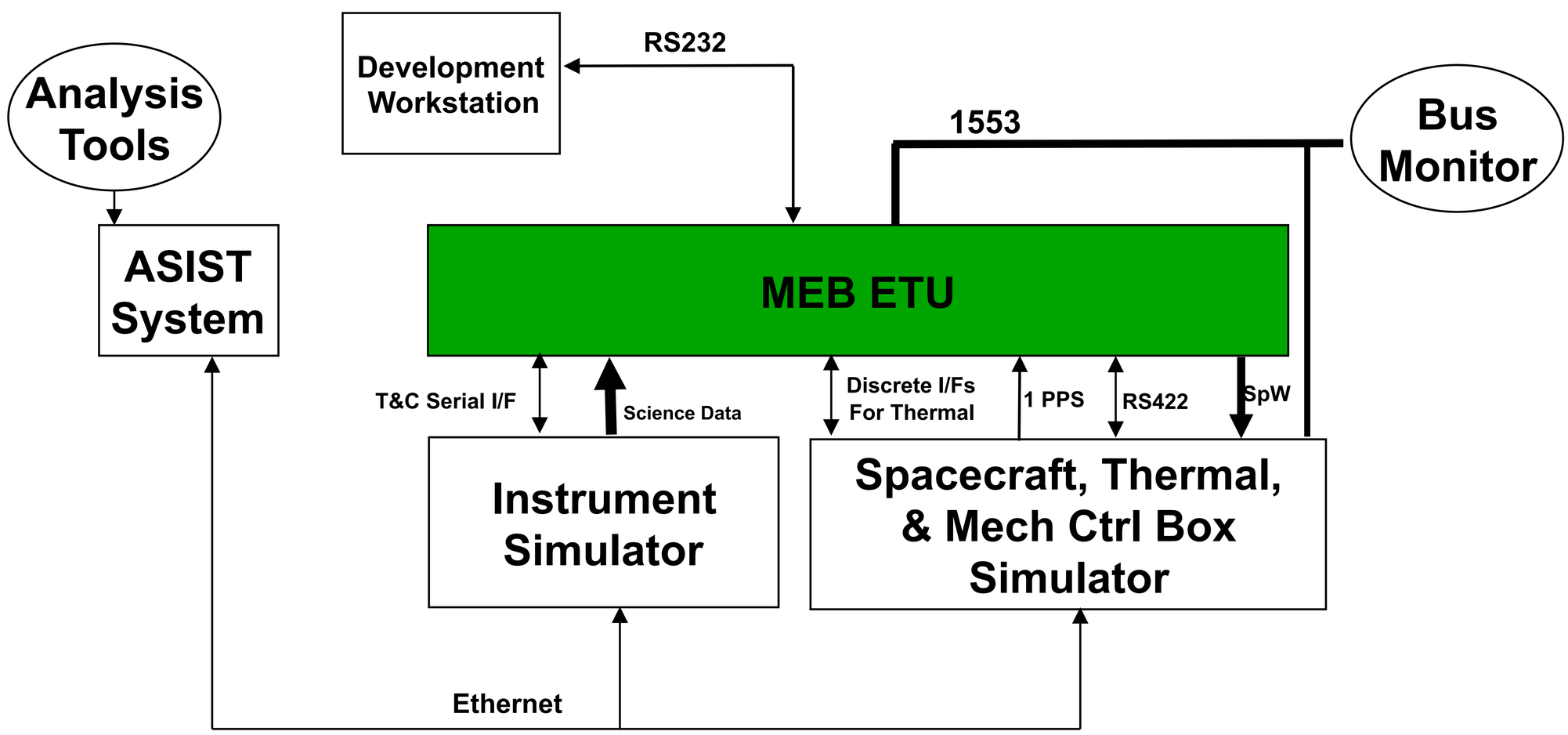

- **Top-Level Requirements:**
  - **Support MEB FSW development**
  - **Support MEB FSW build integration**
  - **Support MEB FSW build test**

Use or disclosure of this data is subject to the restriction on the title page of this document

Basis of Cost Estimate

- **FSW development costs estimated using SEER: System Evaluation & Estimation of Resources**
  - NASA-wide site license for SEER managed by Langley Research Center
  - The IDL made in-house assumptions for FSW re-use and labor effort
  - IDL cannot confidently make assumptions about unknown vendor reuse libraries or control measures, or labor efforts or experience, so we apply GSFC reuse and labor assumptions
  - We assume that other centers or vendors would also have reuse libraries with similar algorithms and reuse/retest ratios
- **The IDL provided a grassroots estimate of the FSW test bed costs**
  - This included the hardware expenses for GSE and the labor to configure and encode the GSE to fully test the FSW

Use or disclosure of this data is subject to the restriction on the title page of this document

Summary and Recommendations

- Line Of Code estimation shows 83% code reuse for MEB
  - High heritage based on GSFC approach
  - As noted on earlier charts, an implementation at another Center or at an experienced Vendor should also take advantage of reuse algorithms, but the specific ratio should be evaluated
- No technical show-stoppers

Use or disclosure of this data is subject to the restriction on the title page of this document