Ocean Color Experiment (OCE2)

Do not distribute this material without permission from Jay Smith/550 (James.C.Smith@nasa.gov)

Mechanisms

Dick McBirney/540 SGT,Inc.

(based on "GOCECP Mechanisms" by Farhad Tahmasebi/544 10/6/2006

With assistance from Ken Lee)

4/26/2012

This study was done as part of a series of ISAL studies for the Advanced Earth Science Mission Concept Studies (AESMCS) for John Loiacono/457

Mechanism Summary

- **There are six mechanisms in OCE2:**
  1. Scan Drum
  2. Half-Angle Mirror
  3. Momentum Compensator
  4. Tilt Linkage
  5. Calibration Assembly
  6. Launch locks on Scan Drum and Tilt Carriage

Do not distribute this material without permission
from Jay Smith/550 (James.C.Smith@nasa.gov)

1. Scan Drum (1/2)

- Requirements
  - Accurate control of angular position vs. time
    - Angular position controlled to ±20 arcsec
  - Scan rate = 369 rpm
  - Continuous operation for mission life of 3 years
  - Direct drive design to support high bandwidth servo loop
- Motor
  - Brushless DC motor with redundant windings: Kollmorgen, Aeroflex, CDA
  - Estimated EOL bearing friction = 136 N-mm (19.2 in-oz)
  - Maximum mechanical power output at 369 rpm = 0.834 watts
  - Assume 50% efficiency; electrical power draw = 0.8/50% = 1.6 watts
- **Angular Position Sensor**
  - Inductosyn® Absolute rotary resolver (*2 needed for redundancy*)
    - 128x and 1x sin/cos outputs digitized by R/D converter
    - 4.16" OD x 0.95" ID x 0.35" width; 5 arcsec accuracy
  - Must include a rotary transformer to pass power to rotating excitation winding
- **The momentum M of the Scan Drum is:**
  - $M = MOI_{drum} * \omega = (1{,}069{,}947\ \text{kg-mm}^2) * (369\text{rpm}) = 41.344\ \text{kg-m}^2/\text{sec}$
- **Bearing friction torque T_f estimate**
  - $= T_f = D/2 * f * \text{load} * 2\ \text{bearings} * 10\ \text{for EOL}$
  - $1\ \text{in} * 0.002 * 30\ \text{lb} * 2 * 10 = 19.2\ \text{in-oz}\ (0.136\ \text{N-m})$

Do not distribute this material without permission
from Jay Smith/550 (James.C.Smith@nasa.gov)

1. Scan Drum (2/2)

- **Primary concern is bearing life:**
  - Scan Tube rotates 0.58 billion revolutions in 3 years
  - Momentum Compensator rotates 2.33 billion revolutions in 3 years
- **SeaWiFS has operated on orbit for 13 years at 360 rpm = 2.05 billion rev**
  - Several design choices made this possible:
    - Use of lubricant reservoirs
    - Low roughness finish on balls and races
  - Other factors that are inherently important to long bearing life:
    - Close machining tolerances on perpendicularity of bearing race seating shoulders
    - Thorough cleaning before assembly in Class 100 Clean Bench
    - Careful assembly to minimize race non-perpendicularity
    - Launch lock must effectively isolate bearings from launch environment

Do not distribute this material without permission
from Jay Smith/550 (James.C.Smith@nasa.gov)

Inductosyn® (1/2)

- http://www.ruhle.com/absolute_rotary_transducer.htm
- http://www.ruhle.com/PDF%20Files/Farrand%20Controls%20Brochure.pdf

Absolute Rotary Inductosyn® Transducer

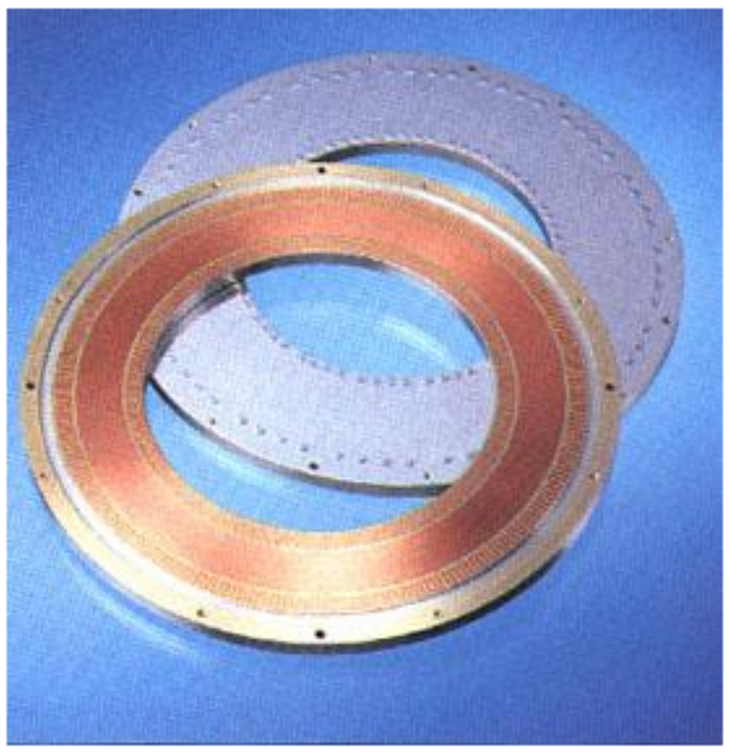

INDUCTOSYN® POSITION TRANSDUCERS, FEATURES AND BENEFITS

An Inductosyn transducer consists of two noncontacting elements, a scale and a slider for the linear transducer, and a rotor and stator for the rotary transducer. Inductosyn position transducers are a "printed circuit" form of electrical resolver. The printed circuit transducer patterns can be produced on almost any substrate material. The patterns are bonded onto the substrate material and the resulting elements are attached to the customer's fixed and moveable system parts. The most common Inductosyn transducer application uses inductive coupling between the moving patterns.

Since 1955, Farrand has manufactured thousands of highly accurate linear and rotary Inductosyn transducers. Applications include robotics, space satellites, submarine navigation systems, antenna pedestals, tracking mounts, telescopes, computer peripheral devices, machine tool control, and many unusual special applications.

HIGH ACCURACY
Inductosyn position transducers satisfy your most demanding position measurement requirements. Standard units have accuracies to:

Linear: ±100 microinches (±0.0025 mm)
Angular: ±1 arc second

Select units have accuracies to:
Linear: Better than ±40 microinches (±0.001 mm)
Angular: Better than ±0.5 arc second

Repeatability is at least 10 times better than rated accuracy in most cases.

NONCONTACTING ELEMENTS
The two elements of a rotary or linear Inductosyn transducer are never in contact and, as a result, have zero wear. The original accuracy is maintained indefinitely and reliability is unsurpassed. No adjustment or lubrication is ever required. In addition, noncontacting elements eliminate backlash and mechanical coupling errors.

OPERATION IN HARSH ENVIRONMENTS
Inductosyn transducers will operate reliably, at full accuracy, in very harsh environments. They can be designed to resist the effects of dust, oil films, vapors, sea water, light radiation, extreme pressure, vacuum, high vibration and shock, and temperatures ranging from 10°K to 160°C.

THERMAL STABILITY
Farrand engineers pioneered bonding techniques to allow the printed circuit transducer patterns to be produced on substrates of almost any material. As a result, Inductosyn components can be manufactured using the same alloys as the corresponding machine parts. This essentially "monolithic" construction in combination with the transducer pattern's configuration assures thermal stability from low cryogenic temperatures of 10°K or below to high temperatures of 160°C or above.

ABSOLUTE & INCREMENTAL POSITIONING DATA
Inductosyn position transducers can provide either incremental or absolute position data. This data is used as input to digital position readouts or precision motion control systems.

AVERAGING OUTPUT SIGNALS
Residual errors in conductor pattern spacing have little effect on Inductosyn output signals. The output signals arise from an average of all spatial cycles for rotary transducers and many spatial cycles for linear transducers.

LINEAR TRAVEL TO 120 FT OR LONGER
Linear Inductosyn transducers are supplied as rigid bars or flexible tapes. Standard 10 inch (254 mm) bars can be mounted end to end to form continuous measuring systems of unlimited length. Continuous tapes to 120 feet (36.6m) or longer, can be supplied. High accuracy is maintained over the entire length.

Do not distribute this material without permission from Jay Smith/550 (James.C.Smith@nasa.gov)

Inductosyn® (2/2)

2 watt power draw according to mfgr

ABSOLUTE ROTARY

SIZE (Notes 1 and 2)		STANDARD ACCURACY		POLES/ SPEED	H	VTR ±20% (Note 4)		AIR GAP	RESISTANCE ±20%			
									STATOR		ROTOR	
STATOR O.D. inches	ROTOR I.D. inches	FINE arc sec	COARSE arc sec or min	2 patterns	(Note 3)	FINE rotor exc.	COARSE rotor exc.	inches	Fine Ohms	Coarse Ohms	Fine Ohms	Coarse Ohms
4.16	0.95	±5	±20 min	256 : 2 128 : 1	0.35	260	1450	0.006	1.5	0.6 ±.2	1.4	2.1
5.00	0.814	±10	±10 sec	128 : 126 64 : 63	0.50	167	194	0.008	0.63	0.49	0.42	0.47
3.00	0.375	±15	±45 min	128 : 2 64 : 1	0.41	460	240	0.006	0.25 ±.1	0.4 ±.1	0.3 ±.1	0.45 ±.1
8.50 (XFMR)	2.125 (XFMR)	±6	±10 sec	256 : 254 128 : 127	0.75	4500	4500	0.008	1.3	1.2	4.0 (XFMR)	
8.2	3.155	±5	±30 min	256 : 2 128 : 1	0.75	100	500	0.008	0.8	0.4	0.8	3.5
8.5	2.562	±1.7	±2.7 sec	512 : 504 256 : 252	0.75	390	800	0.008	1.4	1.7	1.9	2.6
11.0	6.000	±6.5	±12.5 sec	256 : 254 128 : 127	0.76	117	121	0.008	1.5	1.3	0.8	0.9
12.3	5.250	±1.7	±2.0 sec	512 : 504 256 : 252	0.75	152	212	0.008	1.4	1.4	1.5	1.8

TABLE 2

Notes:

1. Standard rotor connections are made by direct wiring or integral rotary transformers. Long life slip rings are available on special order.
2. Outside diameter is concentric with INDUCTOSYN conductor pattern for alignment.
3. Overall installed height of standard unit, not including leads or terminals.
4. Voltage Transformation Ratio (VTR) is the ratio of input voltage to maximum open circuit output voltage, measured at 10 KHz with the specified air gap. Output voltage increases directly as frequency increases. Operation at carrier frequencies above 100 kHz or below 2.5 kHz is not recommended.

Do not distribute this material without permission from Jay Smith/550 (James.C.Smith@nasa.gov)

2. Half-Angle Mirror

- Requirements
  - Must accurately synchronize its angular position to Scan Tube position
    - Required angle synchronization accuracy: 15 arcsec
  - rotates at precisely -1/2 of Drum speed = -184.5 rpm
  - Continuous operation for mission life of 3 years = 2.9 * 10^8 rev
  - Direct drive design to support high bandwidth servo loop
- Motor
  - Brushless DC motor with redundant windings
  - Estimated bearing friction = 23 N-mm (3.2 in-oz)
  - Maximum mechanical power output at 184.5 rpm = 0.07 watts
  - Assume 50% efficiency; electrical power draw = 0.07/50% = 0.14 watts
- Angular Position Sensor
  - Inductosyn® Absolute resolver (same as Scan Drum) (*2 needed for redundancy*)
    - 4.16" OD x 0.95" ID x 0.35" width; 5 arcsec accuracy
    - Need to include a rotary transformer to pass power to rotating winding
  - ***If the MOI on the Half Angle Mirror shaft were increased to half of the Scan Tube MOI, the Momentum Compensation mechanism could be eliminated.***

  - Fric torq = D/2 * f * load * 2 bearings *10 for EOL
  - 1 in * 0.002 * 5 lb * 2*10 = 3.2 in-oz (23 N-mm)

Do not distribute this material without permission
from Jay Smith/550 (James.C.Smith@nasa.gov)

3. Momentum Compensator (1/2)

- **Requirements**
  - Angular speed must bring net momentum vector to less than TBD to reduce demand on satellite ACS.
  - Angular speed = -4 * 369 rpm = -1,476 rpm
  - Continuous operation
  - Rotates 2.33 billion revolutions in 3 years
  - Direct drive to support high bandwidth servo loop
- **Motor**
  - Brushless permanent magnet motor with redundant windings
  - Estimated bearing friction = 136 N-mm (19.2 in-oz)
  - Maximum mechanical power req'd at 1,476 rpm = 3.34 watts
  - Assume 50% efficiency; electrical power draw = 3.34/50% = 7 watts
- **Position readout**
  - Resolver (*2 needed for redundancy*)
    - 1x and 16x windings
    - Need to include a rotary transformer to pass power to rotating winding

    - Bearing friction torque = D/2 * f * load * 2 bearings *10 for EOL
    - 1 in * 0.002 * 30 lb * 2*10 = 19.2 in-oz (0.136 N-m)

Do not distribute this material without permission
from Jay Smith/550 (James.C.Smith@nasa.gov)

3. Momentum Compensator (2/2)

- Momentum Compensation flywheel is nominally sized to have 25% of the mass MOI of the Scan Drum.
- So the angular speed of the flywheel must be nominally 4x the speed of the Scan Drum:
  - 4 x 369 rpm = 1,476 rpm
- The flywheel is presently made of stainless steel and is a simple constant thickness disc:
  - it could be made with a heavy rim and thin web to save weight while maintaining its MOI.
  - Its size could be increased to lower the required speed.

Do not distribute this material without permission
from Jay Smith/550 (James.C.Smith@nasa.gov)

4. Tilt Linkage (1/2)

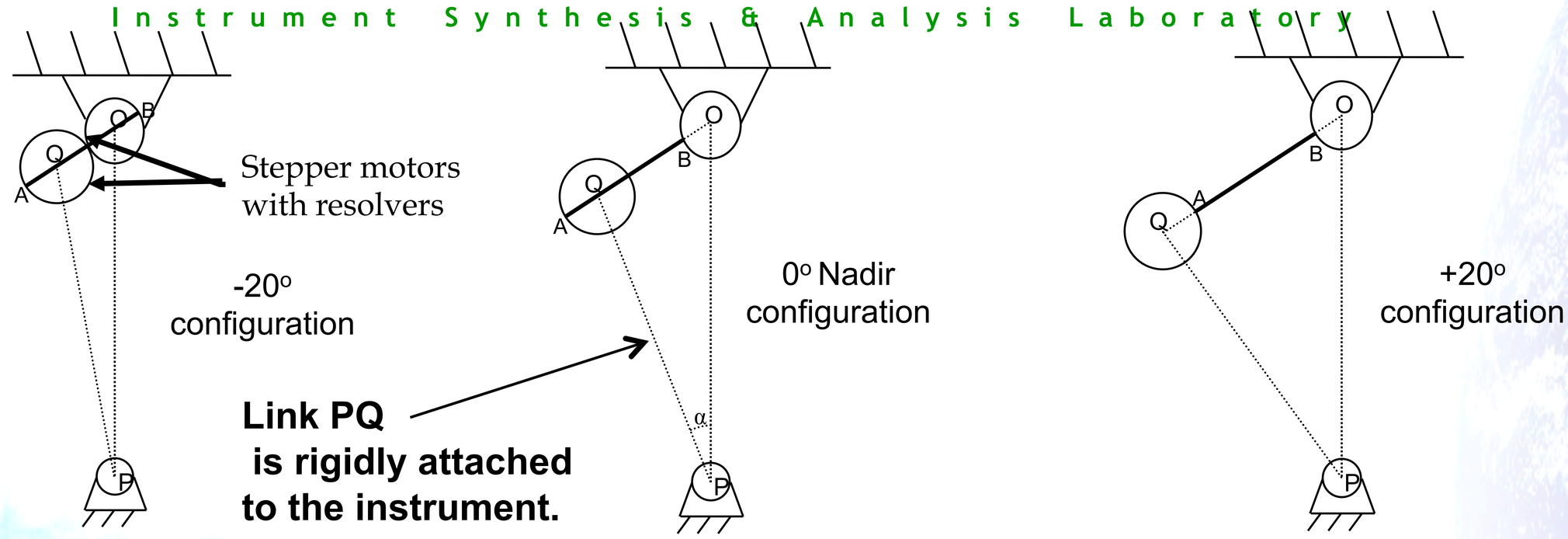

- **REQUIREMENT: Must tilt instrument to 0º, +20º and -20º, ±15 arcsec**
- **Principle of operation:**
  - Link AB is hinged to cranks O and Q at points A and B.
  - The motor at O is fixed on the cradle. The motor at Q is moving with the rest of the instrument. The tilt axis passes through P.
  - Similar mechanism was used on SeaWiFS.
  - At all three angles, cranks O and Q are in toggle positions, so *even large stepper motor errors produce very minor (cosine) errors in the tilt position of the instrument*.
- ***All bearings must be angular contact ball bearings, preloaded to eliminate backlash; at 886mm (35“) tilt arm radius, ±15 arcsec = ±0.06mm (±0.0025”)***

Do not distribute this material without permission
from Jay Smith/550 (James.C.Smith@nasa.gov)

4. Tilt Linkage (2/2)

- **Tilt motors (2)**
  - Stepper motors with 200:1 gearboxes and redundant windings
  - Duty cycle: 52 seconds per orbit (orbit = 97.72 minutes)
  - Time allowed for 20° motion = 13 seconds
  - Estimated bearing friction = 8 in-oz (0.056 N-m) - SeaWiFS heritage
- **Resolver (one per motor)**
  - 1x and 16x outputs to R/D converter
  - Need to include a rotary transformer to pass power to rotating winding

Do not distribute this material without permission
from Jay Smith/550 (James.C.Smith@nasa.gov)

5. Calibration Target

- **Requirements**
  - Position accuracy: ±0.1°
  - Duty cycle: Maximum of 40 seconds per month
  - Time allowed for 90° motion = 10 seconds
- **Motor**
  - Estimated bearing friction = 8 in-oz (0.056 N-m)
  - Stepper motor/resolver with a 100:1 gearhead, and redundant winding
- **Resolver**
  - 1x and 16x outputs to R/D converter
  - Need to include a rotary transformer to pass power to rotating winding

Do not distribute this material without permission
from Jay Smith/550 (James.C.Smith@nasa.gov)

6. Launch Locks

- **Launch Lock on the Tilt Mechanism**
  - Tilt LL must hold 150 kg
  - Needed to pass launch loads from tilting cradle to stationary structure
  - Released by a HOP (High Output Paraffin) actuator
  - [structure comment - we should add gussets on the tilt cradle to improve stiffness and resonant frequency]
- **Launch Lock on the Scan Tube**
  - Needed to pass launch loads from Scan Tube to tilting cradle
  - Released by a HOP (High Output Paraffin) actuator
- **Requirements**
  - *Both Tilt and Scan locks must isolate dynamic launch loads from critical, preloaded ball bearings without imposing additional static loads on those bearings over the expected temperature range before launch.*

Do not distribute this material without permission
from Jay Smith/550 (James.C.Smith@nasa.gov)

Mechanism Controller Requirements

- **1. Scan Tube**
  - Rotates at 6.15 rev/sec (= 369 RPM) continuous
  - Position error budget is 0.108 mrad (22.3 arcsec) peak from the nominal.
- **2. Half Angle Mirror**
  - Rotates at -184.5 RPM continuous and maintains phase synch with the Primary Mirror.
  - Position error budget with respect to the Primary Mirror is 0.108 (22.3 arcsec) mrad peak.
- **3. Momentum Compensator**
  - Net Momentum Compensator mass rotates at nominally 4 x 369 = 1,476 RPM continuous to compensate the momentum generated by the Scan Tube and Half-Angle mirrors.
- **4. Tilt Mechanism**
  - Two stepper motor/gearboxes are used independently to tilt the OCE instrument +/- 20 degrees within 13 sec. and achieve precise positioning at +20, 0 and -20 degrees. Step size of gearbox output is 0.0625°. The effect of these steps on the OCE tilt angle is nonlinear, but provides accurate tilt angles at ends of 180 degree travels.
  - Must be able to operate 2 Motors simultaneously.
  - Provide tilt position knowledge accurate to ± 15 arcsec = ± 0.004 deg.
- **5. Calibration Mechanism**
  - Move 120 degrees in 10 sec.
- **6. Launch Locks**
  - Provide Launch Lock control for Scan Tube.
  - Provide Launch Lock control for Tilt Mechanism.

Do not distribute this material without permission
from Jay Smith/550 (James.C.Smith@nasa.gov)

Mechanism Controller (1/3)

- **Common Features for both Scan Drum and Half Angle Mirror Drives**
  - Use FPGA controller to close the mechanism control loop to achieve design flexibility through software for both the Scan Drum and Half Angle Mirror.
  - For ground calibration, Incorporate independent stationary static position control of both Drum and Mirror.
  - Use Inductosyn resolvers for position knowledge and motor commutation.
  - Achieve high closed loop bandwidths to give good disturbance rejection (unbalance in 1g, bearing torque variations) for both the Scan Drum and Half Angle Mirrors.
  - Provide out-of-lock detection capability.

Do not distribute this material without permission
from Jay Smith/550 (James.C.Smith@nasa.gov)

Mechanism Controller (2/3)

- **Scan Drum Assembly**
  - Ramp up the Scan Drum speed slowly to minimize transient effects until desired speed is reached.

    Switch to PLL controller and acquire phase-lock to the 0.1 μsec resolution command clock (using 10 MHz counter clock)
    - The phase error contribution from the command clock shall be less than 0.2%.
    - The 11th bit of the R/D converter output is used to phase lock.
  - Absolute Drum position used to initiate integration at each pixel.
- **Half Angle Mirror**
  - Ramp up the Half Angle Mirror speed, then frequency-lock to the Scanning Mirror to pull within the phase-lock range.

    Switch to PLL controller and acquire phase-lock to the same command clock as the Scanning Mirror.
    - 12th bit of the R/D converter output is used for the phase lock.

Do not distribute this material without permission
from Jay Smith/550 (James.C.Smith@nasa.gov)

Mechanism Controller (3/3)

- **Momentum Compensator**
  - Ramp-up and switch to PLL to maintain the nominal speed of 4x the Drum speed.
- **Tilt and Calibration Mechanisms**
  - Use geared stepper motors with redundant windings
  - Use resolvers and R/D converters with 12-bit resolution
  - Use HOP pin puller for the launch lock
  - Provide end-of-travel detection using resolver outputs

Do not distribute this material without permission
from Jay Smith/550 (James.C.Smith@nasa.gov)

Scan, Half Angle and Compensator Control

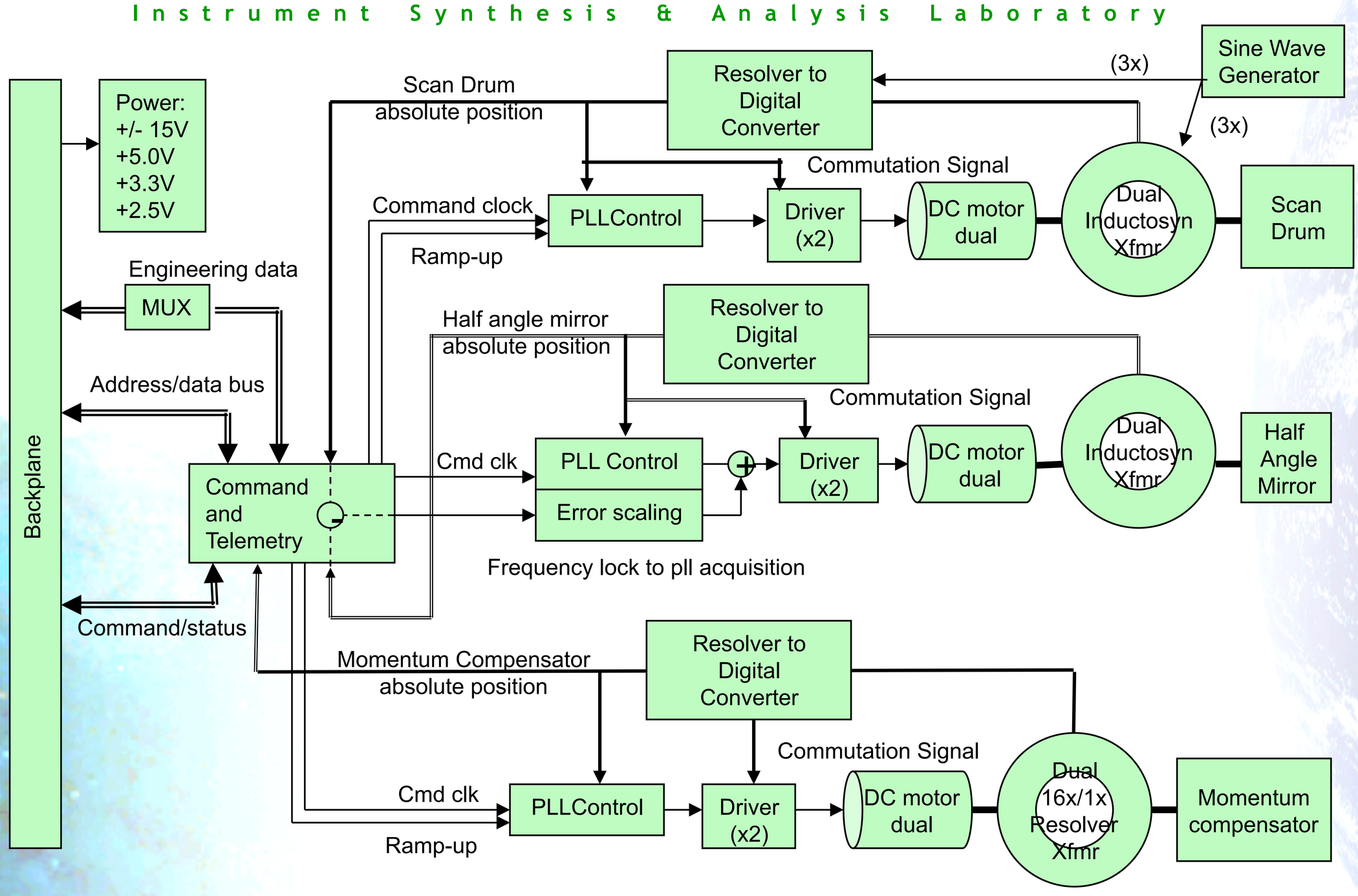

Do not distribute this material without permission
from Jay Smith/550 (James.C.Smith@nasa.gov)

Tilt and Calibration Control

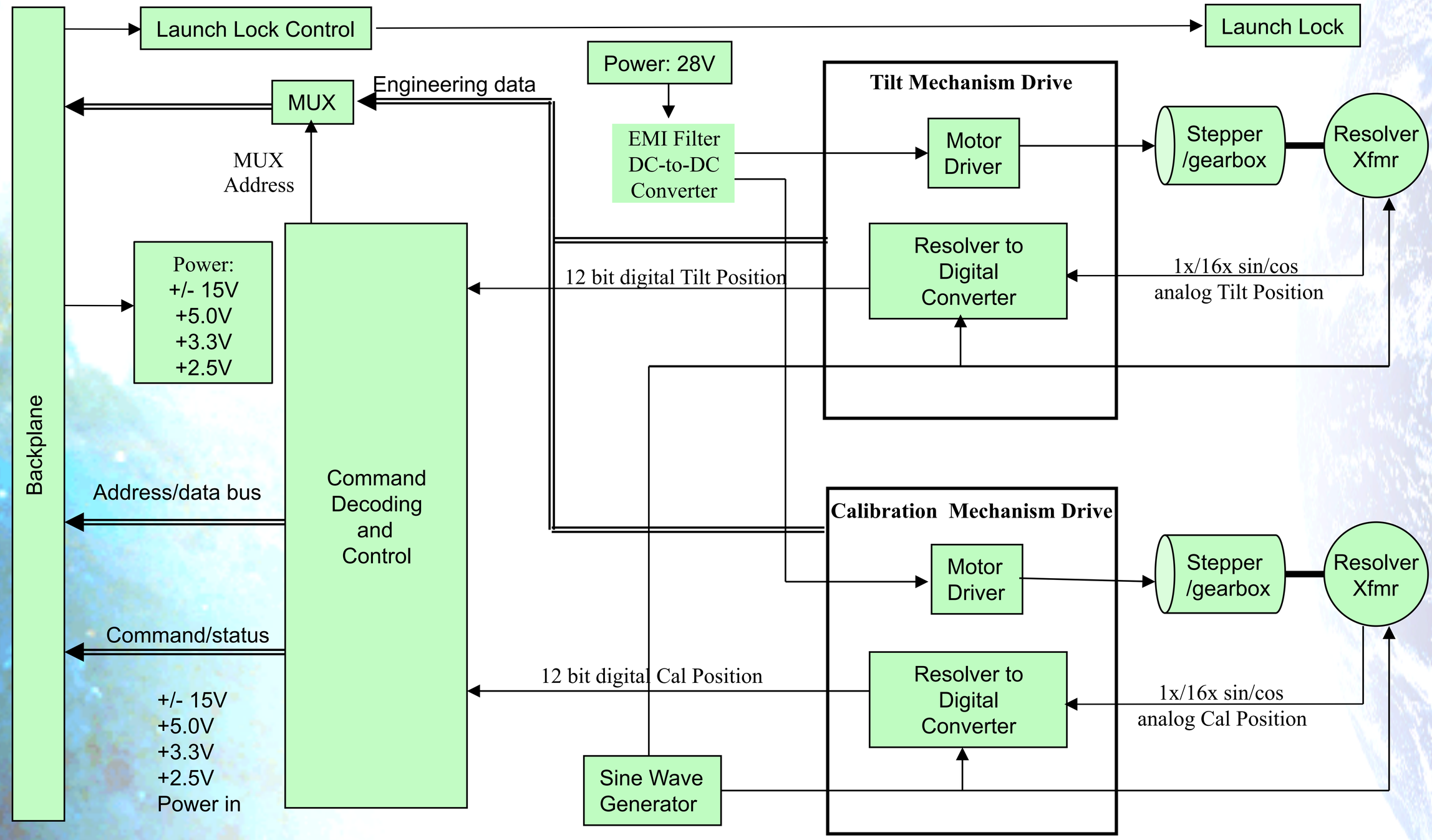

Do not distribute this material without permission from Jay Smith/550 (James.C.Smith@nasa.gov)

Estimated Circuit Board Requirement

- **One 6U Controller board for brushless DC motors**
  - Scan Tube
  - Half Angle mirror
  - Momentum Compensator
  - Includes A-Side/B-Side redundant circuits
- **One 6U Controller board for stepper motors**
  - Tilt linkage motors
  - Calibration motor

Do not distribute this material without permission
from Jay Smith/550 (James.C.Smith@nasa.gov)

Mechanisms harness mass

					mass,kg/m	0.0032
Component	**Lead count**	**redundancy**	**Total lead count**	**length, m**	**total length, m**	**total mass, kg**
BDCM Scan motor	8	2	16	1.6	25.6	0.08192
Scan Inductosyn	6	2	12	1.6	19.2	0.06144
BDCM Half angle motor	8	2	16	1.4	22.4	0.07168
Half angle Inductosyn	6	2	12	1.4	16.8	0.05376
BDCM Mom Comp motor	8	2	16	1.6	25.6	0.08192
Mom comp resolver	6	2	12	1.6	19.2	0.06144
Tilt mech stepper motor	6	1	6	1.4	8.4	0.02688
Tilt mech resolver	6	1	6	1.4	8.4	0.02688
Cal Stepper motor	6	1	6	1	6	0.0192
Cal resolver	6	1	6	1	6	0.0192
Scan Tube launch lock	2	1	2	2	4	0.0128
Tilt Mech launch lock	2	1	2	2	4	0.0128
				Totals	**157.6**	**0.50432**

Unit lead mass estimated at (22 AWG 514 ft/lb + 10% for insulation)

Do not distribute this material without permission
from Jay Smith/550 (James.C.Smith@nasa.gov)

Mechanisms Electrical Power Estimate

Mechanism	Component	Startup Power, watt	Duty cycle	Avg power, watts
1. Scanning Telescope	Motor	50	100%	1.6
	Inductosyn	2	100%	2
2. Half Angle Mirror	Motor	20	100%	0.14
	Inductosyn	2	100%	2
3. Momentum Compensator	Motor	50	100%	7
	Resolver	5	100%	5
4. Tilt Linkage	Stepper Motor1	10	1%	10
	Resolver1	5	1%	5
	Stepper Motor2	10	1%	10
	Resolver2	5	1%	5
5.Cal Assy	Stepper Motor	10	1%	10
	Resolver	5	10%	5
6.Launch Locks	HOP Actuator	50	0%	0

Do not distribute this material without permission
from Jay Smith/550 (James.C.Smith@nasa.gov)

Bearing Life Risks can be minimized

- **Primary concern is bearing life:**
  - Scan Tube rotates 0.58 billion revolutions in 3 years
  - Half Angle Mirror rotates 0.29 billion revolutions in 3 years
  - Momentum Compensator rotates 2.33 billion revolutions in 3 years
- **But - the SeaWiFS Scan Tube has operated on orbit for 13 years at 360 rpm…**
  - …and has survived 2.05 billion revolutions
- **And the SeaWiFS Momentum Compensator has endured 13 years at 24 rev/sec…**
  - …and has survived 61.8 billion revolutions
- **Several design choices made this possible:**
  - Meldin 9000 lubricant reservoirs replenish consumed lubricant,
  - Labyrinths and barrier films contained the lubricant,
  - low roughness finish on balls and races minimized lubricant usage,
  - And extensive life testing proved the design.
  - Other unstated but important factors must also be controlled:
    - Precision machining of bearing race locating shoulders
    - Precision cleaning and assembly on Class 100 bench
    - Careful assembly to ensure perpendicularity of bearing races to axis
    - Proper launch lock design to isolate bearings from launch vibration – without inducing static loads
  - In addition, there have been state-of-the-art changes from 1991 that we can use:
    - Use of ceramic balls will enhance lubricant life.

Do not distribute this material without permission
from Jay Smith/550 (James.C.Smith@nasa.gov)

Suggested Future Activities

- **Life test plan of the bearings**
  - Bearing life is a risk area.
  - GSFC golden rules require a life test equivalent to 6 years for a 3 year mission.
  - We should start vibration and vacuum life testing as soon as possible.
  - Accelerating these life tests may be possible.
- **FPGA modular firmware development will have been completed for previous and current flight projects; examples: TIRS, GPM, ICESat. Additional development costs for OCE2 will be minimal.**

Do not distribute this material without permission
from Jay Smith/550 (James.C.Smith@nasa.gov)

Backup Slides

- Bearing friction torque
- Slides showing bearing design from SeawiFS CDR 1991

Do not distribute this material without permission
from Jay Smith/550 (James.C.Smith@nasa.gov)

Bearing friction torque

The bearing friction torque $M_r = F \cdot f \cdot (d/2)$
alternatively ..
The bearing friction torque $M_r = F \cdot f_m \cdot (D_m/2)$
(friction values below marked with ***)

- These values relate to running bearings without seals and with optimimum lubrication..
The start-up friction values will be higher -up to twice the values quoted below..

The bearing friction torque $M_r = F \cdot f \cdot (d/2)$
alternatively ..
The bearing friction torque $M_r = F \cdot f_m \cdot (D_m/2)$
(friction values below marked with ***)

- M_r = Friction torque (N-mm)
- F = Radial (or axial load) (N)
- f = coefficient of friction of rolling bearing .
- f_m = coefficient of friction of rolling bearing based on mean diameter
- d = Diameter of the bore of the bearing (Shaft diameter)(mm)
- D = Outside diameter of the bearing (mm)
- D_m = (d+D)/2 (mm)

These values relate to running bearings without seals and with optimimum lubrication..The start-up friction values will be higher -up to twice the values quoted below..

- Single row ball bearing (radial Load) ..f = 0,0015
- Angular contact ball bearing (single row) ..f = 0,0020
- Angular contact ball bearing (double row) ..f = 0,0024
- Self aligning ball bearing (radial load) ..f = 0,0010
- Cylindrical roller bearings with cage ..f = 0,0011
- Cylindrical roller bearings full complement ..f = 0,0020
- Thrust ball bearing (axial load) ..f = 0,0013
- Spherical roller bearing (radial Load) ..f = 0,0018
- Taper roller bearings ..f = 0,0018
- Needle roller bearings-with cage ..f_m = 0,003
- Needle roller ball bearings-full Complement ..f_m = 0,005
- Combined needle roller bearings ..f_m = 0,004
- Axial Needle roller ball bearings ..f_m = 0,0035
- Axial Cylindrical roller bearings ..f_m = 0,0035

Do not distribute this material without permission
from Jay Smith/550 (James.C.Smith@nasa.gov)

From SeawiFS CDR 1991 - 1/6

- SeawiFS Scanner has endured 2 billion rev over 13 years

• FIVE YEAR LIFE — 1 BILLION REVOLUTIONS AT 360 RPM

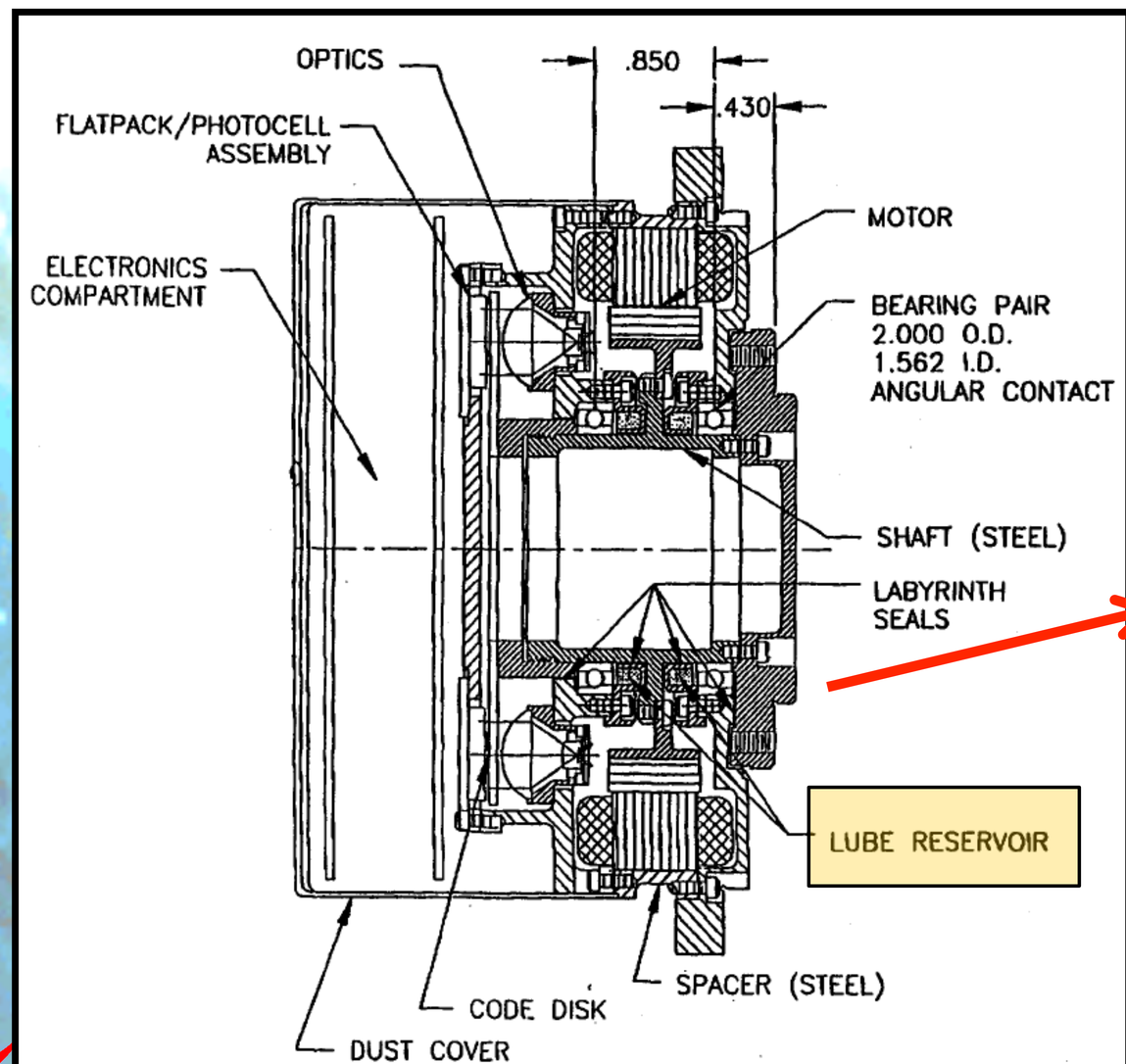

360 rpm *5 years = 9.467*10^8 rev

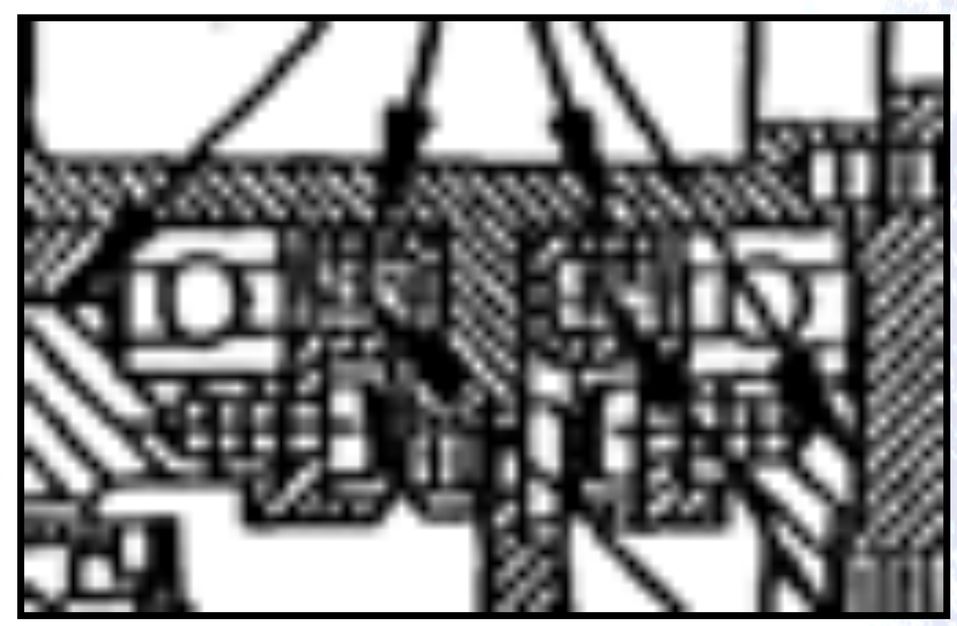

< NOTE!

• LUBRICANT: PENNZANE

Do not distribute this material without permission
from Jay Smith/550 (James.C.Smith@nasa.gov)

From SeawiFS CDR 1991 - 2/6

- SeawiFS Momentum Compensator has endured 61.8 billion rev over 13 years

24 rev/sec*13 yr
= 61.8 billion rev

MOMENTUM COMPENSATOR: SPECIFICATIONS

HUGH
SANTA BARBARA RESEARCH
a s

- FIVE YEAR LIFE — 4 BILLION REVOLUTIONS AT 24 RPS
- ANGULAR MOMENTUM OF 53 OZ-IN-SEC ± 10% (BY TRIMMING)

BEARING LIFE REQUIREMENT IS 1 BILLION ROTATIONS

HUGHE
SANTA BARBARA RESEARCH CEN
a subs

REQUIREMENTS

REQUIREMENT	TELESCOPE	HALF ANGLE MIRROR
MOTION	360° CONTINUOUS	360° CONTINUOUS
SPEED	360 RPM	180 RPM
LIFE	5 YEARS (9.5×10^8 REVS)	5 YEARS (4.7×10^8 REVS)

Do not distribute this material without permission
from Jay Smith/550 (James.C.Smith@nasa.gov)

From SeawiFS CDR 1991 - 3/6

BEARING SELECTION WAS BASED ON HUGHES SPACE AND COMM EXPERIENCE WITH COMMUNICATION SATELLITES

HUGH

SANTA BARBARA RESEARCH C
a su

BOTH MECHANISMS WILL USE THE SAME BEARINGS AND LUBRICANTS

BEARING SELECTION WAS DONE BY BEI WITH HAC SBRC AND SCG CONSULTATION

BEARINGS ARE THIN SECTION, GRADE 7T ANGULAR CONTACT BALL BEARINGS:

- 2.00 OD, 1.562 ID RACES OF 440-C ALLOY
- 34 EACH 0.125 IN. DIA. GRADE 5 BALLS OF 440-C ALLOY
- 52% BALL-TO-RACE CONFORMITY
- 3.0 AND 0.8 MICROINCH AA FINISH ON RACES AND BALLS
- 26 POUND, FIXED PRELOAD
- TEFLON TOROID SEPARATORS ON ALTERNATE BALLS
- MELDIN 9000 MICRO POROUS POLYIMIDE LUBRICANT RESERVOIRS

Do not distribute this material without permission
from Jay Smith/550 (James.C.Smith@nasa.gov)

From SeawiFS CDR 1991 - 4/6

LUBRICANT	VACUUM	LUBRICITY	ADDITIVES	RISKS
PENNZANE 2000	VERY GOOD	VERY GOOD	VERY GOOD	NO FLIGHT EXP TORQUE?
DEMNUM FLUID	EXCELLENT	FAIR	POOR	ERRATIC LIFE NO FLT EXP
BRAY 815-Z	EXCELLENT	POOR	POOR	ERRATIC LIFE
APIEZON C	GOOD	EXCELLENT	VERY GOOD	OUTGASSING REQUIRES HEATERS
CORRY 55 ETC.	POOR	EXCELLENT	VERY GOOD	OUTGASSING REQUIRES HEATERS

LUBRICANT SYSTEM SELECTION

- NYE 2001 OIL (PENNZANE 2000 WITH ANTI-OXIDANTS AND ANTI-WEAR ADDITIVES
- USE MELDIN 9000 MICRO POROUS OIL RESERVOIRS
- USE BARRIER COATING TO CONTAIN THE OIL
- USE LABYRINTHS TO CONTAIN THE OIL

Do not distribute this material without permission
from Jay Smith/550 (James.C.Smith@nasa.gov)

From SeawiFS CDR 1991 - 5/6

THEORETICAL BEARING LIFE APPROACHES 100 YEARS

HU

SANTA BARBARA RESEA

SPEED	FLUID	FATIGUE LIFE	F.L. + EHD	LAMBDA
180	BRAY 815-Z	74 YEARS	32 YEARS	0.95
360	BRAY 815-Z	36 YEARS	60 YEARS	1.53
180	PENNZANE	74 YEARS	178 YEARS	2.65
360	PENNZANE	36 YEARS	100 YEARS	4.28

BASED ON 99% RELIABILITY / BEARING

Do not distribute this material without permission
from Jay Smith/550 (James.C.Smith@nasa.gov)

From SeawiFS CDR 1991 - 6/6

ACCELERATED LIFE TEST PLAN WILL PROVIDE EARLY WARNING OF A PROBLEM

HUGHES

SANTA BARBARA RESEARCH CENT
a subsidi

- THREE GROUPS OF BEARINGS ARE PLANNED TO BE TESTED AT THREE DIFFERENT TEMPERATURES AND SPEEDS IN A VACUUM ENVIRONMENT
- BASELINE IS ROOM TEMPERATURE AT 180 RPM
- AT EACH OF THE OTHER TWO ELEVATED TEMPERATURES WE WILL INCREASE ROTATION SPEED UNTIL WE ACHIEVE THE SAME LAMBDA AS WE HAVE IN THE BASE LINE. THE RATIO OF SPEEDS WILL BE THE LIFE TEST ACCELERATION FACTOR.

Do not distribute this material without permission
from Jay Smith/550 (James.C.Smith@nasa.gov)